Fincantieri SI S.P.A.
Via Genova, 1
34121 Trieste - Italy

T +39 040 3192316
F +39 040 3192461

FINCANTIERI SI
evolving integration

File: 8017EDDF03042

Received specifications or drws.	Supplier doc. Number	Fincantieri SI doc. number
BS integration supply specification		8017EDDF03042

Alt.	Date	Signed	Issued for Projects	Alteration description
Rev.0	16/04/2019	AR	8017	Prima emissione

Date	**Gennaio 2019**		**Job**	**Hull**
			8017	**6136**
Issued by FINCANTIERI SI evolving integration		**Quadro Power Unit – Manuali Componenti Principali**	Issued also for: Job / Hull	
			8017	**6137**
Approved by	D.Mondo DM	Drwg number	**8017EDDF03042**	
Checked by	S.Casini SC	Alteration Item	**0**	
Issued by	A.Retti AR		Enclosed sheets:	636

This document is the property of Fincantieri SI - Trieste. It shall not be used, reproduced or communicated to unauthorized persons

- INDICE……2
- ELENCO DEI MANUALI DEI COMPONENTI PRINCIPALI……..3

Con riferimento allo schema elettrico dei quadri (doc. 8017EEDF03002):

Componente	*Foglio*	*Sigla*	*Numero Documento*	*Descrizione*	*Pagine*
Cooling Unit	200	C1	DPD01308D	HXM120 Commissioning and Maintenance Manual	66
			VL39-5030-10 rev.b	HXM120 AISI 304 Piping P&ID	1
			VL39-5035 rev.L	HXM120 Electrical Diagram	11
Converter	10, 11, 12	U1, U2	DPD00887E	NX Liquid cooled Drives User Manual	239
Insulation Monitoring Device	10, 11, 12	A1.1, A1.2	Iso685-x_D00022_07_M	Manual	60
DC Switch	10, 11, 12	S4.1, S4.2	M-DFM_rev.02_I	Manuale operativo	42
AC Switch	10, 11, 12	S2.1, S2.2	NVE35470-02	Manual	64
Auxiliary Transformer	10, 101	T3	IOMLVTRF2015	Installation, operation , maintenance guide	9
PLC Cards	300	CPUS1	NT255	Hardware Manual Power supply Modules	6
	300	CPUS2	MC21x	Hardware Manual Processor Module	9
	300	CPUS4	EM2xx	Hardware Manual Ethernet Master	8
	300	CPUS6	SLC284	Hardware Manual Safety processor module	19
	350, 400	R1S1, R2S1	MX2xx/x	Hardware Manual Processor module	12
	350, 400	R1S3, R2S3, R2S4, R2S5, R2S6, R2S7	DI2xx/x	Hardware Manual Digital Input Modules	19
	350	R1S4, R1S5, R1S7	DOR206/230	Hardware Manual Digital Relay Output Module	15
	350	R1S6	AIO208/216	Hardware Manual Input/Output Modules	53

VACON® NX

AC DRIVES

HXM120 COOLING UNIT, SS-PIPING

COMMISSIONING AND MAINTENANCE MANUAL

VACON®

QUICK START-UP GUIDE

THE FOLLOWING STEPS OF THE QUICK START-UP GUIDE MUST BE PERFORMED DURING THE INSTALLATION AND COMMISSIONING.

If any problems occur, contact your local distributor.

1. Check that the delivery corresponds to your order.
2. Before starting commissioning, read carefully the safety instructions in Chapter 1 SAFETY.
3. Check that the specified installation location and ambient conditions comply with the specification. Refer to Chapter 4.3.2 Required ambient conditions.
4. Any customer made piping must be thoroughly flushed before connecting to the HX-unit.
5. Check that the liquid quality is approved. Refer to Chapter 4.3.1, Liquid quality.
6. Connect the mechanical and electrical couplings. Refer to Chapter 5.1.3, Pipe connections and 5.2 STEP 2, ELECTRICAL PART.
7. Adjust the HX control unit parameters to match the specific project requirements. Refer to Chapter 5.3.2, Application parameter list.
8. Perform a pressure test to the primary circuit and secondary circuit connections. Refer to Chapter 5.1.5, Pressure test.
9. Add coolant to the circuits and de-air them according to the instructions in 5.1.7, Adding liquid and de-airing.
10. Adjust the primary circuit flow and temperature to match the project requirements. Refer to Chapter 5.4.2, Adjusting the system flow and setting the switch point of the FTSA11.
11. Do not energize the main drives before the HX-unit has been running for 30 min without any alarms. Refer to the Chapter 5.4.3, Checklist before starting main NX drives.

Vacon Ltd is not responsible for the use of its products contrary to these instructions.

ABOUT THE VACON® HX-UNIT MANUAL

The Commissioning and Maintenance Manual provides you with the necessary information about the maintenance and commissioning of a VACON® HX-unit. We recommend that you carefully study these instructions before powering up a VACON® liquid-cooled drive and HX-unit for the first time.

This manual is available both in paper and electronic editions. We recommend you use the electronic version if possible. If you use the electronic version, you benefit from the following features:

- The manual contains several links and cross-references, which make it easier for the reader to move around in the manual, to check and find things faster.
- The manual contains hyperlinks to web pages. To visit these web pages through the links, you must have access to the Internet and have an Internet browser installed in your computer.

VOCABULARY

Primary circuit, HXM120-PS01	A closed circuit filled with coolant that connects the drive to the HX-unit.
Secondary circuit, HXM120-PS02	A circuit filled with coolant that connects the HX-unit to the customer piping.
HX-unit	HXM120 cooling unit (see the front picture of the manual). The ordering code for the unit on the front page is HXM-M-120-N-S, but it is referred to as HXM120 or just plain HX-unit for short.
Drive	Liquid cooled AC drives or inverters that are connected to the HX-unit.
Main drive	A term used in some contexts for the VACON® NX liquid Cooled AC drives so that they are more easily separated from the air-cooled VACON® NXP 0009 used in the HX-unit. The main drive concept might also include other liquid cooled electrical equipment.
HX control unit	The air-cooled NXP 0009 drive that is placed inside the HX-unit for the purpose of controlling and monitoring the primary circuit pump and instruments.

INDEX

1. SAFETY 8
1.1 USE OF SYMBOLS 8
1.2 GENERAL WARNINGS AND NOTES WHEN WORKING WITH THE HX-UNIT 9
2. EU DIRECTIVE 11
2.1 Manufacturer's declaration of conformity 11
3. RECEIPT OF DELIVERY 12
3.1 Type designation code 12
3.2 Standard delivery variants 12
3.3 Connections 12
4. INTRODUCTION 13
4.1 ABOUT THIS MANUAL 13
4.2 PROCESS AND INSTRUMENTATION 14
4.2.1 Primary circuit components and function 15
4.2.2 Secondary circuit components and function 15
4.2.3 Control unit 16
4.2.4 Instruments and their function 16
4.2.5 Control / supervision parameters 17
4.2.6 HX-unit electrical box 19
4.3 INSTALLATION SPECIFICATIONS 19
4.3.1 Liquid quality 19
4.3.2 Required ambient conditions 21
4.4 DISPOSAL 21
5. COMMISSIONING 22
5.1 STEP 1, MECHANICAL PART 22
5.1.1 Lifting, transport and storage of the HX-unit 22
5.1.2 General installation instructions 23
5.1.3 Pipe connections 23
5.1.4 Pipe flushing 24
5.1.5 Pressure test 24
5.1.6 Setting up the primary circuit 26
5.1.7 Adding liquid and de-airing 27
5.1.8 Adding corrosion inhibitor when using a fresh water system 28
5.2 STEP 2, ELECTRICAL PART 29
5.2.1 Power supply 29
5.2.2 Signal cables 29
5.3 STEP 3, CONTROL UNIT SETUP 30
5.3.1 Basic setup 30
5.3.2 Application parameter list 31
5.3.3 Parameter description 32
5.3.4 General information about alarms and shutoff limits 33
5.3.5 FTSA11 flow switch function 34
5.3.6 Temperature set points 36
5.3.7 Temperature alarm settings 41
5.3.8 Low pressure alarm 42
5.3.9 Leak switch alarm specifications 42

5.4 STEP 4, ADJUSTING THE FLOW 43
5.4.1 Starting the pump 43
5.4.2 Adjusting the system flow and setting the switch point of the FTSA11 44
5.4.3 Checklist before starting main NX drives 47
6. UNIT MAINTENANCE 49
6.1 GENERAL MAINTENANCE 49
6.1.1 Renewing liquid in the primary circuit 49
6.1.2 Maintenance schedule 49
6.2 MAINTENANCE BY COMPONENT 50
6.2.1 Pump 50
6.2.2 Heat exchanger 51
6.2.3 Pressure vessel 54
7. TROUBLESHOOTING 55
7.1 Alarms and shutoffs 55
7.1.1 Flow fault 55
7.1.2 Temperature alarms and shutoffs 56
7.1.3 Low pressure alarm 58
7.1.4 Leak alarms 59
8. TECHNICAL SPECIFICATION 60
APPENDIX 1 62
APPENDIX 2 63
APPENDIX 3 64
APPENDIX 4 65

1. SAFETY

This chapter contains the general safety instructions, which you must follow when installing, commissioning, operating and maintaining the HX-unit. Read the safety instructions before you start to work on the unit.

1.1 USE OF SYMBOLS

For your own safety, please pay special attention to the instructions marked with the following symbols:

	Risk of death. Instructions on preventing a possible severe hazard to persons or equipment.
	Risk of damage. Instructions on preventing possible damage to persons or equipment.
	Hot surface. Instructions on preventing a possible minor hazard to persons or equipment.
	Notification

1.2 GENERAL WARNINGS AND NOTES WHEN WORKING WITH THE HX-UNIT

These safety instructions are intended for all who work on the HX-unit. These instructions include only a part of the complete safety instructions. Read the VACON® NX Liquid Cooled User's Manual safety instructions as well. Ignoring the instructions can cause physical injury or death. It can also cause serious malfunctions to the HX-unit that is not covered by the warranty. When working on the HX-unit generally acknowledged safety standards, EU directives and national regulations must also be followed.

	1	Only qualified and authorized electricians and mechanics are allowed to carry out the installation and maintenance work on the HX-unit.
	2	Do not open the drive section doors while the drives are online. If you suspect a coolant leak in the drive section, shut down the drives and disconnect the power to them before opening the drive section cubicle doors.
	3	When working with the HX-unit together with the AC drive, also follow the VACON® NX Liquid Cooled Drive User's Manual safety instructions to prevent any accidents.
 WARNING	4	Any installation work on the HX-unit must be done with power off. The power must not be reconnected before the installation work is complete.
	5	The primary cooling circuit can contain hot coolant (over +50°C) during normal operation. Serious burns are possible. Before performing maintenance, switch off the unit and allow it to cool down.
 HOT SURFACE	6	The primary cooling circuit can contain high-pressure coolant (6 bar) during operation. Release the pressure in the HX-unit before performing maintenance. Use safety goggles.
	7	The HX-unit must be positioned in a non-hazardous area where it can't pose a threat to any main systems or persons.
	8	The coolant consists, depending on the project, of plain drinking water or of a mix of water, propylene glycol and corrosion inhibitors. Glycol and corrosion inhibitors are dangerous to health. If you get coolant mixed with glycol or corrosion inhibitors in your eyes, on your skin, or in your mouth, seek medical advice.
 NOTE	1	It is the customer's and/or end-user's responsibility to provide flow and temperature control to the secondary circuit. If the project specified flow and temperature for the secondary circuit is not met the warranty is not valid.
	2	Retain these operating instructions during the entire life cycle of the HX-unit.
	3	The HX-unit should always be transported empty (that is, without coolant) to prevent damage caused by low and high ambient temperatures.
	4	Do not allow any force or vibrations to enter the unit through the secondary circuit pipe connections or through the fixing points of the HX-unit. This will shorten the MTBF (mean time between failure) of the HX-unit.
	5	If the HX-unit is purchased without a cubicle, place it inside a cubicle of choice and fix the HX-unit frame to the cubicle frame. If the HX-unit is to be without a cubicle, it should be fixed to a floor or wall.

	6	Always install a filter before the HX-unit if the secondary circuit cooling liquid contains particles larger than 2 mm. If the secondary circuit liquid contains chemical or biological residue the MTTM (Mean time to Maintenance) is significantly reduced due to clogging in the plate heat exchanger inside the HX-unit.

NOTE! You can download the English and French product manuals with applicable safety, warning and caution information from http://drives.danfoss.com/knowledge-center/technical-documentation/.

REMARQUE Vous pouvez télécharger les versions anglaise et française des manuels produit contenant l'ensemble des informations de sécurité, avertissements et mises en garde applicables sur le site http://drives.danfoss.com/knowledge-center/technical-documentation/.

2. EU DIRECTIVE

2.1 Manufacturer's declaration of conformity

Below is the Manufacturer's Declarations of Conformity assuring the compliance of VACON® AC drives with the EMC-directives.

Danfoss A/S
DK-6430 Nordborg
Denmark
CVR nr.: 20 16 57 15

Telephone: +45 7488 2222
Fax: +45 7449 0949

EU DECLARATION OF CONFORMITY

Danfoss A/S
Vacon Ltd

declares under our sole responsibility that the

Product(s) Vacon HX Cooling unit

Type(s) HXL/M-M/R/V-040/120/300-N-P/S

Covered by this declaration is in conformity with the following directive(s), standard(s) or other normative document(s), provided that the product is used in accordance with our instructions.

Safety: EN 60204-1:2006+A1:2009
EN 809:1998+A1:2009
EN ISO 12100-1:2003+A1:2009
EN ISO 12100-2:2003+A1:2009

EMC: EN 61000-6-2:2005 (for industrial applications)
EN 61000-6-4:2007 (for industrial applications)

and conforms to the relevant safety provisions of Low Voltage Directive 2006/95/EC (until April 19th, 2016), 2014/35/EU (from April 20th, 2016), Machinery Directive 2006/42/EC , and EMC Directive 2004/108/EC (until April 19th, 2016), 2014/30/EU (from April 20th, 2016).

The person who compiles the technical file:
Matti Lehtimäki
Runsorintie 7
FI-65380 VAASA
FINLAND

The year the CE marking was affixed: 2014

Date	Issued by	Date	Approved by
15-04-2016	Signature Name: Kimmo Syväinen Title: Director, Premium Drives	15-04-2016	Signature Name: Timo Kasi Title: VP, Design Center Finland and Italy

Danfoss only vouches for the correctness of the English version of this declaration. In the event of the declaration being translated into any other language, the translator concerned shall be liable for the correctness of the translation

ID No: DPD01843 Revision No: A Page 1 of 1

3. RECEIPT OF DELIVERY

3.1 Type designation code

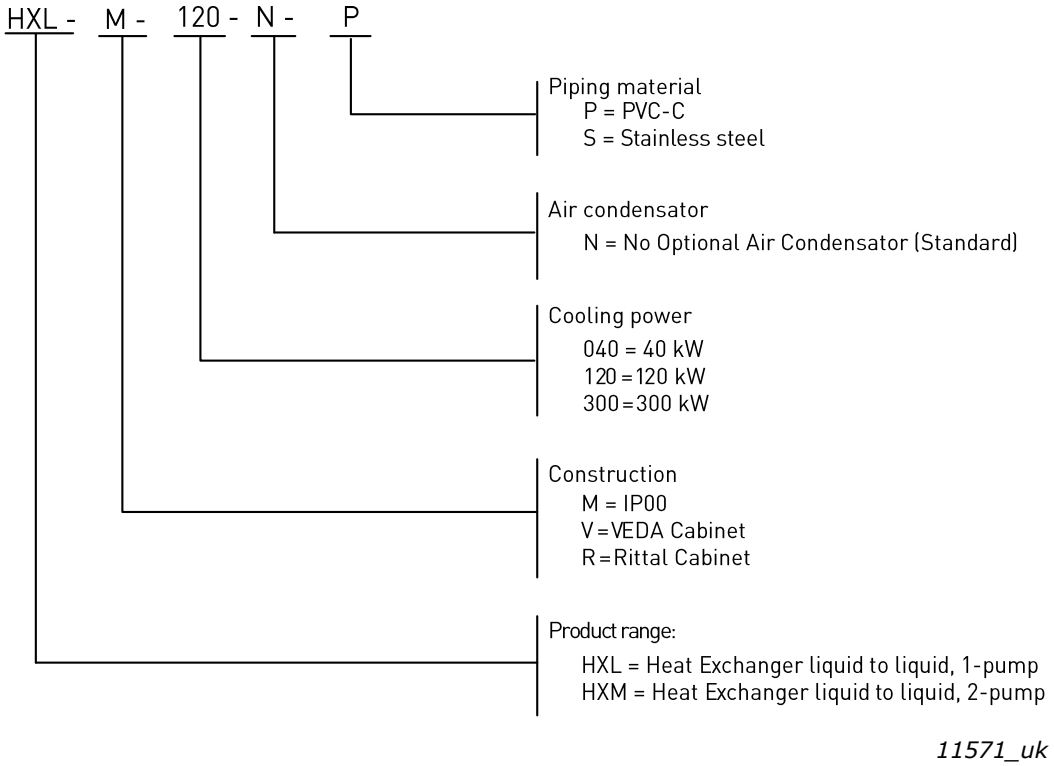

Figure 3.1-1 VACON® HX unit type designation code

3.2 Standard delivery variants

HXL-M/V/R-040-N-P/S
HXL-M/V/R-120-N-P/S
HXM-M/V/R-120-N-P/S
HXL-M/R-300-N-S
HXM-M/R-300-N-S

3.3 Connections

HX-Module; Threads or flanges, HXL300 and HXM300 flanges only
VEDA/Rittal; Flanges

4. INTRODUCTION

4.1 ABOUT THIS MANUAL

This manual provides information on commissioning and maintenance issues of the HXM120 cooling unit. The manual is intended to be used by manufacturer's own personnel as well as the customer and/or end-user.

To follow the instructions in this manual, the reader must have a reasonable knowledge of mechanics and electrics.

 WARNING	Only a qualified and authorized mechanic is allowed to perform commissioning or maintenance of the HX-unit. A qualified and authorized electrician should accompany the mechanic performing maintenance or commissioning on the unit.

This manual is divided into following chapters:

Chapter 1 SAFETY explains the symbols used in this manual and contains the general safety instructions. Read the safety instructions before continuing.

Chapter 2 EU DIRECTIVE includes the EC declaration related to the product.

Chapter 3 RECEIPT OF DELIVERY includes type designation code information.

Chapter 4 INTRODUCTION explains how the HX-unit is built by looking into the unit process and instrumentation. The idea is to give the reader a basic understanding of the process and control philosophy. This chapter also includes specifications on correct ambient conditions for the HX-unit.

Chapter 5 COMMISSIONING provides information on how to install and how to start-up the unit. The chapter explains, among other things, how the unit is to be filled with liquid and how the system is to be de-aired. The chapter also shows the user the correct valve positions for start-up and how to set up the HX control unit.

Chapter 6 UNIT SERVICE explains required maintenance and some repair instructions for the components inside the cooling unit. More unit maintenance instructions can be found in the component maintenance handbooks. They are found at the end of the HX-unit Commissioning and Maintenance folder that is supplied with the unit.

Chapter 7 TROUBLESHOOTING includes fault tracing to help the user identify and solve a problem when the HX control unit (air-cooled VACON® NXP 0009) has an active alarm or fault.

Chapter 8 TECHNICAL SPECIFICATION

4.2 PROCESS AND INSTRUMENTATION

The HX-unit's principle of operation is based on liquid-to-liquid transfer of heat. The primary circuit transports the heat load from the AC drive to the plate heat exchanger. The secondary circuit liquid flowing through the plate heat exchanger then collects the heat load and transports it to an external condenser. This external condenser (which does not appear on the diagram) is part of the customer and/or end-user's existing cooling system. Another way to dispose of the heat load is to use existing natural resources e.g. a lake or river. The use and choice of a system for disposing of the heat load is the customer's and/or end-user's responsibility.

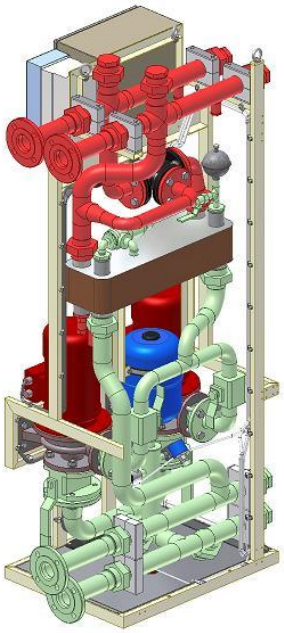

- Primary circuit, HXM120-PS01 (green colour in the Figure 4.2-1)
- Secondary circuit, HXM120-PS02 (red colour in the Figure 4.2-1)

The FTSA11 flow switch, which monitors the flow in the primary circuit, also includes a temperature sensor. This temperature sensor controls the primary circuit temperature. This sensor sends out an analogue signal to the HX control unit. The control unit application adjusts the secondary circuit flow through the plate heat exchanger (HX11) by adjusting the 3-way valve actuator (FV11) to match the temperature setup value for the primary circuit. This temperature setup value is project specific and is adjusted at commissioning. The temperature setup value is dependent on the ambient temperature in the drive cubicle and on the maximum temperature of the customer inlet liquid. The calculation of this value is explained in chapter 5.3.6, Temperature set points.

Figure 4.2-1

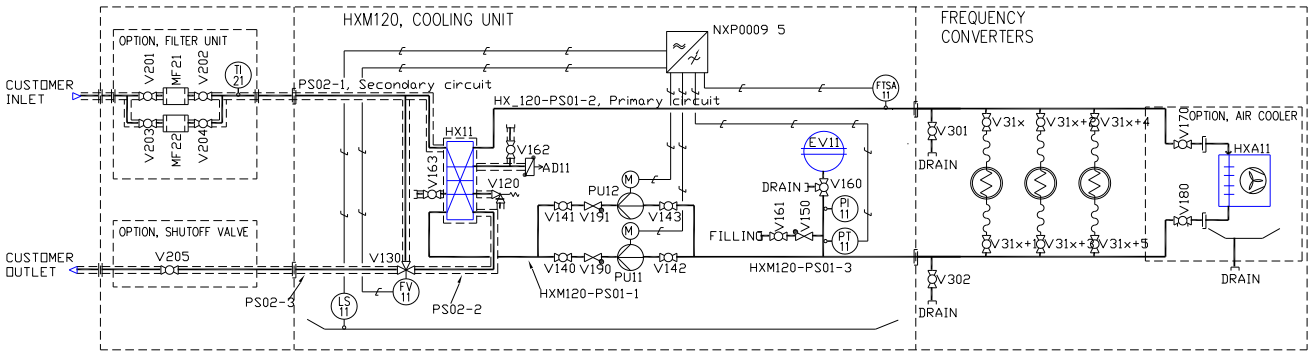

Figure 4.2-2 Piping and instrumentation diagram (P&ID)

A larger P&ID is found in the Commissioning and Maintenance folder that is supplied with the unit.

The HX-unit is equipped with flow, temperature, pressure and leak supervision. The HX control unit application monitors these quantities. The application generates alarms or shut-offs from the instrument's I/O (input/output) signals depending on the parameter settings. The HX control unit interface panel allows the user to access these settings. The settings are found as editable parameters in the HX control unit application. Apart from the leak sensor, LS11, which is placed on the HX-unit floor, all instruments are placed in the primary circuit. Therefore the temperature and flow monitoring in the secondary circuit is the responsibility of the customer and/or end-user.

4.2.1 Primary circuit components and function

The primary circuit is a closed circuit with an expansion vessel (EV11, blue part in Figure 4.2-3) that compensates for temperature changes. The primary circuit flow and temperature must match the requirements of the drives that they are connected to. These requirements can be calculated by following the instructions in the VACON® NX Liquid Cooled Drive User's Manual.

As mentioned earlier, the system includes a plate heat exchanger, HX11 (copper/grey colour in Figure 4.2-3). This unit separates the primary circuit from the secondary circuit so therefore it is actually a part of both the primary and the secondary circuits. On top of the HX11 is the automatic de-airing valve (AD11, violet part in Figure 4.2-3), which removes air from the primary circuit without letting the water out.

The centrifugal pumps (PU11/12, red parts in Figure 4.2-3) circulate the primary circuit liquid. The pumps are run in sequence, never at the same time. The pumps are as default setup making a sequence switch every 168 hours. The flow can be adjusted to match the need of the connected drives by changing the frequency of the pump motor. The main function of the pump is to deliver enough flow for an optimal liquid-to-liquid heat transfer of the VACON® NX Liquid Cooled series. Other significant parts are the safety valve (V120, orange) and the instruments; flow switch (FTSA11, light blue), pressure transmitter (PT11, brown) and the pressure gauge (PI11, yellow). The valves used for maintenance such as filling or de-airing are described in chapter 5.1.7, Adding liquid and de-airing.

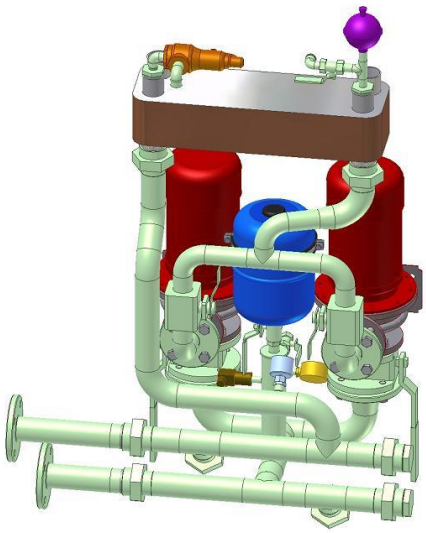

Figure 4.2-3

4.2.2 Secondary circuit components and function

The secondary circuit transports the heat load from the primary circuit to a customer-specific object. Through the plate heat exchanger, the heat load from the drives is transferred to the secondary circuit. The HX-unit does not have a control/supervision system for the secondary circuit therefore the customer should use a suitable option to control/supervise the secondary circuit's flow and temperature e.g. flow meter and temperature sensor.

A 3-way valve V130 (black part in Figure 4.2-4) placed in the secondary circuit controls the temperature of the primary circuit. The valve is regulated by an analogue temperature signal delivered by the flow switch FTSA11. The main function of the valve is to adjust the flow through the plate heat exchanger (HX11) in the secondary circuit, and thereby control the temperature in the primary circuit. By reducing the flow through the heat exchanger, the primary circuit's temperature increases, and vice versa.

The default valve regulation set point is +30°C. If the temperature drops below the set point, the 3-way valve starts to reduce the flow through the plate heat exchanger and directs more liquid through the bypass. Keeping the temperature as high as possible in the primary circuit, with regards to the type and load of the main drive, lowers the risk of condensation inside the drive cubicle.

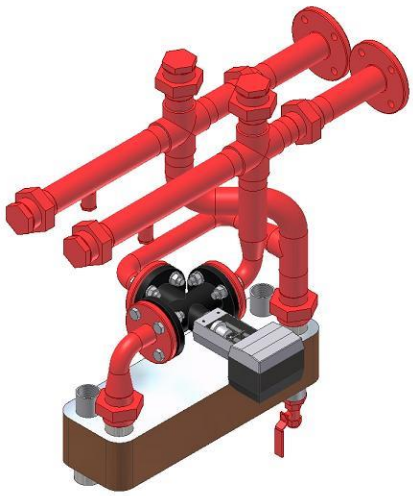

Figure 4.2-4

4.2.3 Control unit

The AC drive, VACON® NXP-series (Figure 4.2-5), works as a control/supervision unit for the primary circuit's temperature and flow, and adjusts the frequency of the cooling pump motor (PU11/12). The AC drive is programmed to read the I/O signals from the flow switch (FTSA11), pressure sensor (PT11) and leak switch (LS11).

Information on the alarms and how to calculate their limits is found in chapter 5.3 STEP 3, CONTROL UNIT SETUP. Information on how to modify the control unit parameters can be found in the VACON® NXP User's Manual that is supplied with the cooling unit.

The AC drive includes a Fieldbus link card. By connecting to this card, the customer can view eight different values (parameters), e.g. primary circuit temperatures, pressures, warnings and shutoffs. This is very useful if the HX-unit is not monitored locally. Information regarding the connection type is found in the VACON® NXP User's Manual that is supplied with the HX-unit.

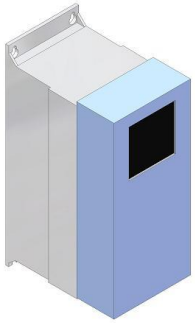

Figure 4.2-5

4.2.4 Instruments and their function

The flow switch FTSA11 (Figure 4.2-6) measures the speed of the flow inside the pipe. This flow speed is shown as 0-100% of the measuring range of the instrument. The FTSA11 has two different flow measuring ranges to choose from, 15-150 cm/s or 30-300 cm/s of which the higher range is used in the HX-units. The unit also sends the primary circuit temperature as a 4...20mA signal to the FV11 3-way valve actuator. Both the analogue temperature signal and the 'on/off' switch signal are sent to the HX control unit. The analogue signal is used to control the temperature in the primary circuit and also to generate temperature alarms and shutoffs. The PNP switch output that monitors the flow is used to generate a shutdown command.

The flow speed shown in % on the FTSA11 can easily be modified to flow (l/min) by using the diagram in chapter 5.4.2, Adjusting the system flow and setting the switch point of the FTSA11. Note that this diagram is correct only when using the FTSA11 high measuring range (30-300 cm/s) and the original pipe inner diameter.

This flow meter is suitable for concentration of maximum 25% glycol (75% water).



Figure 4.2-6

The other instruments found on the HX-unit are a pressure transmitter (PT11) and a pressure gauge (PI11). The pressure transmitter sends a 4...20mA signal to the HX control unit. The control unit application then converts this signal into pressure (bar). This pressure input is then used to monitoring the pump inlet pressure. The idea is to give the user an early warning in case there is a leak in the primary circuit somewhere outside of the HX-unit. The pressure gauge is used when filling the primary circuit with liquid or when performing a pressure test on the unit. It can also be used to get a pressure reference value if the pressure transmitter is thought to be malfunctioning.

4.2.5 Control / supervision parameters

When the HX-unit is working within the pre-set limits, it sends a 'cooling OK' signal to the main drives. The HX-unit supervision system is programmed to generate alarms to alert the user to a malfunction in the unit. If the malfunction is more severe, the control unit removes the 'cooling OK' signal to the main drive and takes them offline.
The project-specific minimum flow speed is to be set as switching point for the flow switch FTSA11. The flow switch sends a digital signal to the HX control unit, if the flow speed drops under the preset parameter values. If the signal is active longer than 5 seconds, the HX control unit disconnects the 'cooling OK' signal to the drives. This fault (fault number F87) also stops the HX-unit pumps.

The flow switch FTSA11 also sends out a temperature signal that controls the 3-way valve in the secondary circuit. The FTSA11 sends out a 4...20mA signal, which is then sent to the actuator (FV11) on valve V130.

The temperature parameters are adjusted at commissioning, depending on the maximum temperature of the inlet secondary circuit liquid and the ambient temperature in the main drive area. If the temperature drops below the set point in the primary circuit, the valve on the secondary circuit decreases the amount of liquid going through the plate heat exchanger (HX11) in order to increase the temperature in the primary circuit.

The temperature signal from FTSA11 also generates low- and high-temperature alarms and high-temperature shutoff. The high-temperature alarm and shutoff functions protect the main drives from overheating, and the low temperature alarm protects the main drives from condensation.

If the temperature goes above the high-temperature shutoff limit, the 'cooling OK' signal to the drive is disconnected. In this case, the HX-unit cooling pump continues running, but the main drive is shut down, that is, the 'cooling OK' signal to the drive is disconnected. The default setting for this parameter is 45°C.

The leak switch's sensor (LS11) is located on the leakage plate at the bottom of the HX-unit. The function of the switch is to give a signal to the HX control unit, in case there is liquid on the leakage plate. The liquid can be from a leak in one of the circuits, or from condensation on colder pipe surfaces due to high relative humidity of the air.

 NOTE	The HX-unit provides no control of the temperature or flow in the secondary circuit. It is strongly recommended that the customer and/or end-user add a temperature and flow control on the secondary circuit piping outside the HX-unit.

Depending on the quality of the secondary circuit liquid, the plate heat exchanger might clog and affect the efficiency and flow of the unit. Because the primary circuit is a closed circuit, it contains only a small amount of liquid. This means that it will react fast to changes in temperature or flow in the secondary piping.

 NOTE	If the flow for some reason is shut down in the secondary circuit, the HX-unit will disconnect the 'cooling OK' signal to the drive within seconds, depending on the main drive load, due to a high-temperature shutoff.

If there is no monitoring equipment in the secondary circuit, it is harder to determine the reason for a possible alarm from the HX-unit. Secondary circuit flow (or pressure difference) and temperature monitoring might in some cases help to prevent an unexpected shutdown of the drive.

4.2.6 HX-unit electrical box

The electrical box inside the HX-unit consists of a motor protection relay, circuit breakers, contactors, 400/24 V DC power supply and a terminal.

There are four switches attached to the electrical box door; main power switch, two pump power switches and leak sensor reset switch.

- Main power switch (red/yellow in Figure 4.2-7) is connected to the motor protection relay. Positions "0" (zero) and "1". The contact breaker controls the main power to the HX-unit, including the HX control unit.
- Pump power switch (black and red in Figure 4.2-7), positions "0" (zero) and "1". The contact breaker controls the power to the HX-unit pumps (PU11 and PU12). The pump can be started by turning the switch to position "1", and stopped by turning it back to position "0". If both switches are in position "1" then the pumps are automatically working in sequence, changing every 168 hours (or acc. to project specific value).
- LS11 leak sensor reset switch (white in Figure 4.2-7) resets the leak alarm. To reset the alarm, the liquid must first be removed from the sensor on the HX-unit leakage plate.

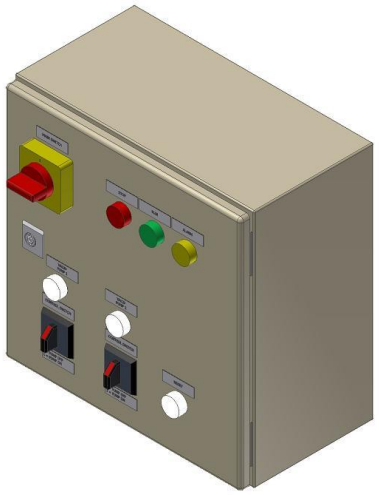

Figure 4.2-7

There are also five indication lights on the electrical box door. The colours indicate the following:

- Red indicates that the HX-unit is not working within correct parameter values. Either the temperature has reached the high-temperature shutoff limit or the flow is too low in the primary circuit. This light also indicates that the 'cooling OK' signal to the main drives is disconnected, therefore the main drives are offline.
- Yellow indicates that there is an active alarm in the HX-unit, meaning that the HX-unit is working outside the optimal temperature and/or pressure range or that there is a leak inside the unit.
- Green indicates that the 'cooling OK' signal to the main drives is connected.
- White indicators show which of the HX-pumps are activated during operation.

The troubleshooting guide is found in chapter 7 TROUBLESHOOTING. If the yellow or red indicator is active then you can find more information by accessing the HX control box interface panel. Information on how work the panel is found in the VACON® NXP User's Manual that is supplied with the unit.

4.3 INSTALLATION SPECIFICATIONS

4.3.1 Liquid quality

In the primary circuit, the quality of the liquid has to be as presented in Table 4.3-1, Liquid quality. The liquid should not contain organic sediment or chemically active qualities. The liquid can be treated with corrosion inhibitors suitable for AISI pipes, PTFE and Tesnit BA-S seals. When adding liquid to the primary circuit it is recommended that a filter be used so that no particles larger than 0.3 mm can enter the primary circuit.

The temperature of the liquid going to the main drives must never be lower than the ambient temperature in the cabinet at the point of a start-up of the main drives. If the system is shut down

during a cold period and the liquid runs a risk of freezing, a maximum of 20% of glycol can be added to the primary circuit system. If more glycol than 20% is needed to keep the liquid from freezing then contact your local distributor for additional information regarding a load reduction for the main drive.

To prevent corrosion, add the corrosion inhibitor Cortec VpCI-649 to the primary circuit liquid. Use the additive according to the product specification found in the Component Specifications and Maintenance Instructions section of the Commissioning and Maintenance folder.

Primary circuit liquid quality	Unit	Value
pH		6...9
Hardness of liquid	°dH	< 20
Conductivity	µS/cm	< 100
Chlorides (Cl) *	mg/l	< 100
Iron, Fe	mg/l	< 0.5
Maximum particle size	µm	< 300

Table 4.3-1, Liquid quality

*. The allowed concentration of chloride ions (Cl–): <1000 ppm at 20 °C, < 300 ppm at 50°C and < 100 ppm at 80 °C; the values are given as guidance to reduce the corrosion risk on stainless steel. The values are valid for pH=7. Lower pH value increases the risk.

The secondary circuit liquid quality is not expected to be as clean as the primary circuit liquid bearing in mind that clean liquid will prolong the time between cleaning the plate heat exchanger (HX11). If the customer and/or end-user are using a natural source of water for the secondary circuit, one can assume that the water will include some kind of organic sediment. This organic sediment will attach itself to the plates inside the HX11 and therefore the liquid-to-liquid heat transfer between the primary circuit and the secondary circuit will, over time, be less efficient. Another problem with this organic sediment is that the pressure loss over the HX11 will also increase and therefore the flow will decrease, which will also lead to poor liquid-to-liquid heat transfer between the primary and secondary circuit.

Because of possible organic sediment in the liquid circulation, it is strongly recommended that flow measuring equipment or a pressure difference measurement be installed on the secondary circuit. This equipment should generate an alarm if the flow is below requirements. When there is a need to clean the heat exchanger, refer to the Alfa Laval, AlfaCaus, Heat Exchanger Cleaning material found in the Component Specifications and Maintenance Instructions section of the Commissioning and Maintenance folder.

In the secondary circuit, the liquid should not contain particles larger than 2 mm. If there are larger particles in the liquid circulation, the 3-way valve or the heat exchanger might clog within a short period of time. Therefore it is strongly recommended that a filter (MF21) be installed at the secondary circuit inlet, which will filter out particles larger than 2 mm. For more information regarding this filter unit please contact our local distributor.

The secondary circuit liquid should not include any chemical residue that might be harmful for the material used in the HX-unit e.g. high amounts of chloride, chlorine, oil etc. The HX-unit with the PVC-C pipes uses EPDM rubber seals that will deteriorate if they come in contact with oil.

4.3.2 Required ambient conditions

The HX-unit is designed to work within ambient temperatures between +5...+50°C. It is the customer and/or end-user's responsibility to ensure that the temperature remains within this limit during operation. The HX-unit is not built to withstand rain, sand- or snowstorms. If the HX-unit is positioned outside it must be placed inside a cubicle that is equipped with temperature and humidity control.

There is no condensation allowed in the main drive. As the primary circuit piping is located inside the same cubicle as the main drive it is vital that the primary circuit water temperature doesn't go below the dew-point temperature. The primary circuit temperature is set accordingly to ambient temperature and relative humidity. The most secure way of preventing condensation inside the main drives is to keep the water temperature in the primary circuit higher than the ambient temperature.

If the temperature in the drive room is higher than the temperature of the liquid in the primary circuit piping it can, depending on the relative humidity of the air, cause condensation on the piping as well as inside the drive.

A dew-point chart can be used to optimize the primary circuit minimum temperature. It is recommended that the primary circuit temperature is higher than the ambient temperature but in some cases this will cause an unnecessary reduction of load in the main drive. If this is the case the maximum relative humidity (RH) at the installation must be specified. When the maximum RH and the maximum ambient temperature have been determined, the Dew-Point Chart found in chapter 5.3.6, Temperature set points can be used to define the minimum primary circuit temperature.

4.4 DISPOSAL

The HX-unit disposal must be done only at selective waste collection authorised centres, according to the local codes and standards.

Metal to metal waste
Electrical equipment to electrical waste
Glycol and corrosion inhibitors: Check national or local ecological directives for information on how to dispose of the drained liquid.

5. COMMISSIONING

5.1 STEP 1, MECHANICAL PART

WARNING	Only qualified and authorized mechanics are allowed to perform mechanical work on the HX-unit.

5.1.1 Lifting, transport and storage of the HX-unit

The HX-unit is provided with 4 lifting eyes (red colour in Figure 5.1-1). Also in cabinet is 4 lifting links (red colour in Figure 5.1-2). The HX-unit must be lifted always by using those 4 lifting eyes at the same time.

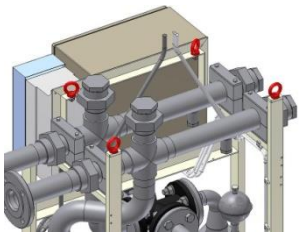

Figure 5.1-1

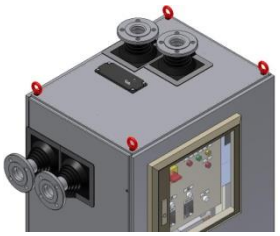

Figure 5.1-2

The HX-unit is packed in wooden box during transport.

The HX-unit must be protected against below freezing temperatures; the liquids must be taken away below 0°C. The HX-unit shall be stored in a dry and cool place protected from dust.

NOTE	The manufacturer of this HX-unit shall not be responsible for any possible damage to things and property and/or injuries to persons due to improper transport and/or handling of the HX-unit itself.

5.1.2 General installation instructions

The HX-unit is delivered with a self-supporting frame as shown in Figure 5.1-3. Therefore the customer can place the HX-unit in the cubicle of their choice. The unit is designed to fit inside a VEDA or Rittal 800x600x2000mm (W x D x H) cubicle. If the customer and/or end-user are using another kind of cubicle it is their responsibility to ensure that the HX-unit fits inside the cubicle of choice. The unit can be delivered pre-fitted to a VEDA or Rittal cubicle on request. For more information regarding this option contact your local distributor.

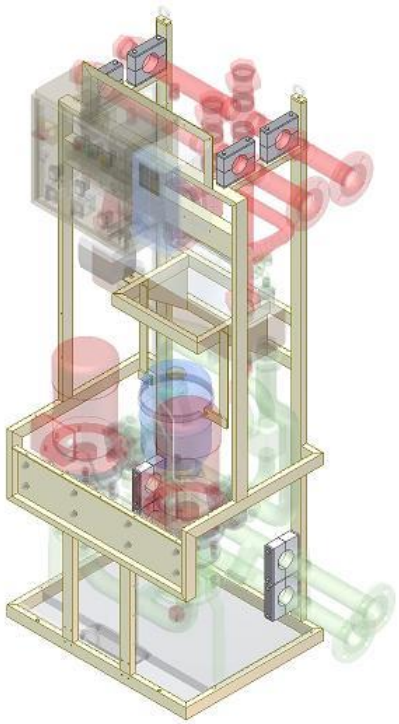

Figure 5.1-3

If the customer positions the HX-unit in their own cubicle, it is the customer's and/or end-user's responsibility to make sure that the unit is fixed according to requirements. The HX-unit should be fixed to the cubicle frame with suitable and robust supports to prevent the unit from moving or being damaged by vibrations.

The HX-unit can be fixed to a floor or a wall by itself. The frame that the unit is built on is self-supporting. If the unit is installed without an additional cubicle, e.g. VEDA or Rittal, it must be positioned in a non-hazardous area where it can't pose a threat to any main systems or persons. If required, e.g. by national regulations or generally acknowledged safety standards, additional protection must be added to the unit, e.g. warning signs or additional protective gear.

5.1.3 Pipe connections

Standard connections are DN50 flanges according to DIN2642. Flange adapters are delivered in a separate box. When placing the HX-unit inside a cubicle it might be necessary to remove also the 2" connector parts that are screwed on to the pipes on the primary and secondary connections. This is because the total width is about 716mm when the connectors are on, and the width (door opening) on e.g. Rittals' 800mm cubicle is 712mm.

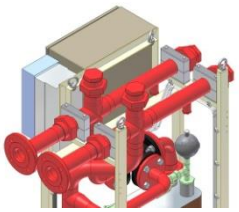

Figure 5.1-4

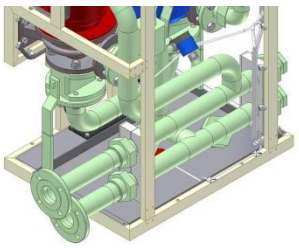

Figure 5.1-5



Figure 5.1-6



Figure 5.1-7

The material of the primary circuit and secondary circuit flanges is AISI 316. It is also possible to get PN16 flanges according to DIN 2633 (AISI 304) to secondary circuit.

The wall penetration is made according to IP54 requirements.

If the HX-unit isn't placed in the same line-up as the drives, therefore creating piping between the HX-unit and the main drives, the pressure loss of the piping between the HX-unit and the drive must not exceed 0.7 bar. If the calculated pressure loss is higher than 0.7 bar then the HX-unit will not be

able to produce the maximum flow of 360 l/min that is specified for the HXM120. If the 360 l/min is required for the installed main drives (e.g. one VACON® 3xCh74) but the HX-unit has to be placed at a point were the calculated pressure loss, for the added piping, is more than 0.7 bar it is recommended that two units is used instead.

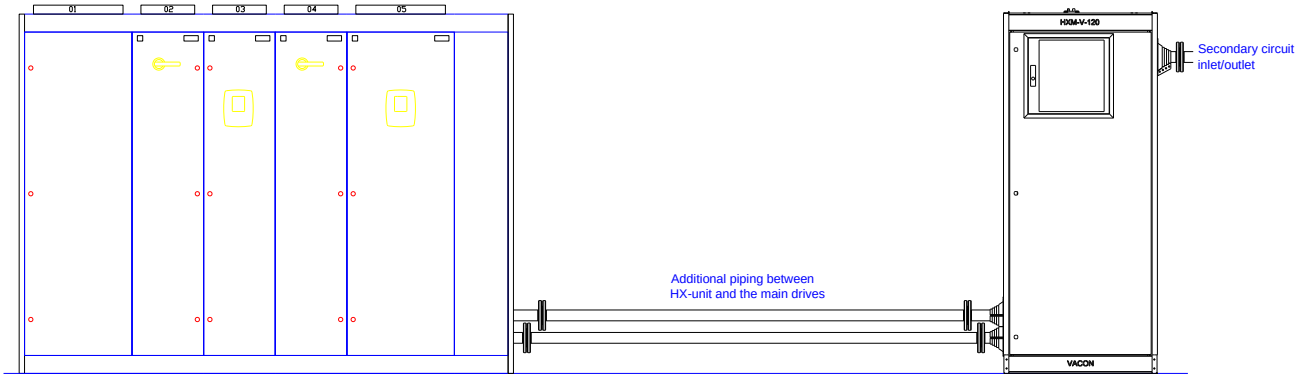

Figure 5.1-8

If the HX-unit is delivered as a part of NX Liquid Cooled switchgear, therefore being in the same line-up, then the connections between the HX-unit and the drive are ready and the customer only needs to connect the secondary circuit piping.

5.1.4 Pipe flushing

All piping in the primary or secondary system made by the customer and/or end-user must be flushed before being connected to the HX-unit. If the pipes have been welded with a TIG it is sufficient to clean the pipes by blowing pressurized air through them. If the welding has been done by other means the pipes have to be thoroughly flushed with water at a minimum of 3 m/s for 5 minutes.

5.1.5 Pressure test

A pressure test has already been performed on the HX-unit before delivery but because some of the connections are made on site, additional pressure testing is required. The pressure test performed on site should be done according to EU-directives or national regulations, whichever has priority on site.

NOTE	The safety valve V120 (marked orange in Figure 4.2-3) in the primary circuit is set to 6 bar and has to be removed during the pressure test. The V120 valve connection must be plugged during this pressure test. During the pressure test the de-airing valve AD11 (Figure 5.1-9) has to be closed. The threaded top plug must be replaced with tight plug or add an extra seal under the top plug. After the test change back the originally plug, tighten to end and then open 360 degrees.

To ensure that every site connection is sufficiently tightened, it is recommended that a pressure test be performed for the primary circuit using pressurized air. The pressurized air can be added through the liquid filling point of the unit, e.g. at valve V161 in the primary circuit.



Figure 5.1-9

WARNING	When performing a pressure test on the HX-unit, generally acknowledged safety standards, EU directives and national regulations must also be followed. **Use safety goggles.**

Unless national regulations say otherwise the pressure during the pressure test should be 1.5 times the maximum work pressure.

The maximum pressures are as follows:
Primary circuit AISI 304 piping = 6 bar, therefore the test pressure is 9 bar
Secondary circuit AISI 304 piping = 10 bar, therefore the maximum test pressure is 15 bar
Option: Secondary circuit AISI 304 piping = 16 bar, therefore the maximum test pressure is 24 bar
Primary circuit PVC-C piping = 6 bar, therefore the test pressure is 9 bar
Secondary circuit PVC-C piping = 10 bar, therefore the maximum test pressure is 15 bar

If the customer only uses a PN6 piping system on the secondary circuit, the pressure test can be done with pressurized air to 9 bar.

WARNING	If the secondary circuit is pressure tested higher than 10 bar the test must be done with water. Compressed air should not be used at pressures over 10 bar due to the risk of high-speed debris at a compressed pipe failure.

WARNING	The pressures mentioned here are only valid for the HX-unit. The customer and/or end-user are responsible for all other piping made to either the primary or secondary circuit. If the customer and/or end-user make any changes to the piping on the HX-unit they are responsible for them.

The pressure in the primary circuit can be monitored from the pressure indicator PI11 during the pressure test. If the pressure remains constant for 15 minutes, the system is airtight. If the pressure is decreasing, look for the leak by soaking the pipe connections with soap-liquid. When the leak is located tighten the connection and redo the pressure test.

If the pressure test is done with water the leaks can be located visually, therefore no soap-water is necessary.

5.1.6 Setting up the primary circuit

Before filling the system with liquid, check that all pipes and hoses are connected. The maintenance valves V160...V162 are plugged so that no accidents can occur during operation. During maintenance these plugs must be replaced with hose nipples or similar parts so that a hose can be connected to the valve.

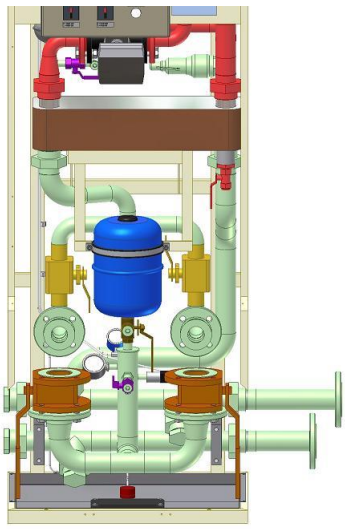

Figure 5.1-10

The valve handle positions before pre-filling the system are as following:

- Valves V161...V162 open (violet colour in Figure 5.1-10)
- Valve V160 lever down (brown colour in Figure 5.1-10)
- Valves V140...V141 closed (yellow colour in Figure 5.1-10)
- Valves V142...V143 open (orange colour in Figure 5.1-10)
- Valves V301...V302 closed (see P&ID, Figure 4.2-2)
- Valves V310...V31x open (see P&ID, Figure 4.2-2)

A hose must be connected to the manual de-airing valve, V162 that is positioned on top of the HX11 plate heat exchanger. The other end of this hose should be pointed into a drain or into a tank depending on which system is used for the filling procedure. The system used for filling should be able to produce at least 2 bar and delivery at least 15 l/min.

There are many ways of adding water to a piping system like the primary circuit. The two most common ways of filling are presented next. Which of these are used depend on if the site has a fresh water system or if the water has to be filled from a tank.

Figure 5.1-11 shows how to connect the hoses to the HX-unit if there is no pressurized fresh-water system at hand.

- Connect a suction pump outlet to the filling valve V161. Secure the connections with a hose clamp.
- Connect the drain hose to the manual de-airing valve V162 and put the other end of the hose in the barrel. Secure the connection with a hose clamp.
- Secure the drain hose to the barrel so it won't jump out during the filling and de-airing.
- If corrosion inhibitors are used they can be mixed, in the right amount, with the water in the barrel.
- Depending on the system size there has to be 20-200 litres of liquid in the barrel.

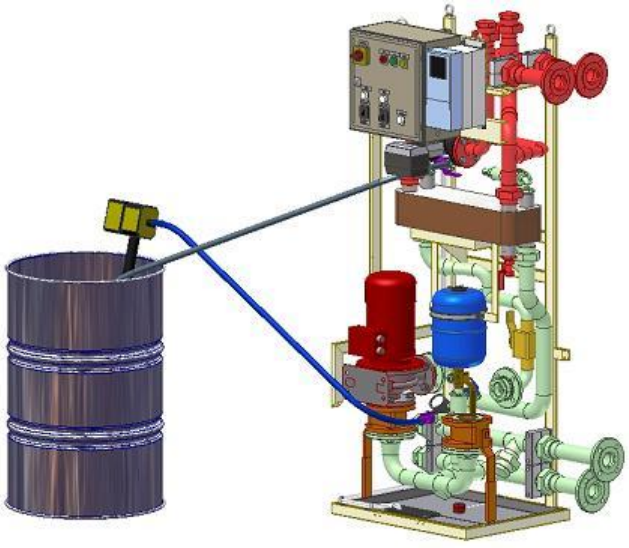

Figure 5.1-11

Figure 5.1-12 shows how to connect the hoses to the HX-unit if there is a pressurized fresh-water system at hand.

- Connect the hose from the faucet to the filling valve V161. Secure the connections with a hose clamp.
- Connect the drain hose to the manual de-airing valve V162 and put the other end of the hose into a drain. Secure the connection with a hose clamp.
- Secure the drain hose to the drain so it won't jump out during the filling and de-airing.
- For adding corrosion inhibitor read chapter 5.1.8.

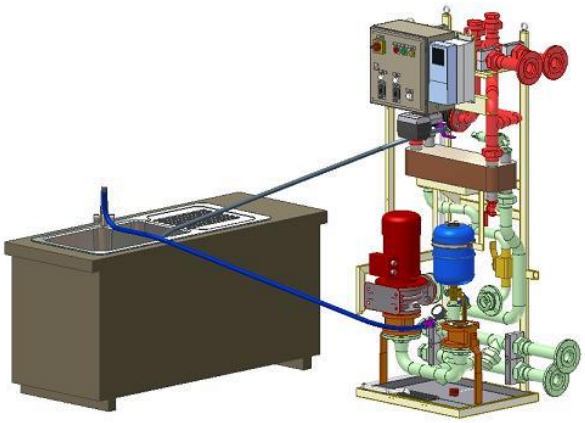

Figure 5.1-12

If a local sink or floor-drain is used and corrosion inhibitors are added to the liquid in the primary circuit then it is the customer and/or end-user's responsibility to check that the coolant mix can be disposed of through the local sewer system.

5.1.7 Adding liquid and de-airing

Follow the instructions for the pre-filling process before starting the pump at commissioning or after maintenance.

How to fill the primary circuit HXM120-PS01 (See P&ID in Figure 4.2-2):

1. Prepare the unit according to the recommendations in chapter 5.1.6 Setting up the primary circuit. Use valve V161 to regulate the flow during the filling and de-airing of the unit.
2. It is recommended that the flow, from the external pump or water supply system, is low in the beginning of the filling process. This ensures that a minimum amount of air pockets is left in the piping.
3. Close valve V161. Open the faucet or start the external pump depending on which filling system you are using. Slowly open valve V161 to a 30-50% of maximum.
4. After a short while liquid starts to come out of the drain-hose (connected to the valve V162). During the first minutes you will hear a rattling sound in the pipes. This is the air transported out of the system by the water. After the rattling sound stops you should open the filling valve V161 to 100%.
5. Keep the water flowing until you can't hear any more rattles, and then close the V161 valve. Also close all the main drive valves, V310...V3xx, both the inlet and the outlet valves.

Now it is time to de-air the drives. De-air the main drives one hose pair at a time, for example V310 and V311 (See Figure 4.2-2):

6. Open valve V310 first then valve V311, this means that this path will be the only way for the water to pass when you continue filling. Then open the filling valve V161. The water will again come out from the hose connected to the manual de-airing valve V162. Keep the water running until the rattling sound disappears, that is to say the air has been removed after which the V161 filling valve is closed again.
7. Close the valve V310 first, and then the valve V311. This procedure will leave the specific drive section filled with water.

WARNING	If the external water system used for the filling can produce more than 6 bars there is a risk of the safety valve (V120) opening. This might cause unnecessary problems if some particles are left on the sealing surface of the safety valve and therefore causing a leak. If this happens the safety valve must be cleaned.

8. Repeat this procedure until every AC drive/inverter is de-aired, that is, open the valve V312 and V313 next and so on.
9. After all the main drive hoses have been de-aired and closed, open valve V140...V141 and then open the filling valve V161. After no more rattling can be heard due to air in the system, close valve V162, the manual de-airing valve.
10. When valve V162 is closed the pressure (see at the PI11, pressure indicator) will start to rise in the primary system. When the pressure in the primary system has raised to two (2) bar close the V161 filling-valve. If you are using an external pump for adding the water it can now be turned off.
11. Keep the two (2) bar pressure for about 10 minutes, letting the air bubbles in the system rise up to the HX11 heat exchanger. Then open the manual de-airing valve V162 to let the pressure back down to 1.5 bar. Close valve V162.
12. Now the system is almost completely de-aired. After this the pumps must be run for short periods to get the rest of the air out from the HX-unit. Refer to chapter 5.4.1 Starting the pump for the rest of the de-airing instructions.

The pre-pressure in the primary circuit should be set to 1.5 bar. During operation the pre-pressure should be between 1.0 to 1.5 bar. If the pre-pressure is reduced to below 1.0 bar during operation liquid must be added. The HX control unit will generate a 'Low-pressure' alarm if the pre-pressure is below 0.5 bar.

5.1.8 Adding corrosion inhibitor when using a fresh water system

If you are using a fresh water system to add water it is more difficult to add the corrosion inhibitor. The corrosion inhibitor can be added through the manual de-airing valve V162. To do this the water level has to be lowered in the HX11 and a funnel has to be used (Figure 5.1-13).

1. The corrosion inhibitor should be added after all the main drives have been de-aired. Check that all the main drive valves, V310...V3xx, are closed.
2. Lower the liquid level in the plate heat exchanger HX11 by opening the valve V301 and letting out 2 litres of water. This will lower the level inside the HX11 and make the necessary space for the corrosion inhibitor.
3. Remove the hose from the valve V162 and replace it with a one (1) meter long hose. Connect a funnel to the loose end of the hose.
4. Keep the funnel higher up than the heat exchanger HX11, and pour the corrosion inhibitor into the HX11 using a jug. Refer to the Cortec VpCI-649 product description for calculating the right amount of corrosion inhibitor (refer to the technical specifications for Cortec found in the Commissioning and Maintenance folder).
5. After all the corrosion inhibitor is added use the same jug to fill the HX11 all the way up with water. When no more water will go into the HX11 then close the manual de-airing valve V162 and remove the hose.

6. Now open the filling valve V161 and increase the pressure back to 1.5 bar. The corrosion inhibitor will get mixed when the pump is rotated for a while.

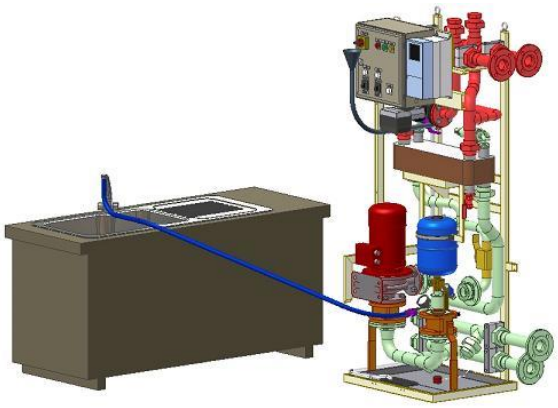

Figure 5.1-13

5.2 STEP 2, ELECTRICAL PART

WARNING	Only qualified and authorized electricians are allowed to perform electrical work on the HX-unit.

5.2.1 Power supply

The HX-unit uses 3 ~, 400VAC (50Hz) or 3 ~, 440VAC (60Hz), 16 A power supply. The supply cable has to be dimensioned according to these values and use cable with heat resistance of at least +70°C. There are two alternatives to bring the supply cables to HX-unit: from under or from above (Figure 5.2-1, Figure 5.2-2).

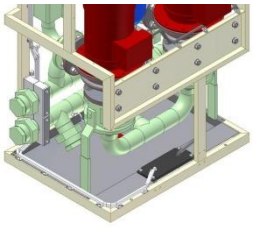

Figure 5.2-1

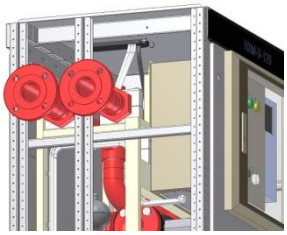

Figure 5.2-2

Connect the power supply to the motor protection relay (marked green in Figure 5.2-3) in the HX-unit electrical box.



Figure 5.2-3

5.2.2 Signal cables

A signal cable must be connected between the main drive and the HX-unit electrical box. It should be connected from the main drive basic I/O board NXOPTA1, terminal number 6 or 12 (24V out) to the HX-unit X1 terminal block (marked green in Figure 5.2-4) terminal number 16 (cooling OK in), and back from X1, terminal number 17 (cooling OK out) to the main drive, terminal number 14 (DI 4). For more information refer to the project specific electrical diagram and to the VACON® NX Liquid Cooled drive User's Manual that is supplied with the main drives.



Figure 5.2-4

A 24V auxiliary voltage from the main drive is sent through the cable to the HX-unit. If the HX-unit is working within the preset parameters then the signal is rerouted back to the main drive. When the signal is active in the main drive basic I/O board NXOPTA1 (terminal number 14), then the main drive application will activate a 'Cooling OK' function that will allow starting and operating the main drive (="Run Enable").

When a flow fault or high temperature fault is active in the HX-unit, the digital output ("cooling OK") contact in the HX control unit will disconnect the 24V signal and the main drives will shut down. The main drive cannot be brought online before the flow fault or high temperature fault is removed.

5.3 STEP 3, CONTROL UNIT SETUP

5.3.1 Basic setup

The control unit application includes 'Flow control' parameters that have to be modified for every project. Primary circuit inlet temperature and primary circuit flow are two equally important quantities that have to be monitored at all times. How to calculate the optimum flow is found in chapter 5.4.2, Adjusting the system flow and setting the switch point of the FTSA11. How to correctly set up temperature alarms and shutoffs is found in chapter 5.3.6, Temperature set points.

 WARNING	If the customer and/or end-user cause a malfunction in the HX-unit or the main drive by neglecting the parameter setup instructions in this manual, the warranty is no longer valid.

To modify the 'Flow control' parameters one has to be able to use the NXP control panel. Information on how to operate the NXP control panel is found in the VACON® NX Liquid Cooled User's Manual that is supplied with the HX-unit.

The control unit also includes a Fieldbus uplink card (Profibus). The customer can use this uplink to get any of the VACON® NXP parameter values linked to a 'higher' control system. By using this uplink the customer can monitor the HX-unit from an external interface at a chosen location. More information regarding this uplink interface is found in the VACON® NX Liquid Cooled User's Manual that is supplied with the HX-unit.

5.3.2 Application parameter list

The application parameters and their default values are shown in table 5.3-1. The project specific parameters are calculated using the rules found in chapters 5.3.6 to 5.3.7. The values that are used when setting up the HX-unit during commissioning should be written down in the 'Custom, settings' column. If the values must be changed at a later time the new value should be written in the last column (Changes, customer). The parameters that must be edited at commissioning are marked with a *) in the table 5.3-1. More information about these parameters is found in chapter 5.3.3, Parameter description.

Parameter code	Parameter description	Default setting	Custom, settings	Changes (Customer)
P2.10.1 *)	Frequency to PU11 when PID enabled	50Hz		
P2.10.2	PT11 pressure transmitter low pressure setting, scaling	0 bar		
P2.10.3	PT11 pressure transmitter high pressure setting, scaling	10 bar		
P2.10.4	PT11 pressure error, low pressure alarm	0.5 bar		
P2.10.5	Inlet pressure supervision	1		
P2.10.6	FTSA11 temperature transmitter low temperature setting, scaling	0 °C		
P2.10.7	FTSA11 temperature transmitter high temperature setting, scaling	100 °C		
P2.10.8 *)	FTSA11 temperature error, low temperature alarm	22 °C		
P2.10.9 *)	FTSA11 temperature error, high temperature alarm	28 °C		
P2.10.10 *)	FTSA11 temperature error, high temperature shutoff	35 °C		
P2.10.11	Pump automatic changing sequence time	169 h		
P2.10.12	Fault delay setting	5 s		
P2.11.1	Fieldbus outlet 1	1501		
P2.11.2	Fieldbus outlet 2	2		
P2.11.3	Fieldbus outlet 3	45		
P2.11.4	Fieldbus outlet 4	1511		
P2.11.5	Fieldbus outlet 5	1		
P2.11.6	Fieldbus outlet 6	4		
P2.11.7	Fieldbus outlet 7	5		
P2.11.8	Fieldbus outlet 7	37		
P3.5 *)	FV11 reference temperature	25		

Table 5.3-1, Parameter list

5.3.3 Parameter description

The table 5.3-1 includes parameters made to monitor and control the HX-unit. This chapter includes short explanations on what the different parameters are used for.

P2.10.1 is the actual frequency that the pump motor will run at when producing the required flow in the system. The speed of the pump frequency should be optimized according to the required flow (see Chapter 5.4.2, Adjusting the system flow and setting the switch point of the FTSA11). This will reduce the wear of the cooling system and therefore extend the MTBF (mean time before failure) of the HXM unit and the main drives.

P2.10.2 is the min. value of the range of the pressure transmitter PT11. It is used to scale the pressure transmitter (PT11) low pressure point. The PT11 has a min measure point at 0 bar.

P2.10.3 is the max. value of the range of the pressure transmitter PT11. It is used to scale the pressure transmitter (PT11) high pressure point. The PT11 has a max measure point at 10 bar.

P2.10.4 is a PT11 low temperature, alarm limit. The default setting for this is set at 0.5 bar. More information can be found in chapter 5.3.8, Low-pressure alarm.

P2.10.5 is a selection parameter that should be set to 1. If the PT11 pressure transmitter malfunctions the parameter can be set to 0 therefore overriding the pump suction side pressure supervision. The pressure transmitter MUST BE REPLACED as soon as possible, the warranty is not valid if this parameter is set to "0".

P2.10.6 is the min. value of the range of the temperature transmitter FTSA11. It is used to scale the temperature transmitter (FTSA11) low-temperature point. The FTSA11 has a min measure point at 0°C.

P2.10.7 is the max. value of the range of the temperature transmitter FTSA11. It is used to scale the temperature transmitter (FTSA11) high-temperature point. The FTSA11 has a max measure point at 100°C.

P2.10.8 is a FTSA11 low-temperature, alarm limit. The default setting for this is set at 22°C. More information can be found in chapter 5.3.7, Temperature alarm settings.

P2.10.9 is a FTSA11 high-temperature, alarm limit. The default setting for this is set at 28°C. More information can be found in chapter 5.3.7, Temperature alarm settings.

P2.10.10 is a FTSA11 high-temperature, trip limit. The default setting for this is set at 35°C. This means that the drive will shut down ('cooling OK' signal going to the main drives will be disconnected) when the temperature is over 35°C. The HXM unit will stay online (pump running). More information can be found in chapter 5.3.7, Temperature alarm settings.

P2.10.11 the default setting is 169 'hours'. If the setting is between 1-168 (hour) the system will try to change the pumps according to the time setting. This is to be used **ONLY** when operating the HX-series model HXM120 (double pumps). If this value is set to 0h, the pump change will occur every 30 seconds. This is useful for testing and commissioning purposes because all shutoffs are also deactivated during these 30 seconds. The value, 169, will deactivate the attempt to change the pump and should be used when operating the HXL040 or HXL120.

P2.10.12 is the parameter that sets the delay time between when the parameters are exceeded and the activation of a warning/shutdown. The value can be varied from 1 to 5 seconds. The default setting is 5 seconds. During commissioning and maintenance the value is to be set to 5 seconds.

P2.11.1-8 are parameters for the Fieldbus (Profibus) output. The customer and/or end-user can choose any 8 of the NXP 0009 parameters to be sent out to a higher control system for external monitoring. The default values are as follows:

- P2.11.1, Primary side temperature from FTSA11 (°C)
- P2.11.2, HX pump motor speed (rpm)
- P2.11.3, HX pump motor current (A)
- P2.11.4, Primary side pump inlet pressure (bar)
- P2.11.5, Output frequency to HX pump motor (Hz)
- P2.11.6, Motor torque as % (+1000 equals +100%)
- P2.11.7, Motor shaft power in % (1000 equals 100%)
- P2.11.8, Fault (trip) history

P3.5 is the FV11 actuator reference temperature. Default value is 25 °C. This value is the liquid inlet temperature value to the main drives. More information can be found in chapter 5.3.6 Temperature set points.

NOTE	Only an authorized person is allowed to make changes to the parameter settings. If the drive or HXM unit is malfunctioning or if they break due to a customer and/or end-user parameter setup error the warranty is not valid.

5.3.4 General information about alarms and shutoff limits

Apart from the standard NXP AC drive alarms, found in the VACON® NXP User's Manual, the HX-unit application can generate alarms or shut-offs from one flow switch (FTSA11) with a built in analogue temperature transmitter, a pressure sensor (PT11) and one leak sensor (LS11). All alarm and shutoff limits have a default value. These default values should, if needed, be modified at the commissioning phase.

NOTE	Refer to the VACON® NX USER'S MANUAL to change the parameters. Only authorized personnel are allowed to make modifications to the parameters.

The parameters and their settings can be found in chapter 5.3.2, Application parameter list. When you change the default settings during commissioning, you should write down the new setting including the date and your name to keep track of changes. Write down the new parameters to the custom setting column of the flow control parameter table 5.3-1.

5.3.5 *FTSA11 flow switch function*

The flow switch is set to shut down the HX-unit if the flow does not meet the requirements, refer to chapter 5.4.2, Adjusting the system flow and setting the switch point of the FTSA11. The unit settings should be modified, during commissioning, through the switch interface panel. The default setting for the switch is 50% (050).

Adjusting the FTSA11 flow switch:

1. Turn the pump power switch (the black and red switch in Figure 4.2-7) to the position "1" to connect the power to the HX-unit. This will activate the FTSA11.
2. When the power is connected, the display flashes for approximately 30 seconds with "888" for initialization. When the flashing stops, the device is ready for programming.



To change the parameters of the Uniflow flow sensor (Figure 5.3-1), the device has to be in setting mode. More information regarding the FTSA11 (Uniflow) flow switch can be found in the Component Specifications and Maintenance Instructions at the end of the Commissioning and Maintenance folder that is supplied with the HX-unit. Figure 5.3-2 shows the hierarchy of the parameters found in the FTSA11 flow switch. An example on how to edit the flow switch point is found in table 5.3-2.

Figure 5.3-1

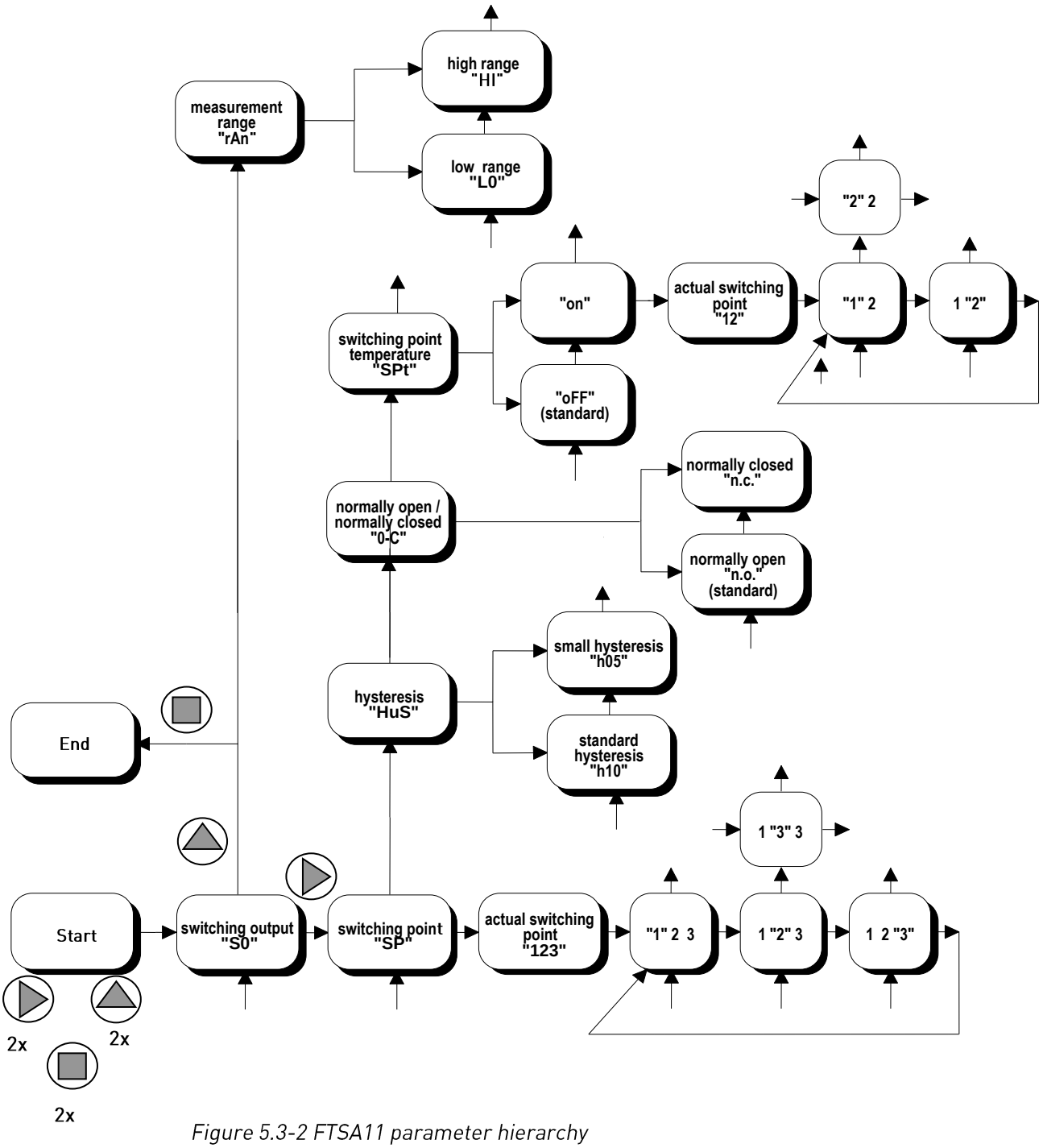

Figure 5.3-2 FTSA11 parameter hierarchy

Table 5.3-2 shows an example on how to set the flow switching point to 68.

Description	Push buttons	Display
1. Change to setting mode	2 x ▷, 2 x △, 2 x ■	"SO" (switching output)
2.	1 x ▷	"SP" (switching point)
3.	1 x ▷	"050" (actual switching point)
4. Display hundred digit	1 x ▷	"**0**50" (hundred digit is flashing)
5. Display ten digit	1 x ▷	"0**5**0" (ten digit is flashing)
6. Increase ten digit	1 x △	"0**6**0" (ten digit is flashing)
7. Display one digit	1 x ▷	"06**0**" (one digit is flashing)
8. Increase one digit	8 x ■	"06**8**" (one digit is flashing)
9. Save new switching point	4 x ■	"068", "SP", "SO", "123" (actual flow)

Table 5.3-2 Setting flow switching point

The settings on the FTSA11 should be the following:

- Measuring range, HI, high range 30 to 300 cm/s.
- Hysteresis, h05, 5% hysteresis.
- Switching order, n.c, normally closed.
- Temperature switch, OFF, no temperature switch point used.
- Flow switch point, according to calculations in chapter 5.4.2, Adjusting the system flow and setting the switch point of the FTSA11.

5.3.6 Temperature set points

If the primary circuit temperature isn't set correctly the main drive might malfunction because of condensation. The default setting of the parameter P3.5 in the HX control unit application is 25°C. This means that the 3-way valve adjusts the flow in the secondary circuit to keep the primary circuit liquid temperature at 25°C (measured by the FTSA11 before the drives).

There are three factors that will affect the nominal temperature of the primary circuit:

- Ambient maximum temperature at the main drive installation
- Ambient maximum relative humidity at the main drive installation
- Secondary circuit maximum temperature

All of these factors have to be taken into consideration when calculating the primary circuit temperature set point.

- If the humidity is high, condensation will occur in the piping inside the main drives and therefore cause a malfunction.
- If the ambient temperature is too high the load of the drive must be reduced.
- And if the customer and/or end-user have an existing cooling system, which is going to be connected to the secondary circuit, the temperature of this circuit might be the deciding factor.

The primary circuit temperature is individual for every project. Here are three examples that show how the primary circuit temperature is calculated depending on which of the three above-mentioned factors is the deciding one:

Example 1, high ambient temperature

If the customer and/or end-user have a high ambient temperature, 35°C, at the main drive that would require the primary circuit temperature to be equal or higher than 35°C. This would normally require a load reduction of the main drive. If the maximum relative humidity at the main drive is known, the dew-point chart (Chart 5.3-1) can be used to determine a more optimized temperature for the primary circuit.

Ambient temperature = 35°C
Maximum relative humidity = 60%
Acc. to chart 5.3-1→Dew point is @ 26°C

It is recommended to use a 2°C safety margin. Therefore the primary circuit temperature should in this case be set to 28°C (26°C +2°C). In this case no reduction of load in the main drive is needed, even if the ambient temperature is high, due to a rather low maximum relative humidity.

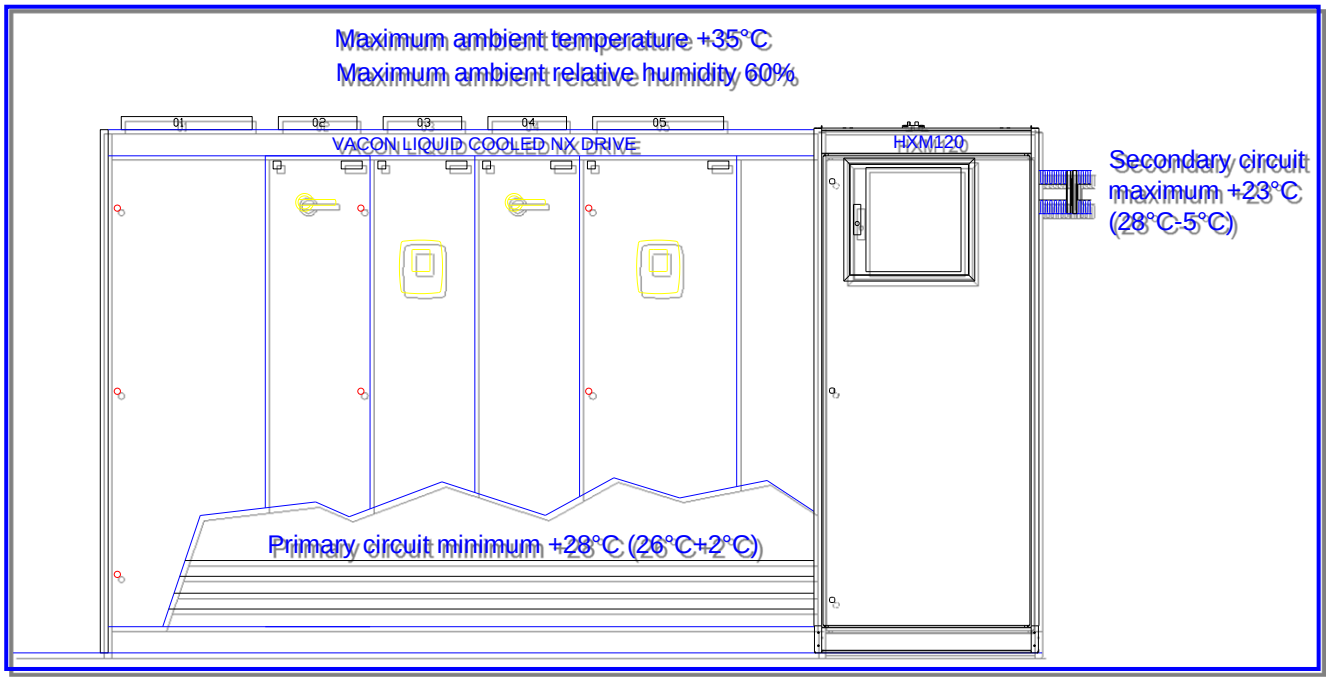

Figure 5.3-3 Example 1

The secondary circuit maximum temperature should always be 5°C lower than the primary circuit temperature to ensure a good thermal load transfer between the two circuits. In example 1 this means that the secondary circuit should be between +5...+23°C during operation. The 3-way valve in the secondary circuit will then keep the primary circuit temperature at 28°C regardless of the main drive load.

Example 2, high ambient relative humidity

If the customer and/or end-user have a high ambient temperature, 40°C, at the main drives that would require the primary circuit temperature to be equal or higher than 40°C. This would normally require a significant load reduction of the main drive. If the maximum relative humidity at the main drive is known, the dew-point chart can be used to determine a more optimized temperature for the primary circuit.

Ambient temperature = 40°C
Maximum relative humidity = 80%
Acc. to chart 3.3-1→Dew point is @ 36°C

It is recommended to use a 2°C safety margin. Therefore the primary circuit temperature should in this case be set to 38°C (36°C +2°C). Using a 38°C temperature, instead of 40°C, on the primary circuit will reduce the required load reduction of the main drive. For more information regarding the load reduction of the drives refer to the VACON® NX Liquid Cooled User's Manual that is supplied with the main drive.

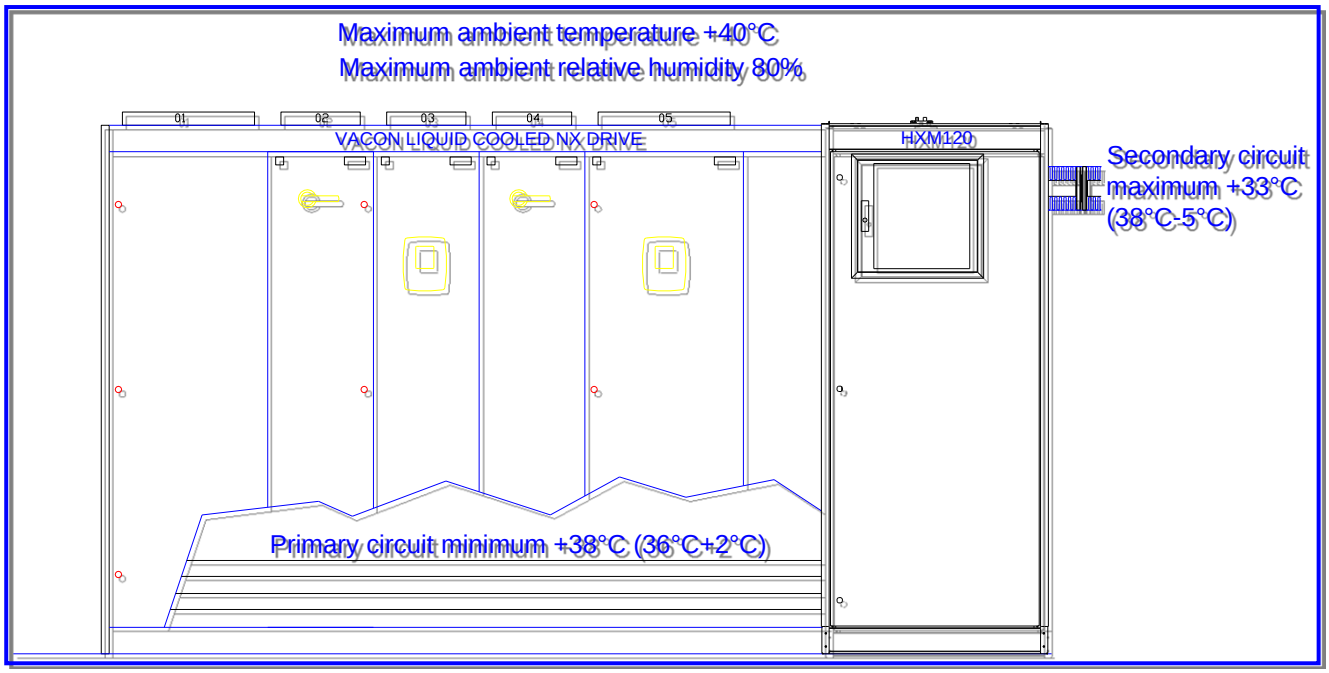

Figure 5.3-4 Example 2

The secondary circuit maximum temperature should always be 5°C lower than the primary circuit temperature to ensure a good thermal load transfer between the two circuits. In example 2 this means that the secondary circuit should be between +5...+33°C during operation. The 3-way valve in the secondary circuit will then keep the primary circuit temperature at 38°C regardless of the main drive load.

Example 2b, reducing the ambient relative humidity

If the load reduction isn't acceptable for the specified drive it is recommended that a humidity remover be installed that can reduce the maximum RH to an acceptable level. In example 2, a reduction of the maximum RH from 80% to 50% will allow the primary circuit temperature to be 30°C and therefore give the possibility to run the main drive at full load.

Ambient temperature = 40°C
Maximum relative humidity = ~~80%~~ 50%
Acc. to chart 3.3-1→Dew point is @ 28°C

When adding the safety margin of 2°C the primary circuit temperature can be set to 30°C. In this case a reduction of the maximum RH from 80% to 50%, by using a humidity remover, will allow the primary circuit temperature to be set to 30°C therefore allowing the main drives to be run at full load.

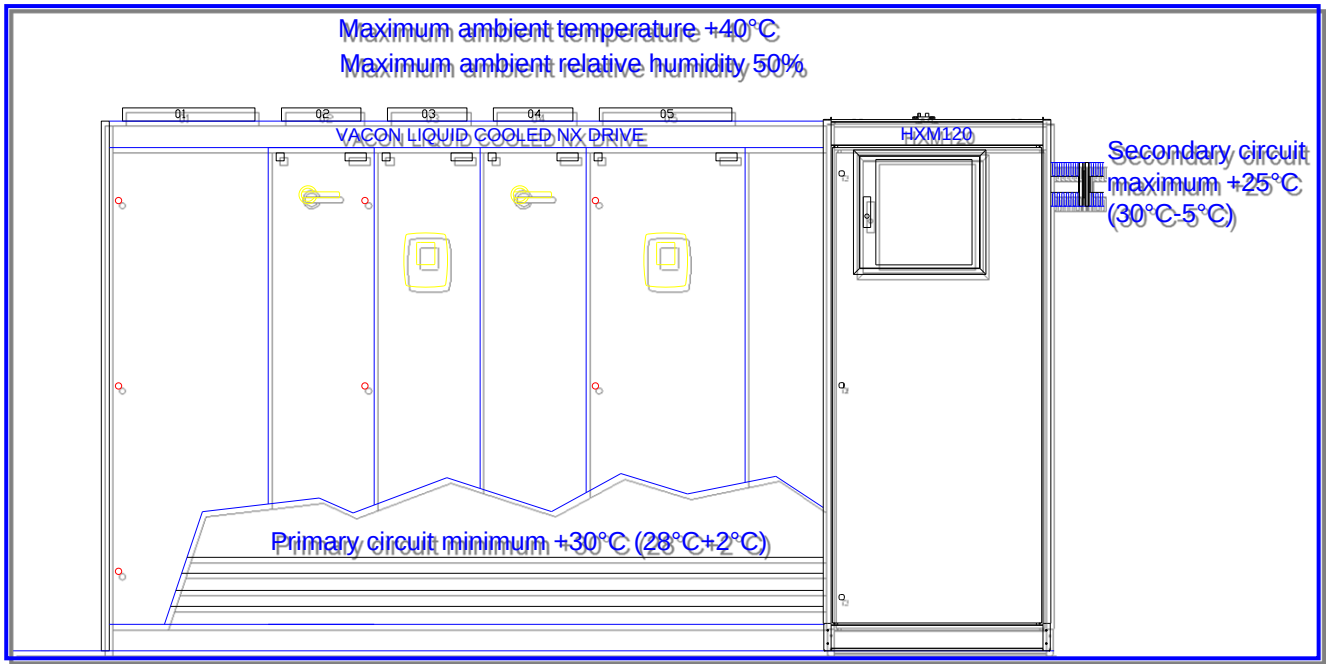

Figure 5.3-5 Example 2b

The secondary circuit maximum temperature should always be 5°C lower than the primary circuit temperature to ensure a good thermal load transfer between the two circuits. In example 2b this means that the secondary circuit should be between +5...+25°C during operation. The 3-way valve in the secondary circuit will then keep the primary circuit temperature at 30°C regardless of the main drive load.

Example 3, high secondary circuit temperature

If the customer has an existing cooling system that delivers liquid at a temperature of 40°C then the primary circuit temperature has to be 5°C warmer to maintain a sufficient heat transfer between the primary and secondary circuit. This means that the primary circuit temperature cannot be colder than 45°C. This results in a significant reduction of the main drive load. In this case the only way of increasing the load of the main drive is to lower the temperature in the secondary circuit by installing additional coolers or a new cooling system with a lower water temperature. Next the dew point must be checked.

Secondary circuit maximum temperature = 40°C
Primary circuit maximum temperature = 40°C (40°C+5°C)
Ambient temperature = 30°C
Maximum relative humidity = 95%

Because the ambient temperature is beneath the primary circuit temperature there is no risk of condensation in the main drive.

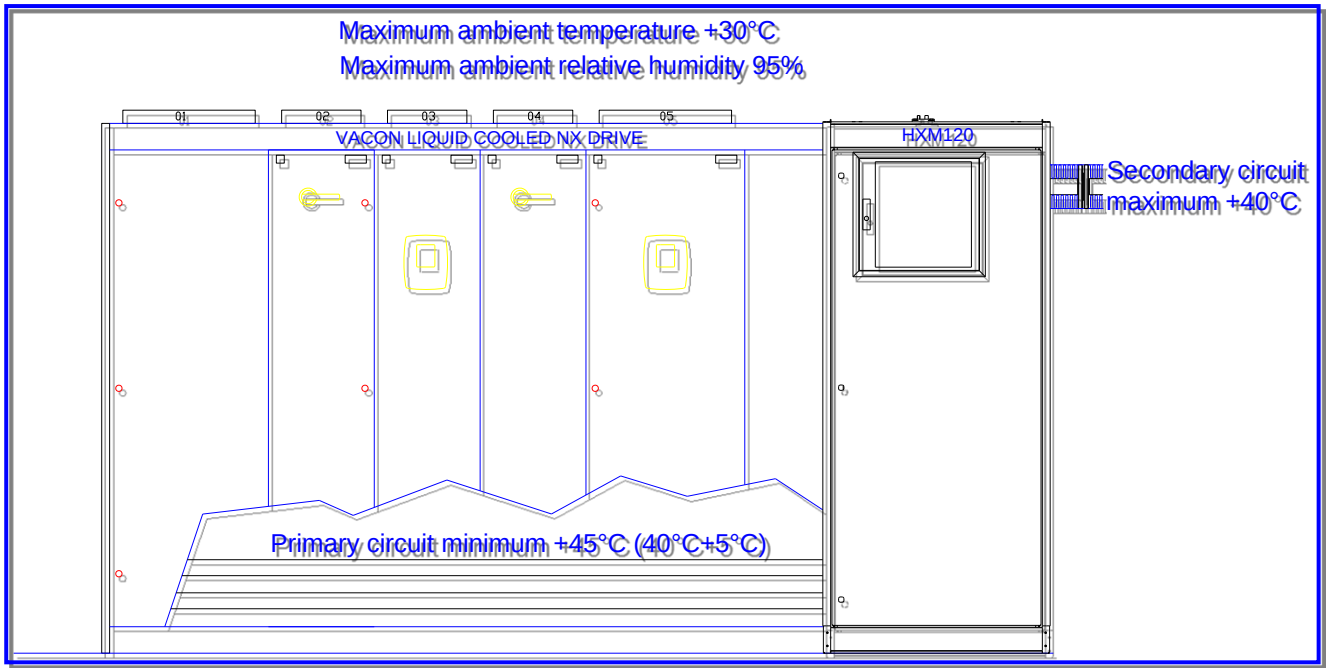

Figure 5.3-6 Example 3

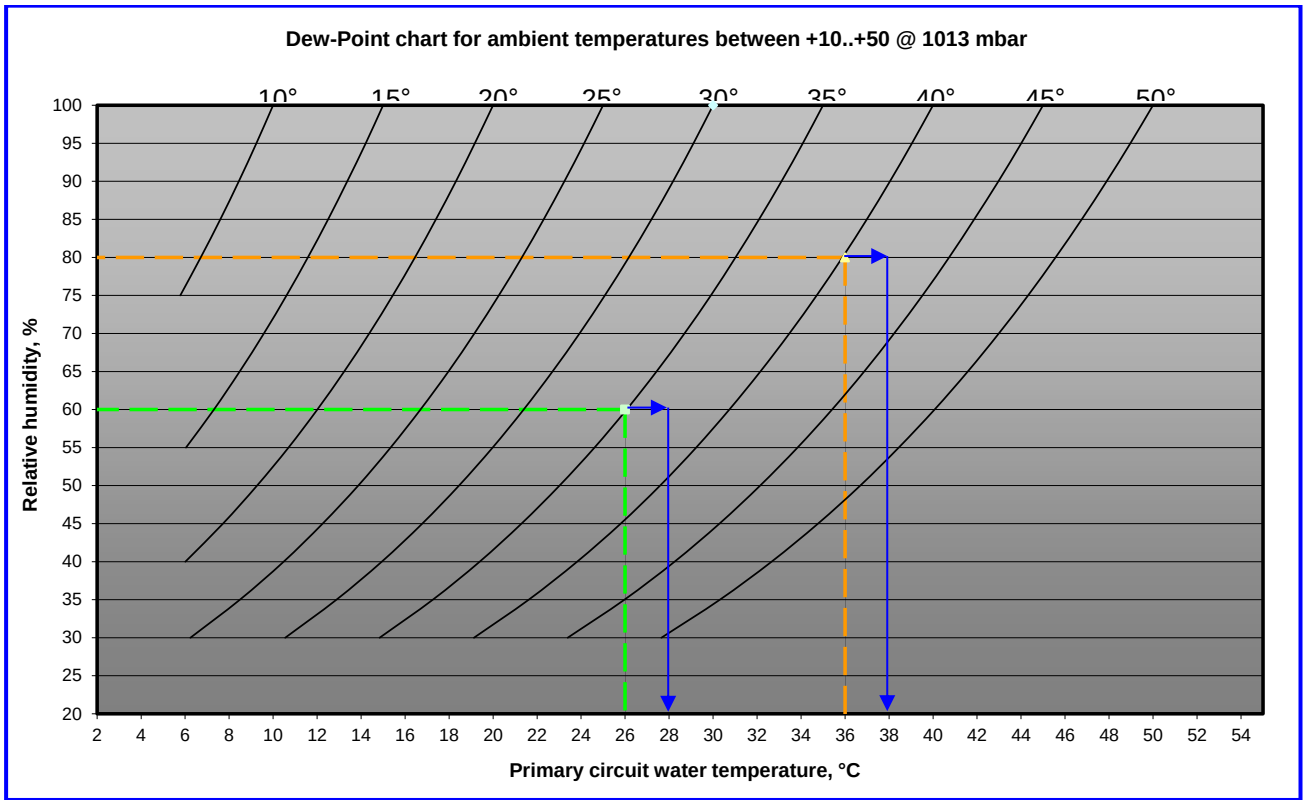

Chart 5.3-1 Dew-point chart

WARNING	No condensation is allowed inside the main drive. If condensation occurs the warranty is no longer valid.

Note that some VACON® liquid-cooled drives have a maximum ambient temperature of 40°C that would make a scenario with an ambient temperature over 40°C impossible. In a case like this it is

recommended to add a water/air condenser with built in fan to reduce the temperature inside the main drive cubicle. If a water/air condenser is used to regulate the temperature inside the main drive cubicle the drive must be made airtight (e.g. IP54).

A last resort is to install an air conditioner that can regulate both the humidity and the temperature at the installation (electrical room). This is a safe but usually a very expensive option.

If the temperature of the liquid in the secondary circuit is lower than the room temperature, and the relative humidity is high, condensation might occur on the secondary circuit piping and the plate heat exchanger inside the HX-unit. This is not dangerous, however nor is it desirable. If there appears condensation inside the HX-unit it might trigger the leak sensor (LS11) on the HX-unit floor and therefore giving some 'false' leak alarms. In a case like this it is recommended that the customer insulate the secondary circuit piping and the plate heat exchanger inside the HX-unit to stop the condensation and therefore avoid any more 'false' alarms.

On request the HX-unit secondary circuit and the plate heat exchanger can be insulated before delivery.

5.3.7 Temperature alarm settings

The temperature alarm levels depend on the primary circuit temperature set point. Refer to chapter 5.3.6, Temperature set points.

The over temperature alarm

- Activates a function that will activate the yellow indicator light on the HX-unit electrical box. The value is set to 3°C higher than the primary circuit temperature set point. The default setting of the high-temperature shutoff is 28°C.
- When this alarm is activated the HX-control unit panel will show the text 'A83 OverTempA'.

Example, over temperature alarm
The primary circuit temperature set point is set to 35 degrees, then the over temperature alarm parameter (P2.10.9) should be set to 38 degrees.

The over temperature fault

- Activates a function that will shut down the drives but will keep the HX-unit running, is set to 10°C higher than the primary circuit temperature set point. The default setting of the high-temperature shutoff is 40°C.
- When this alarm is activated the HX-control unit panel will show the text 'A83 OverTempA'. And both the red and the yellow indicators on the electrical box will be active.

Example, over temperature fault
The primary circuit temperature set point is set to 35 degrees, then the over temperature fault parameter (P2.10.10) should be set to 45 degrees.

The HX-unit over temperature fault is designed to work as protection in case of a sudden change in the primary circuit for example if the flow in the secondary circuit for some reason is stopped.

The low temperature alarm

- Activates a function that will activate the yellow indicator light on the HX-unit electrical box. The parameter is set to 3°C lower than the primary circuit temperature set point. The default setting of the high-temperature shutoff is 22°C.
- When this alarm is activated the HX-control unit panel will show the text 'A86 LowTemp'.

Example, low temperature alarm
The primary circuit temperature set point is set to 35 degrees, and then the low temperature alarm should be set to 32 degrees.

Example, all temperature values
A primary circuit temperature set point of 35°C has been calculated for a specific installation. The temperature parameters should be adjusted the following way:

- The primary circuit temperature set point (parameter P3.5) is set to 35°C
- New over-temperature alarm value (parameter 2.10.9) → 38°C
- New low-temperature alarm value (parameter 2.10.8) → 32°C
- New over-temperature fault value (parameter 2.10.10) → 45°C

The parameters are modified by using the HX Control box interface (VACON® NXP AC drive panel). Instructions on how to access and modify the parameters can be found in the VACON® NXP User's Manual that is supplied with the HX-unit.

5.3.8 Low pressure alarm

The function of the pressure sensor placed on the pump suctions side is to give the user a warning of low pressure before the FTSA11 flow switch generates a sudden unwanted shutdown. If there is a leak in the primary circuit, outside of the HX-unit, the pressure starts to reduce in the system. The set point for the pressure sensor is 0.5 bar, so if the pressure on the primary circuit suction side goes under 0.5 bar the yellow indicator light on the electrical box will activate. The correct system pre-pressure is found in the chapter 5.1.7, Adding liquid and de-airing.

 WARNING	If the suction pressure in the primary circuit is reduced due to a leak, the flow in the circuit will within a short period of time be insufficient and therefore activate a FTSA11 flow switch shutdown.

The low-pressure parameter number is P2.10.4. Follow the instructions in the VACON® NXP User's Manual on how to access and modify the parameters.

5.3.9 Leak switch alarm specifications

The leak sensor is a free standing sensor on to the leakage plate in the floor of the HX-unit. The function of the switch is only to alert the user, by switching on the yellow alarm indicator placed on the control box. The leak sensor generates an alarm if there is liquid on the floor plate inside the HX-unit due to a leak in the unit. If there is condensation inside the HX-unit, the leak switch can generate 'false' leak alarms.

NOTE	Note that no condensation is allowed. However, if the relative humidity within the cubicle is high and the ambient temperature is higher than the secondary circuit inlet temperature, condensation will occur on the secondary circuit piping.

If the secondary circuit inlet liquid temperature is not temperature controlled by the customer, there is a risk of condensation on the secondary circuit inlet piping.

Example: If the secondary circuit liquid inlet is 10°C and the ambient relative humidity inside the HX-unit cubical is 25% with a temperature of 20°C, condensation starts to occur in the secondary circuit inlet piping. These values can be found on a Mollier diagram that shows the behaviour of moist air in normal (1.013 bar) pressure.

If any condensation occurs, the customer must add insulation on the HX11 heat exchanger and on the secondary circuit piping, or increase the temperature in the secondary circuit inlet liquid. The maximum temperature of the secondary circuit inlet liquid is 25°C without having to reduce the load in the main drive. More information regarding the secondary circuit temperature is found in chapter 5.3.6, Temperature set points.

5.4 STEP 4, ADJUSTING THE FLOW

5.4.1 Starting the pump

Note that de-airing of the unit has to be done before the HX-pump can be started. To start the pumps for the first time:

WARNING	The pumps must not be run dry under any circumstances. Running the pump dry even for a short period of time might cause the shaft seal in the pump to start leaking.

1. Open the maintenance valves for the main drives (V310 to V31x) that are to be used.
2. Check that the valves V140...V143 are open and that V160 has the lever turned downwards.
3. Check that the valve V161 and V162 is closed. And that the pre-pressure is at 1.5 bar.
4. If the customer has added some valves these must also be in checked.
5. Check that there are no visible leaks.
6. If the electrical cables have been connected and checked, refer to chapter 5.2 STEP 2, ELECTRICAL PART, turn the main power switch (the red / yellow switch in Figure 4.2-7) to position "1".
7. It is recommended that the parameter P2.10.1 be changed to 30 Hz at first start-up. Later when the HX-unit is completely de-aired the P2.10.1 should be set to the correct value, refer to chapter 5.4.2, Adjusting the system flow and setting the switch point of the FTSA11.
8. Start up the pump PU11 or PU12 by turning the pump control switch to position "1" (the black and red switch in Figure 4.2-7). The liquid starts to circulate in the primary circuit. Run the pump for max. 30 sec. then do the same to the other pump.
9. Wait for 5 min. and open the manual de-airing valve V162 to let out any air that might have been stuck in the pump housing.
10. Add water to get the pressure back up to 1.5 bars. Then start one of the pumps again and leave it running.

11. The LED-display on the FTSA11 should register that there is flow in the system. If not, stop the pump and re-check that all valves are open, e.g. in the drive section, in the HX-unit and if there is piping/valves made by customer in the primary circuit then check them also. The flow switch is set to 50% as default and has a 5 second delay (the 5 second delay is programmed into the HX control unit application). What this means is that the flow has to get over the 50% limit within 5 seconds of starting the pump, or the HX control unit will shut down the pump.
12. If the pump is shut down and the HX control unit display is registering a flow fault, reset the fault from the VACON® NXP control panel, turn the pump control switch back to position "0" and try again (refer to the NXP 'All in one' manual on how to work the panel). If the pump does not stay online after three (3) attempts, de-airing has not been done correctly or some of the valves mentioned in step 1 and 2 are still closed. De-air the system again; refer to Chapter 5.1.7 Adding liquid and de-airing.
13. Check that all valves except V161...V163 and V301...V302 are open. If the pump does not stay online after a new de-airing, try to temporarily lower the flow switching point for the FTSA11 to 10% (50% as default). Information on how to modify the FTSA11 switching point is found in chapter 5.3.5, FTSA11 flow switch function.
14. If the pump stays online, run it for 15 minutes and then change the flow switch point back to the project-specific setup value. The flow switch point can be changed during operation.

During the first days of operation, the pre-pressure decreases because some air might be left in the system after de-airing.

To adjust the pressure:

1. Connect a filling hose to valve V161. De-air the filling hose before adding liquid to avoid air getting into the primary circuit.
2. Add liquid to increase the pressure back to 1.5 bar on the PI11 pressure gauge.
3. Close valve V161 and remove the hose.

5.4.2 Adjusting the system flow and setting the switch point of the FTSA11

The pump flow should be adjusted according to the required flow of the connected drives. Before adjusting the flow, the primary circuit has to be correctly filled and de-aired. The target flow can be calculated by adding up the nominal flow for the main drives connected to the HX-unit. For information on how to calculate the optimum system flow see the example below. To adjust the system flow:

1. Start up the pump and run it at 50 Hz, which is the default value in the HX control unit application.
2. Check the actual flow speed in percent from the flow switch FTSA11 and convert it into l/min by using the flow speed diagram 5.4-1 -5.4-4 (depending on the amount of glycol) or by using the converting formula.
3. Adjust the frequency of the pump to match the required total nominal flow + 10% (see example).

Example: If you are using 3 x Ch74 drive, the nominal flow according to the NX Liquid drive manual is 315 l/min. The flow should then be set to 'nominal flow' x 10%.

- Adjust the flow to 346 l/min (315 x 1.1) that is ~60% according to Diagram 5.4-1, by changing the frequency parameter P2.10.1 in the 'Flow control' part of the control unit application. The

default value of the parameter is 50Hz. Reduce the frequency by 2 Hz at a time until the FTSA11 display shows the value ~60%. The value shown on the FTSA11 is somewhat irregular in the beginning.

- The setting point for FTSA11 should be set at the nominal required flow -10%. The nominal flow for a Ch74 is 315 l/min, therefore the switch point should be set to 283 l/min (315 x 0.9). From the Diagram 5.4-1 we can establish that 283 l/min corresponds to ~50% on the FTSA11. Information on how to modify the switch point of the FTSA11 is found in chapter 5.3.5, FTSA11 flow switch function.
- If the actual flow goes under 45% (set point 50% - 5% hysteresis), the FTSA11 flow switch will open the switch (when the FTSA11 is set to 'normally closed', N.C). If the alarm disappears within 5 seconds, the control unit application filters out the alarm. If the alarm is still active after 5 seconds, the 'cooling OK' signal to the drives is disconnected, and both the HX-unit pump and the drives shut down.

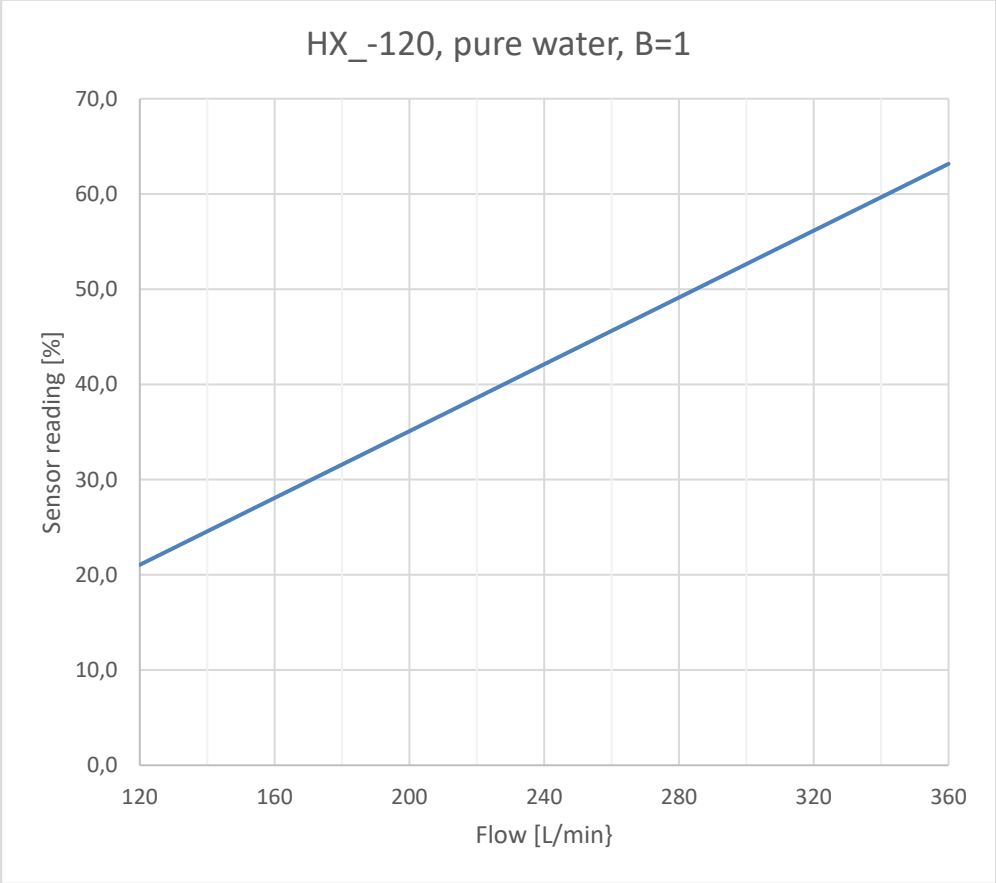

Diagram 5.4-1 Pure water, B=1

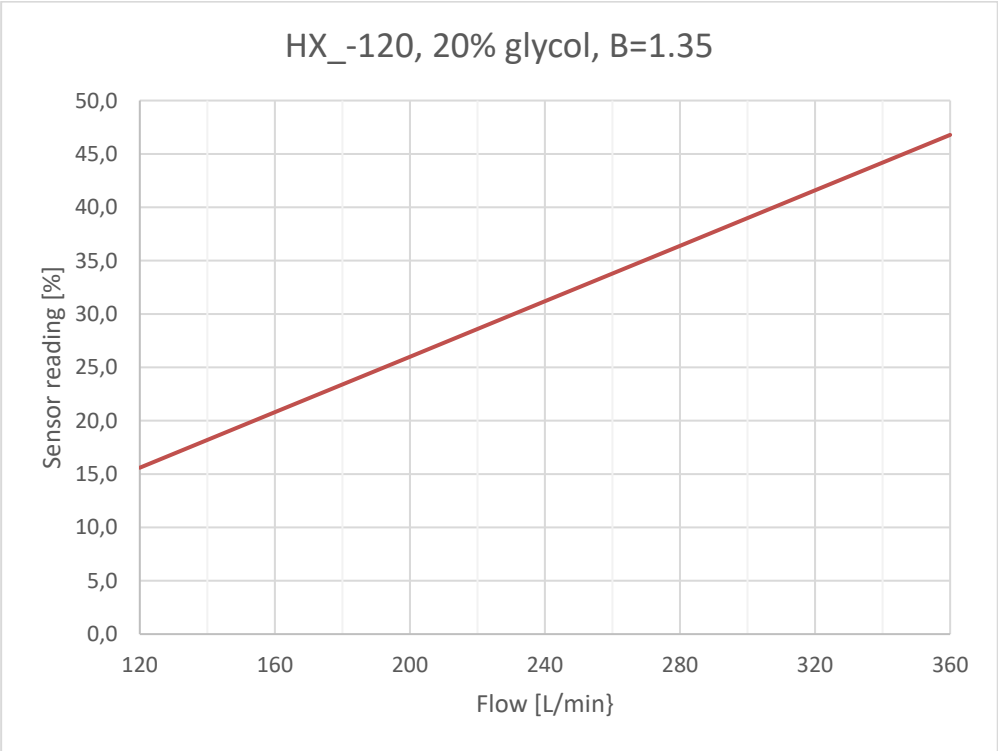

Diagram 5.4-2 20% glycol / 80% water, B=1.35

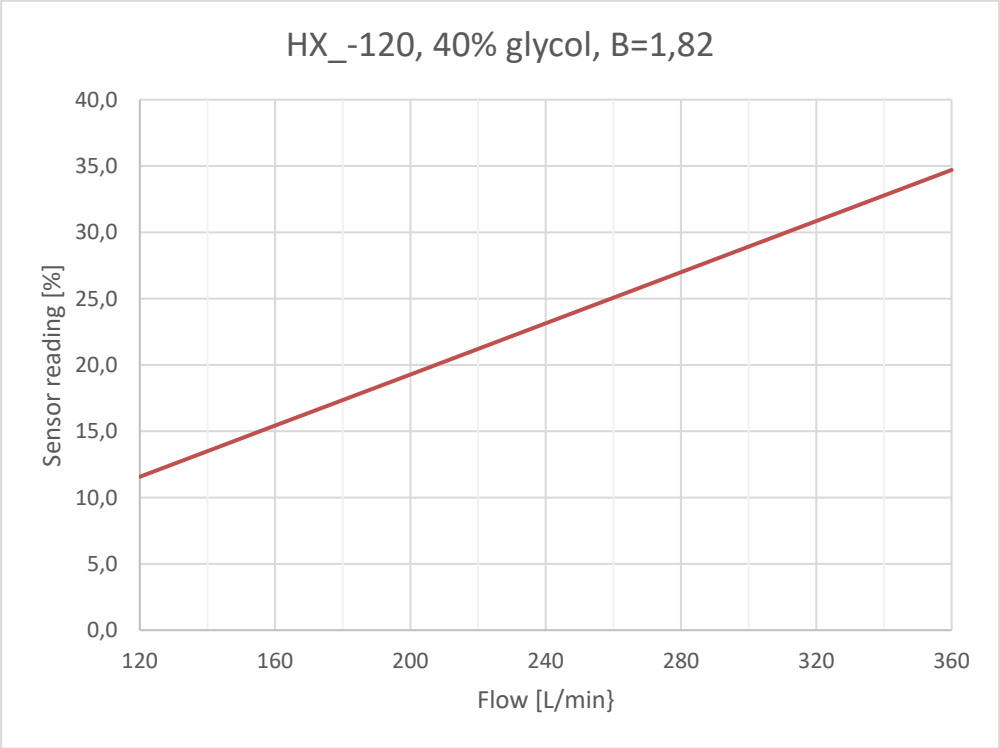

Diagram 5.4-3 40% glycol / 60% water -> B=1.82

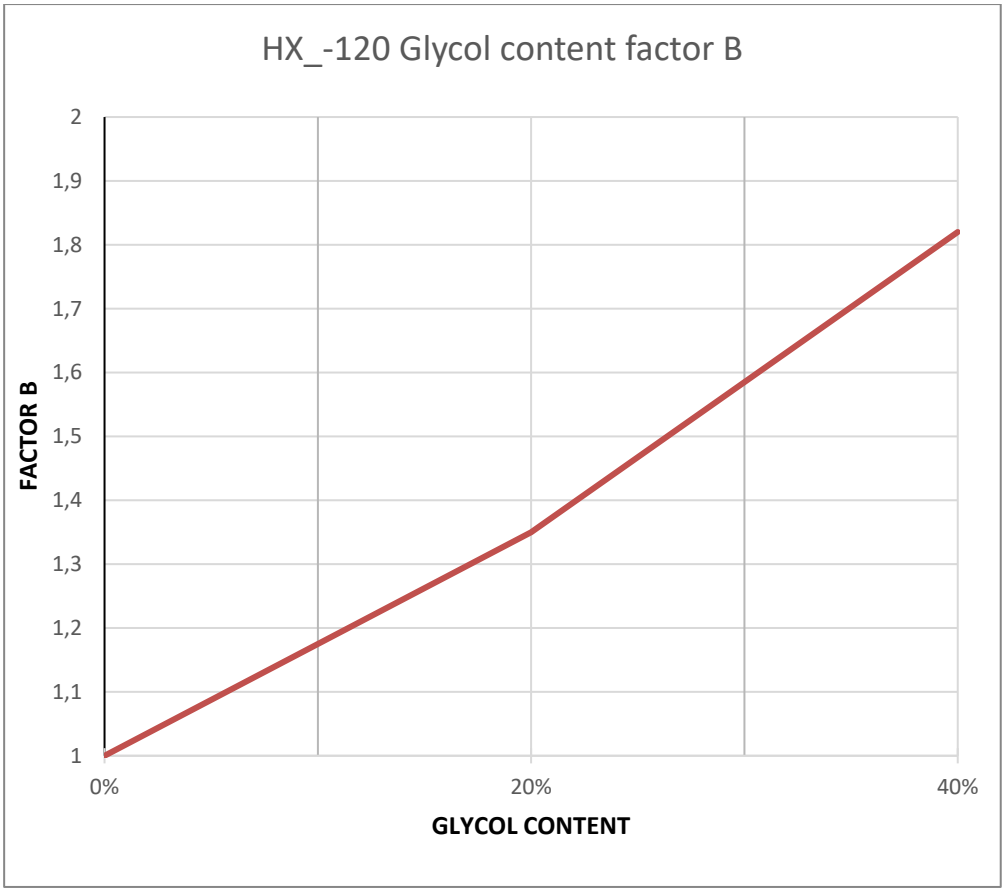

Diagram 5.4-4 Converting table for the FTSA11 flow switch

Converting formula for the FTSA11 flow switch:

HXM-120 AISI

x = 5.7 * y – B , where y = FTSA11 display (%)
x = flow l/min
B = Glycol content factor:
100% water -> B =1
20% glycol / 80% water -> B=1.35
40% glycol / 60% water -> B=1.82

y = x / 5.7 / B

5.4.3 Checklist before starting main NX drives

After the de-airing, when the control unit setup and the flow adjustment are performed and the HX-unit has been running for 30 minutes without any alarms, the main drive can be brought online. If there is more than one AC drive, it is recommended that they be started up one by one to avoid any sudden changes in the temperature. The load of the drives should also be increased step by step, otherwise the temperature might change too fast and cause an alarm, or in the worst case, a drive malfunction.

Before starting the drives:

1. Check that the HX-unit flow and temperature are within the given parameter values (no alarms).
2. Check that there is no air left in the plate heat exchanger by carefully opening the manual de-airing valve V162 and letting out a small amount (about 1 centilitre) of water.
3. Check that the PI11 pressure gauge is at about 1.5 bar.
4. Check that the maintenance valves to the AC drives (in use) V310...V31x are open.
5. Check that the flow (refer to FTSA11 converting table above) is according to the connected AC drive requirements.
6. Check that the primary circuit temperature is according to the setup value.
7. Check that there is no condensation in the main drive cubical. If there is condensation inside the drive cubicles, the drives must be dried out before start-up.

After successfully performing the different steps of commissioning presented in chapter 3, the HX-unit and the connected drives are ready to be moved from the commissioning stage to operation mode. Troubleshooting information and unit service information is located in the last two chapters of this manual. For further information contact your local distributor.

6. UNIT MAINTENANCE

6.1 GENERAL MAINTENANCE

6.1.1 Renewing liquid in the primary circuit

The liquid in the primary circuit should be renewed once every 5 years. The liquid in the primary circuit will be contaminated with particles from the different units and therefore the conductivity of the liquid will increase. When the conductivity of the liquid increases the risk of electrochemical reactions between the different alloys in the primary system also increases. Changing the liquid in the circuit every 5 years will reduce the risk of malfunction due to corrosion.

6.1.2 Maintenance schedule

There are a few systematic maintenance tasks that have to be followed to ensure a trouble free operation of the HX-unit. They are presented in the diagram below:

		Once a month	Once a year	Every 2 years	Every 5 years
Checking / adding the expansion vessel pre-pressure	Air		x		
	Nitrogen			x	
Changing the primary circuit liquid					x
Monthly inspection		x			

Diagram 6.1-1 Maintenance schedule

The **monthly inspection** includes the following tasks:

- Opening the HX-unit cubicle door and checking that no visible leaks can be found. If a leak is found the unit has to be shut down and the leak repaired.
- Checking that the primary circuit pressure at the PI11 is between 1.0 and 1.5 bar. If the pressure is too low it must be rectified.
- Check that the FTSA11 flow switch LED display is reading the same value as lasting the previous month. If the flow switch is showing <5% reduction of the installed value (at commissioning) then refer to chapter 7.1.1, Flow fault for advice.
- Check the temperature of the primary circuit by pressing the button on the FTSA11 marked once. Check the temperature value with the value set at commissioning. Press it once more to go back to reading the flow percentage.

The indicator lights on the HX electrical box should be monitored at all time. If the HX-unit is placed at a position where it isn't possible to monitor the indicators continuously, the Fieldbus interface of the HX control box can used to re-route the alarms to a place where they are monitored at all times. If it isn't possible to use the Fieldbus interface then the indicators on the HX electrical box must be moved to a position where they can be monitored at all times.

6.2 MAINTENANCE BY COMPONENT

 	Before maintenance shut off the electric power and the water supply to the system. Make sure the system is cooled and not pressurised for avoiding scalding and/or serious bodily injuries. Lock the main power switch to position "0" (zero) and mark up it while the HX-unit is in maintenance.
	Tightening torques see **Appendix 3** for PVC-C piping and **Appendix 4** for AISI304 piping.

6.2.1 Pump

The pumps PU11/12 (refer to the P&ID) do not require regular service. During the life cycle of the HX-unit, it is likely that the shaft seal will have to be changed at some point. The shaft seal between the pump housing and the motor is the most probable cause for leak on the centrifugal pump. When changing the shaft seal, follow the pump maintenance rules in the pump service instructions found in the Commissioning and Maintenance folder that is supplied with the HX-unit.

It is recommended that a reserve pump be stored locally in order to restore the operation quickly when a pump needs to be maintained. There should also be a shaft seal in storage to facilitate changing a broken or leaking shaft seal at site.

When the pump is leaking, remove the broken pump and replace it with a reserve pump. The broken pump should be fixed immediately and stored for later use in case a similar pump failure occurs. Purchase a new shaft seal from the unit manufacturer, and keep this in storage as well.

 	High-pressure hot coolant (6 bar, +60 °C) may be present in the primary cooling circuit. The coolant consists of liquid, propylene glycol and corrosion inhibitors, depending on the project. Glycol and corrosion inhibitors are damaging for the eyes. If you get coolant in your eyes, on your skin, or in your mouth, seek medical advice. **Use safety goggles**.

To change a pump:

1. Check that it is safe to turn off the drives connected to the HX-unit, and that there is enough time reserved for the maintenance.
2. Prepare the HX-unit for liquid filling by connecting a hose to the filling valve (V161). Read Chapter 5.1.7, Adding liquid and de-airing before continuing.
3. Take the main drives connected to the HX-unit offline, according to the VACON® NX Liquid Cooled User's Manual.
4. Shut down the power to the HX-unit by first turning both the pump control switches to "0", therefore shutting down the pump, then turning the main power switch to position "0", refer to Figure 4.2-7.

5. Check that there is no power coming to the pumps by removing the cover of the pump electrical connection box and measuring the voltage. No work on the unit is allowed when the power is connected.
6. Disconnect the electrical cables from the pump that is to be changed. Write down the order of the phases for later use.
7. Close the maintenance valves of the pump that is to be maintained (V140-V143). Refer to the P&ID in Figure 4.2-2 or the project specific P&ID if one is available.

NOTE	If the liquid contains corrosion inhibitors or other additives then check national or local ecological directives for information on how to dispose of the drained liquid. Information regarding the recommended corrosion inhibitor Cortec is found in the end of the Commissioning and Maintenance folder that is supplied with the unit.

8. Remove the bolts and nuts from the pump motor flange. Therefore leaving the pump housing in place (Figure 6.2-1). Note that there is a pre-pressure of 1.5 bars in the system; use safety goggles.
9. Lift out the pump from the HX-unit. Note the pump weight is about 50kg. It is recommended that there are two persons present when the pump is removed.
10. Perform the necessary maintenance on the pump and reconnect the pump to the pump housing. Or simply replace the pump if a spare pump is available.
11. Connect the electrical cables to the (new) pump motor.
12. Open the maintenance valves V140-V143.
13. Refill and de-air the pipes according to the instructions in chapter 5.1.6 and 5.1.7.

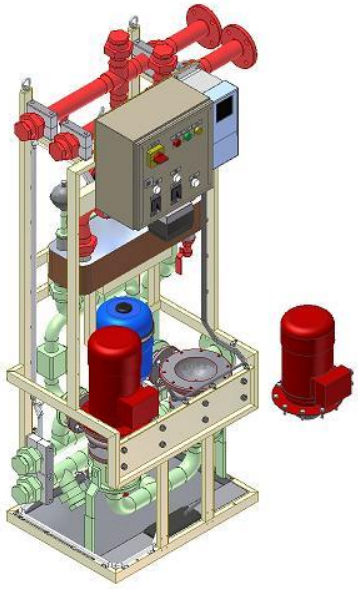

Figure 6.2-1

There are replacement parts available if there is a leak (e.g. shaft seal), or if the pumps are not able to keep sufficient pressure. Refer to the technical specifications of the pump for the replacement parts. The specifications can be found in the end of the Commissioning and Maintenance folder that is supplied with the HX-unit.

6.2.2 Heat exchanger

The heat exchanger does not need regular service. If the primary circuit temperature is too high (high-temperature alarm is active) and the 3-way valve directs all the liquid through HX11 (by-pass line closed), the flow is too low in one of the circuits or the temperature in the secondary circuit inlet is outside the defined parameter values. If the flow in the secondary circuit is too low, there may be some biological residue clogging the heat exchanger.

Because the primary circuit is filled with clean liquid, it is unlikely that the primary circuit's side of the heat exchanger clogs. Refer to the heat exchanger cleaning instructions found in the end of the Commissioning and Maintenance folder that is supplied with the HX-unit.

If the liquid used in the secondary circuit contains biological or chemical residue, it is recommended that a spare heat exchanger be stored locally. When the flow in the secondary circuit is too low, the HX-unit should be shut down and the heat exchanger replaced. The dirty heat exchanger should be cleaned according to manufacturer's instructions and placed in storage for the next time HX11 needs to be changed.

The HX11 can, if needed, be removed without removing the HX-unit from the cubicle:

1. Drain both the primary circuit and the secondary circuit. The secondary circuit is drained through the V163 valve (marked yellow in Figure 6.2-2). The primary circuit is drained through the valves V301 and V302 (refer to the P&ID in Figure 4.2-2).

   HXM120 AISI:

   Disconnect the primary and secondary circuit connections (marked violet in Figure 6.2-2) from the unit. The connections can be opened with a box wrench.

   HXM120 PVC-C:

   The connections can be opened by hand, or if needed use oil filter remover (used to remove the oil filter from cars). Be careful not to damage the connections.

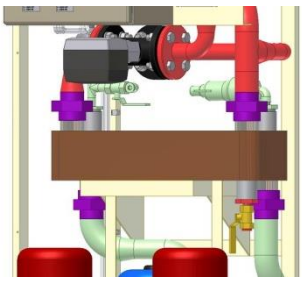

Figure 6.2-2

2. Remove the one M8 nut from underneath the heat exchanger (marked violet in Figure 6.2-3).

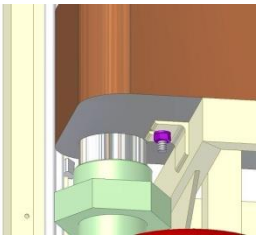

Figure 6.2-3

3. Carefully pull / lift / turn out the HX11 (Figure 6.2-4).

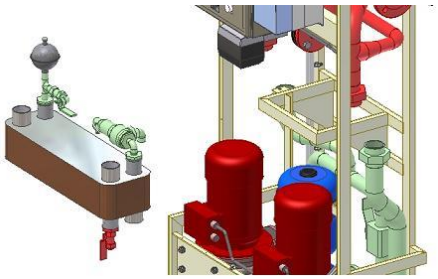

Figure 6.2-4

4. Replace the unit with a clean one, or clean the unit according to the manufacturer's instructions found in the end of the Commissioning and Maintenance folder that is supplied with the HX-unit.

5. Connect the clean unit in reverse order using the instructions above. Add liquid and de-air the unit according to the instructions in chapter 5.1.6 and 5.1.7.

The manufacturer provides cleaning chemicals that improve the cleaning result. If the secondary liquid quality is bad, it is recommended that these chemicals, and a reserve plate heat exchanger, be kept in storage.

6.2.3 Pressure vessel

If the vessel is pre-pressured with nitrogen, the vessel pre-pressure needs to be checked every other year. If air is used as the pre-pressuring gas, it has to be checked once a year. In time, the gas escapes through the butyl rubber membrane into the liquid circuit, and gas or air must be added. The pre-pressure can be checked without draining the primary circuit.

It is recommended that this procedure be done during a yearly maintenance.

WARNING	When performing maintenance work on a pressurized system generally acknowledged safety standards, EU directives and national regulations must also be followed. **Use safety goggles.**

To check the pre-pressure:

1. Remove the plug on valve V160 and replace it with a hose connector.
2. Place an eight (8) litre jar under the valve (if the expansion vessel air nozzle or membrane is broken there might be up to 8 litres in the vessel).
3. Turn the lever (marked violet in Figure 6.2-5) on valve V160 90° so that it points away from you (points towards the back wall). This will close off the primary circuit and therefore only the liquid in the expansion vessel will come out. (There is line mark in the end of the stem, where you can also ensure the right position of the 3-way valve. This mark shows the open flow direction.)
4. When the pressure vessel is drained check the pre-pressure with a portable pressure gauge. The air nozzle can be found under the black rubber top on the vessel. The portable pressure gauge should have a similar interface to that used to fill a car tyre.

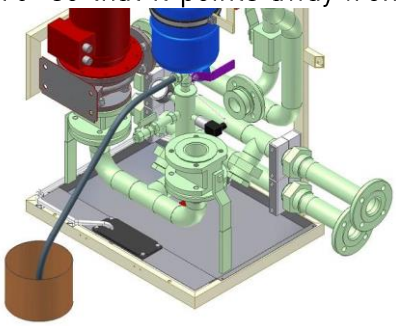

Figure 6.2-5

5. The pressure can be added with a nitrogen tank (pressure over 2 bar) or if air is used then a compressed air system or even a hand pump can be used.
6. Refill pressure if necessary. The pressure should be 100 kPa (1 bar). Use nitrogen if possible; otherwise air can also be used.
7. Reconnect the plug to valve V160, change the plug O-ring if necessary.
8. Turn back the lever on valve V160 90° so that it points down.
9. The pressure in the primary circuit will decrease due to the water that is removed during this process. Therefore water must be added through the filling valve V161 until the pressure on the pressure gauge (PI11) is back at 1.5 bar. Remember to de-air the filling hose before you connect it to valve V161, otherwise the air in the filling hose will enter the unit during filling.
10. Due to the small amount of liquid removed during this process it is not necessary to add any corrosion inhibitor.

7. TROUBLESHOOTING

7.1 Alarms and shutoffs

This chapter provides help in case the HX-control unit activates an alarm or fault. An alarm or fault is activated, because the HX-unit is working outside the parameter settings in the HX-control unit. The pre-set parameters for the HX-unit are shown in chapter 5.3.2, Application parameter list.

7.1.1 Flow fault

If the **flow fault shutoff** is active (acc. to panel below) the HX-unit pump has stopped and the 'Cooling OK' signal to the main drive has been disconnected. The red indicator light on the electrical box door is also active. Check the following issues to solve why the alarm has been activated:

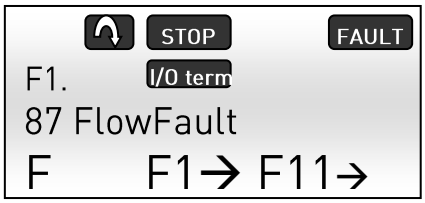

Figure 7.1-1, Flow fault on the NXP panel

Malfunction	Reasons for malfunction	Correction measures
The pre-pressure is too low in the primary circuit, i.e. below 0.5 bar.	• The pre-pressure in the expansion vessel EV11 has been reduced.	Check the EV11 pre-pressure and add pressure if necessary. Add pre-pressure to the primary circuit by adding liquid through valve V161.
	• There is a leak in the primary circuit.	Check the primary circuit for leaks. If a leak is found the unit must be drained and the leak fixed before the unit is restarted.
The pump isn't delivering enough pressure i.e. the flow is too low.	A valve in the primary circuit is closed.	Check if any of the following valves in the primary circuit is closed (refer to the P&ID): • V140...143 • V310...3xx • Any valves in the primary circuit added by the customer
	The pump is broken.	Replace the broken pump.
The FTSA11 is set incorrectly (this is a fault that is most likely to appear during maintenance or at the commissioning stage).	• The flow requirement has changed after the commissioning stage.	Check the current flow requirements, they might have changed if e.g. an AC drive is taken offline (and its valves closed) because of maintenance.
	• The FTSA11 setup values have been poorly adjusted during commissioning.	Check the required flow values for the AC drives and readjust the alarm set point on the FTSA11 (refer to chapter 5.4.2 Adjusting the system flow and setting the switch point of the FTSA11).

Table 7.1-1, Flow fault detection

7.1.2 Temperature alarms and shutoffs

If the **high temperature alarm** is active (acc. to panel below) the HX-unit is still online and the 'Cooling OK' signal to the main drive is connected. The yellow and green indicator lights on the electrical box door are also active. Check the following issues to solve why the alarm has been activated:

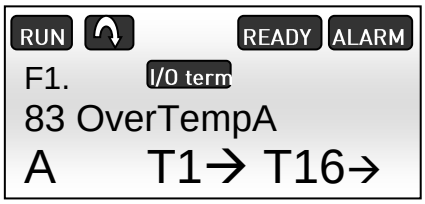

Figure 7.1-2, High temperature alarm on the NXP panel

Malfunction	Reasons for malfunction	Correction measures
The flow in the secondary circuit is too low.	• The customer filter, outside the HX-unit, MF21 (refer to the P&ID) is clogged.	Clean the filter.
	• The plate heat exchanger HX11 (refer to the P&ID) is clogged on the secondary side.	Clean the heat exchanger. Refer to the cleaning instructions found in the HX-unit folder that is supplied with the unit. Instructions on how to remove the plate heat exchanger are found in chapter 6.2.2, Heat exchanger.
	• The customer pump in the secondary circuit is malfunctioning and therefore not able to produce enough flow.	• Maintain or replace the customer circuit pump.
The temperature of the secondary circuit liquid is too high.	Maintaining the HX-unit cannot solve the reason for this malfunction.	The temperature of the liquid in the secondary circuit inlet has to be 5 degrees lower than the primary circuit temperature set point, e.g. if the primary circuit temperature set point is set to 35°C then the secondary circuit inlet temperature must be 30°C or lower.
The regulating valve V130 is malfunctioning	• The 3-way valve V130 is malfunctioning and therefore not directing enough flow through the plate heat exchanger to ensure a satisfactory heat transfer between the primary and secondary circuit.	Run the actuator calibration according to the instructions found in the HX-unit folder that is supplied with the unit, i.e. set the actuator Dip-switch 1 to 'On' position. If the actuator is not moving during this procedure it is broken and has to be replaced.
	• The FTSA11 setup values have been wrongly adjusted during commissioning.	Check the project parameters (refer Table 3.3-1, Parameter list) and compare it with the actual temperature.

Table 7.1-2 High temperature fault detection

If the **high temperature shutoff** is active (same panel layout as high temperature alarm) the HX-unit is online but the 'Cooling OK' signal to the main drive has been disconnected. The yellow and red indicator lights on the electrical box door are active. The reasons for this shutoff are the same as for the high temperature alarm.

If the **low temperature alarm** is active (acc. to panel below) the HX-unit is still online and the 'Cooling OK' signal to the main drive is connected. The yellow and green indicator lights on the electrical box door are also active. Check the following issues to solve why the alarm has been activated:

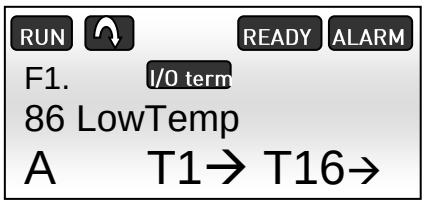

Figure 7.1-3, Low temperature alarm on the NXP panel

Malfunction	Reasons for malfunction	Correction measures
The regulating valve V130 (refer to the P&ID) is malfunctioning	The 3-way valve V130 is malfunctioning and therefore directing too much flow through the plate heat exchanger.	Run the actuator calibration according to the instructions found in the HX-unit manual that is supplied with the unit, i.e. set the actuator Dip-switch 1 to 'On' position. If the actuator is not moving during this procedure it is broken and has to be replaced.
	The inlet temperature on the secondary circuit is decreasing too fast, and the 3-way valve is not able to adjust the flow in the secondary circuit fast enough	Wait for two minutes and see if the alarm is reset automatically. If the alarm is active longer than two minutes, check the 3-way valve's function. If the 3-way valve or the valve actuator is malfunctioning it must be replaced. If the temperature in the primary circuit is too low it will result in condensation in the main drive section. No condensation is allowed. The temperature in the secondary circuit should not be allowed to decrease or increase too fast. A change of 1°C / minute should not be exceeded.
The FTSA11 (refer to the P&ID) flow sensor with the analogical temperature outlet is malfunctioning.	The FTSA11 flow sensor with the analogical temperature outlet is broken.	Check the temperature by comparing the FTSA11 temperature with the secondary circuit temperature indicator TI21. The temperature of FTSA11 should be higher than the TI21 temperature. Replace the FTSA11 if necessary. If a TI21 is not installed then check the primary circuit temperature (using a portable measuring device) and compare it to FTSA11. To get an accurate value the portable temperature gauge must be connected close to the FTSA11. Replace the FTSA11 if necessary.

Table 7.1-3, Low temperature fault detection

7.1.3 Low pressure alarm

If the **low pressure alarm** is active (acc. to panel below) the HX-unit is still online and the 'Cooling OK' signal to the main drive is connected. The yellow and green indicator lights on the electrical box door are also active. Check the following issues to solve why the alarm has been activated:

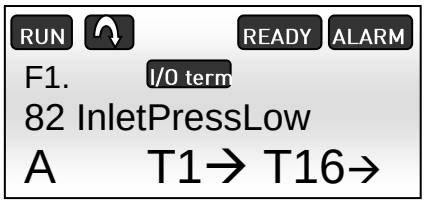

Figure 7.1-4, Low pressure alarm on the NXP panel

Malfunction	Reasons for malfunction	Correction measures
Leak in the primary circuit outside the HX-unit.	Loose connection.	Tighten the connection until the leak stops. Add liquid to the primary circuit until the correct pre-pressure is reached. Follow the instructions in chapter 5.1.7, Adding liquid and de-airing.
	Faulty connection.	Replace the broken parts. Then add liquid to the primary circuit until the correct pre-pressure is reached. Follow the instructions in chapter 5.1.7, Adding liquid and de-airing.
	Hose failure in the main drive section.	Replace the hose. Refer to the NX Liquid Cooled User's Manual. Then add liquid to the primary circuit until the correct pre-pressure is reached. Follow the instructions in chapter 5.1.7, Adding liquid and de-airing.
Pressure vessel EV11 (refer to the P&ID) is without pre-pressure.	The gas (air or nitrogen) has escaped through the butyl rubber membrane into the primary circuit.	Check and refill the pre-pressure according to the instructions in chapter 6.2.3 Pressure vessel.
	The EV11 filling valve is broken and therefore letting out gas.	Replace the valve and refill the pre-pressure according to the instructions in chapter 6.2.3 Pressure vessel.
	The butyl membrane inside the expansion vessel is broken.	Replace the expansion vessel and refill the pre-pressure according to the instructions in chapter 6.2.3 Pressure vessel.
Other reason.	Faulty pressure sensor	Compare the value from the pressure gauge, PI11, with the value from the pressure transmitter PT11. If the pressure transmitter is broken it has to be replaced.

Table 7.1-4, Pressure fault detection

7.1.4 Leak alarms

If the **leak alarm** is active (acc. to panel below) the HX-unit is still online and the 'Cooling OK' signal to the main drive is connected. The yellow and green indicator lights on the electrical box door are also active. Check the following issues to solve why the alarm has been activated:

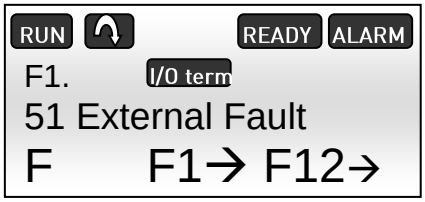

Figure 7.1-5, Leak alarm on the NXP panel

Malfunction	Reasons for malfunction	Correction measures
Leak	Loose connection.	Tighten the connection until the leak stops. Add liquid to the primary circuit until the correct pre-pressure is reached. Follow the instructions in chapter 5.1.7, Adding liquid and de-airing.
	Faulty connection.	Replace the broken parts. Then add liquid to the primary circuit until the correct pre-pressure is reached. Follow the instructions in chapter 5.1.7, Adding liquid and de-airing.
Condensation	The secondary circuit liquid temperature is too low in regard to the ambient temperature and relative humidity.	If the cooling process allows it then increase the secondary circuit inlet liquid temperature until the condensation stops. Decrease the humidity or the temperature in the cubicle until the condensation stops. If there is condensation on the secondary circuit piping, insulate the secondary circuit pipes and the plate heat exchanger, HX11.
Other reason	No condensation or leak is found but the alarm is still active.	Try resetting the alarm on the reset switch. It is the push button in the lower right corner of the HX-unit electrical box door. Try to wipe off the sensor and the leakage plate with a dry cloth. If the yellow light is still on then the sensor is most likely broken and will need to be replaced.

Figure 7.1-5, Leak fault detection

8. TECHNICAL SPECIFICATION

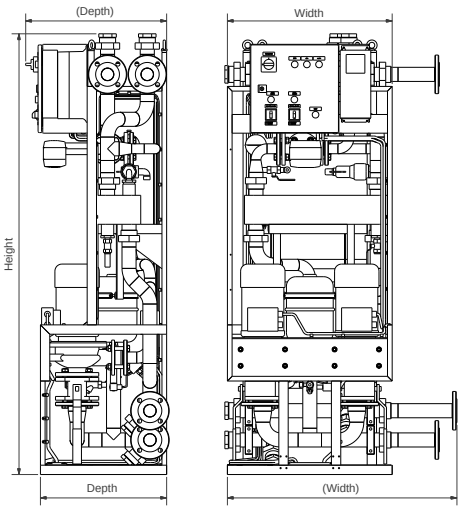

Physical size (without cubicle):
- Width, 705mm (982mm)
- Height, 1885mm AISI304, 1872mm PVC-C
- Depth, 540mm (603mm)

Liquid connections:
- Primary circuit, Rp 2" (ISO 7/1) or DN50 DIN 2642
- Secondary circuit, Rp 2" (ISO 7/1) or DN50 DIN 2642 (PN10), DIN 2633 (PN16)

Electrical supply:
- 3 ~, 400VAC (50Hz) or 3 ~, 440VAC (60Hz), 16 A
- 3 ~, 400 – 500VAC (50/60Hz) , 16A (when sinifilter)

Other electrical connection:
- 24V auxiliary voltage (between HX-unit and main drive)
- Option, Fieldbus (Profibus) connection from the HX-control unit to customer monitoring system

Sound pressure level:
- The A-weighted sound pressure level doesn't exceed 70dB(A)

Ambient conditions:
- +5..+50°C
- RH 5..96%, no condensation allowed

Pressure ratings:
- Primary circuit, PN6
- Secondary circuit (customer piping), PN10 (Option; PN16 for AISI 304 piping)

Temperature ratings:
- Primary circuit, +5..+50°C
- Secondary circuit, +5..+50°C

Storage temperature rating:
- -40..+60°C
- All liquid must be removed from the unit during storage if the temperature is below 0°C.

Cooling capacity:
- 120 kW

Rate of flow range: [1)]
- 120-360 l/min

Empty weight of HX-unit (self supporting frame version):
- 240 kg, PVC-C (+165kg for Rittal cubicle and +190 kg for VEDA cubicle)
- 300 kg, AISI304 (+165kg for Rittal cubicle and +190 kg for VEDA cubicle)

Maximum input power:
- 3.6 kW

Supply pressure / Supply distance (primary circuit): [2]
- 0.7 bar / 25 m + 25 m straight pipe [3]

Liquid volume, primary side:
- 25.5 liter

Concentration of glycol
- maximum 25%

Maximum flow secondary circuit: [4]
- 360l/min

Pressure drops on customer circuit (= secondary circuit), see **Appendix 1**.

[1] Note! Combined nominal flow of AC drives must not exceed 90% of the maximum rate of flow.

[2] Maximum straight pipe distance between HX-unit and drive for achieving maximum flow. Elbows and other components will reduce the pipe distance.

[3] Pipeline to AC drive (25 m) and back (25 m). If customer pipelines are long, size of the pipelines must be DN32 or DN40.

[4] The pressure before 3- or 2-way valve must be at least 2 bar to prevent cavitations.
See cavitations diagram in Components Specifications and Maintenance Instructions n:o 2 , TAC Venta, page 2.

APPENDIX 1

Pressure drops on customer circuit. HX_120 equipped with V311 3-way valve

100% FLOW = 360 l/min						
Plate heat exchanger route	**Flow**	**Bypass route**	**Flow**	**Pressure drop plate heat exchanger**	**Pressure drop 3-way valve**	**Total pressure drop**
100%	360 l/min	0%	0	0.5 bar	1.83 bar	**2.33 bar**
75%	270 l/min	25%	90 l/min	0.25 bar	1.83 bar	**2.08 bar**
50%	180 l/min	50%	180 l/min	0.116 bar	1.83 bar	**1.95 bar**
25%	90 l/min	75%	270 l/min	0.03 bar	1.83 bar	**1.86 bar**
0%	0	100%	360 l/min	-	1.83 bar	**1.83 bar**

=> Pressure drop varies between 1.83 bar – 2.33 bar

75% FLOW = 270 l/min						
Plate heat exchanger route	**Flow**	**Bypass route**	**Flow**	**Pressure drop plate heat exchanger**	**Pressure drop 3-way valve**	**Total pressure drop**
75%	270 l/min	0%	0	0.25 bar	1.03 bar	**1.28 bar**
50%	180 l/min	25%	90 l/min	0.116 bar	1.03 bar	**1.146 bar**
25%	90 l/min	50%	180 l/min	0.03 bar	1.03 bar	**1.06 bar**
0%	0	75%	270 l/min	-	1.03 bar	**1.03 bar**

=> Pressure drop varies between 1.03 bar – 1.28 bar

50% FLOW = 180 l/min						
Plate heat exchanger route	**Flow**	**Bypass route**	**Flow**	**Pressure drop plate heat exchanger**	**Pressure drop 3-way valve**	**Total pressure drop**
50%	180 l/min	0%	0	0.116 bar	0.46 bar	**0.58 bar**
25%	90 l/min	25%	90 l/min	0.03 bar	0.46 bar	**0.49 bar**
0%	0	50%	180 l/min	-	0.46 bar	**0.46bar**

=> Pressure drop varies between 0.46 bar – 0.58 bar

APPENDIX 2

Pressure drops on customer circuit. HX_120 equipped with 2057DT 3-way valve

100% FLOW = 360 l/min						
Plate heat exchanger route	**Flow**	**Bypass route**	**Flow**	**Pressure drop plate heat exchanger**	**Pressure drop 3-way valve**	**Total pressure drop**
100%	360 l/min	0%	0	0.5 bar	0.16 bar	**0.66 bar**
75%	270 l/min	25%	90 l/min	0.25 bar	0.16 bar	**0.41 bar**
50%	180 l/min	50%	180 l/min	0.116 bar	0.16 bar	**0.28 bar**
25%	90 l/min	75%	270 l/min	0.03 bar	0.16 bar	**0.19 bar**
0%	0	100%	360 l/min	-	0.16 bar	**0.16 bar**

=> Pressure drop varies between 0.16 bar – 0.82 bar

75% FLOW = 270 l/min						
Plate heat exchanger route	**Flow**	**Bypass route**	**Flow**	**Pressure drop plate heat exchanger**	**Pressure drop 3-way valve**	**Total pressure drop**
75%	270 l/min	0%	0	0.25 bar	0.11 bar	**0.36 bar**
50%	180 l/min	25%	90 l/min	0.116 bar	0.11 bar	**0.23 bar**
25%	90 l/min	50%	180 l/min	0.03 bar	0.11 bar	**0.16 bar**
0%	0	75%	270 l/min	-	0.11 bar	**0.11 bar**

=> Pressure drop varies between 0.11 bar – 0.47 bar

50% FLOW = 180 l/min						
Plate heat exchanger route	**Flow**	**Bypass route**	**Flow**	**Pressure drop plate heat exchanger**	**Pressure drop 3-way valve**	**Total pressure drop**
50%	180 l/min	0%	0	0.116 bar	0.04 bar	**0.16 bar**
25%	90 l/min	25%	90 l/min	0.03 bar	0.04 bar	**0.07 bar**
0%	0	50%	180 l/min	-	0.04 bar	**0.04 bar**

=> Pressure drop varies between 0.04 bar – 0.20 bar

APPENDIX 3

Tightening torques of PVC-C HX-unit:

Bolt tightening torque guidelines for metric flange connections with PP-V, PP-steel and PVC flanges					
Nominal diameter DN	**Pipe diameter d**	**Number of screws x thread diameter**	**Bolt tightening torque (Nm)**		
			Flat gasket up to max. pressure of 10 bar / 40°C	**Profile gasket up to max. pressure of 16 bar**	**O-ring up to max. pressure of 16 bar**
15	20	4 x M12	10	10	10
20	25	4 x M12	10	10	10
25	32	4 x M12	15	10	10
32	40	4 x M16	20	15	15
40	50	4 x M16	25	15	15
50	63	4 x M16	35	20	20
65	75	4 x M16	50	25	25
80	90	8 x M16	30	15	15

Thread connections (unions, adapters) tightening torque: For plastic threads, it is generally sufficient to tighten by hand with an additional ½ rotation using a suitable tool, in order to realize a tight seal. The pipe wrenches customarily used in steel pipe construction are not permissible. For bigger sizes, a pipe wrench with belt can be used. Never use force when installing plastic fittings. It is especially important that the pipe installation is low stress.

APPENDIX 4

Tightening torques of AISI304 HX-unit:

Bolt tightening torque for flange connections with Tesnit BA-S gasket s=2mm Max. temperature +50°C, flange DIN2642 PN10					
Nominal diameter DN	**Number of screws x thread diameter**	**Bolt tightening torque (Nm)**			
		8.8 (bolt material)		**10.9 (bolt material)**	
		Min torque	**Max torque**	**Min torque**	**Max torque**
25	4 x M12	79	96	79	143
32	4 x M16	127	233	127	344
40	4 x M16	160	233	160	344
50	4 x M16	201	233	201	344
65	4 x M16			269	344
80	8 x M16			330	344

Bolt tightening torque for flange connections with Tesnit BA-S gasket s=2mm Max. temperature +50°C, flange DIN2633 PN16					
Nominal diameter DN	**Number of screws x thread diameter**	**Bolt tightening torque (Nm)**			
		8.8 (bolt material)		**10.9 (bolt material)**	
		Min torque	**Max torque**	**Min torque**	**Max torque**
25	4 x M12	82	96	82	143
32	4 x M16	131	233	131	344
40	4 x M16	166	233	166	344
50	4 x M16	208	233	208	344
65	4 x M16			279	344
80	8 x M16	171	233	171	344

Thread connections: Steel threads tighten by pipe wrench or other suitable tool.

VACON®

www.danfoss.com

Document ID:
DPD01308D
Rev. D

Sales code: DOC-INSNXHXM120+DLUK

Vacon Ltd
Member of the Danfoss Group
Runsorintie 7
65380 Vaasa
Finland

*) To be cold insulated, e.g. with polyethylene, if the temperature of the liquid in the secondary circuit is lower than the ambient temperature and the relative humidity is high.

**) Alternative pump:
Pump KL, 6.4A, 3x400V, 50Hz, JP151, 3kW, PN10, motor turned 180°, Kolmeks, KL401602300

Pipe name	PN10	PN16
PS02-1	HX_120-PS02-1	HX_120-PS04-2
PS02-2	HX_120-PS02-2	HX_120-PS04-3
PS02-3	HX_120-PS02-3	HX_120-PS04-4

Code	Pcs.	Material	Note.	Name	Nominal pressure
PU11..12 **)	2	AISI304 / 316	Vacon delivery	Pump Ebara EB 3M 40-160/3, 3x400V /50 Hz, 3kW	PN10
HX11	1	AISI316 / Cu-brazed	Vacon delivery	Plate heatexchanger 2" / 1 1/2"	PN25
HXA11	1	Cu / Al	Vacon delivery (option)	Water/Air heatexchanger 3/4"	-
EV11	1	AISI304 / Butyl	Vacon delivery	Pressure vessel 3/4", pre-pressured to 100kPa, cap.8 litre Connection stainless steel, inside vessel epoxy coating, butyl diaphragm	PN10
MF21..22	2	-	Vacon delivery (option)	Y-Strainer	-
AD11	1	AISI304 / 316	Vacon delivery	Automatic de-airing unit 3/8"	PN16
FTSA11	1	AISI304 / 316	Vacon delivery	Flowswitch 1/2", with analog temperature outlet	PN60
PI11	1	AISI304 / 316	Vacon delivery	Pressure indicator 1/4", 0-10 bar	PN20
PT11	1	AISI304 / 316	Vacon delivery	Pressure transmitter 1/4", 0-10 bar	PN20
TI21	1	-	Vacon delivery (option)	Temperature indicator 1/2", 0-60°C	-
LS11	1	-	Vacon delivery	Leakage switch 24V AC/DC, 70mA	-
V120	1	AISI304 / 316	Vacon delivery	Safety valve 1/2", reliefpressure 6bar Body bronze, nozzle and disc stainless steel	PN25
V130 (FV11)	1	ASTM A351-CF8M	Vacon delivery	Regulating valve 3-way valve 2057DT, DN32 + GR24A-MF-R actuator	PN16
V140..41	2	AISI304 / 316	Vacon delivery	Ballvalve DN40 Body CF8M, end connections and ball AISI 316	PN64
V142..43	2	AISI304 / 316	Vacon delivery	Ballvalve DN65	PN16
V150	1	AISI304 / 316	Vacon delivery	Non-return valve 1/2"	PN40
V160	1	AISI304 / 316	Vacon delivery	Ballvalve 3-way 3/4", threaded	PN64
V161..63	3	AISI304 / 316	Vacon delivery	Ballvalve 1/2"	PN64
V170	1	AISI304 / 316	Vacon delivery (option)	Ballvalve 1/2"	-
V180	1	Brass	Vacon delivery (option)	Balancing valve 1/2"	-
V190..91	2	AISI304 / 316	Vacon delivery	Non-return valve DN40	PN16
V201..05	5	-	Vacon delivery (option)	Ballvalve	-
V301..02	2	AISI304 / 316	Projectspecific delivery	Ballvalve 1/2", threaded	-
V31x..	-	AISI304 / 316	Projectspecific delivery	Ballvalve 1/2", threaded	-
NXP0009 5	1	-	Vacon delivery	Frequency converter, NXP 0009 5A5H1 SSS A1A2B5B5C5	-

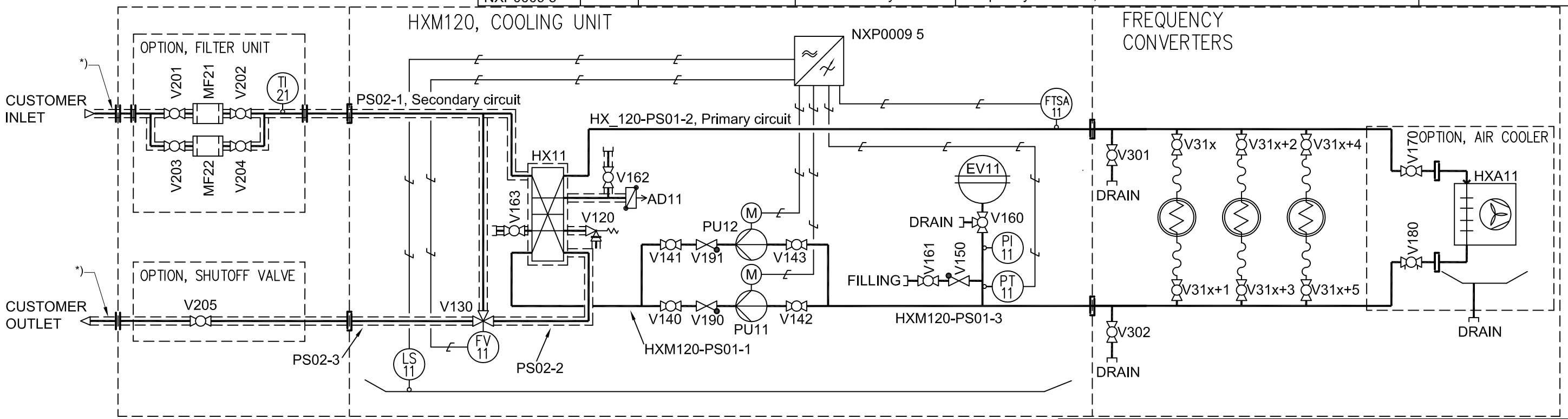

REV.	DATE	MADE	APPR	DESCRIPTION
b	23.10.2013	Toni Honkakangas	U. Kähtävä	3-way valve and actuator changed
a	28.11.2008	A-M. Haka	U. Kähtävä	Pumps changed

VACON
DRIVEN BY DRIVES

Project	**STD HX-unit**
Customer	-
Doc. no.	
Cust. ref.	

Title
HXM120
AISI304 Piping
P&ID

Prepared	A-M. Haka 26.06.2007	DCC	&
Checked	U. Kähtävä 26.06.2007	Based on	VL39-5033-05, VL39-5033-15
Approved	J-P.Sampola 26.06.2007	Proj. no	-
	Vacon Oyj	Doc. no.	**VL39-5030-10**
		Revision	**b**

Object	=
Loc.	+
Sheet	**1/1**
Cont.	

VL39-5030-10a.dwg

Vacon
P.O BOX 25 (Runsorintie 7)
65381 Vaasa, Finland
Tel.: +358 (0)201 212 000
Fax:

VACON
DRIVEN BY DRIVES

Project number:	HXM120L
Description of Project:	HXM120
Customer:	Delivery address:
Drive system:	
Project manager:	-
Designer: LEHTIMÄKI	Total number of pages: 11
Modification date: 10.07.2014	

This revision of the heat exchanger circuit diagrams requires the Flow Control - application ASFIF125V414 or newer to work according to the design/documentation.

A	12.09.2006	ML	LS11 Changed
C	13.04.2007	ML	Q2 AND Q3 AUX CONTACTS
D	01.06.2007	ML	F1, F2, T1, V1, terminals

VACON DRIVEN BY DRIVES

Project HXM120	Title	Prepared lebeima 03.07.2014	DCC	Object = 01	
Customer	Title page	Checked -	Based on	Loc. + 01	
Cust. ref.		Vacon	Proj. nr HXM120L / Doc. nr VL39-5035 / Revision L	Sheet 1	
				Cont. 2	

Table of contents

VACON

Page	Page describition	Drawing number	Last editor	Date
=01/1	Title page	VL39-5035		03.07.2014
=01/2	Table of contents	VL39-5035		04.07.2014
=01/3	Parts list: (NXOPTA 1 - WDK2.5)	VL39-5035		04.07.2014
=01/4	Cable list	VL39-5035		04.07.2014
=01/5	Interconnect diagram	VL39-5035		04.07.2014
=01/6	Interconnect diagram	VL39-5035		04.07.2014
=01/7	Interconnect diagram	VL39-5035		04.07.2014
=01/8	Wire list	VL39-5035		04.07.2014
=01/9	Terminal diagram	VL39-5035		04.07.2014
=01/10	HXM120	VL39-5035		04.07.2014
=01/11	HXM120	VL39-5035		03.07.2014

A	LS11 Changed	ML	12.09.2006
C	Q2 AND Q3 AUX CONTACTS	ML	13.04.2007
D	F1, F2, T1, V1, terminals	ML	01.06.2007

Object = 01
Loc. + 01
Sheet 2
Cont. 3

Revision L
Doc. nr VL39-5035

DCC
Based on
Proj. nr HXM120L

Prepared lebeima 04.07.2014
Checked -

Vacon

Project HXM120
Customer
Cust. ref.

Title
Table of contents

VACON DRIVEN BY DRIVES

Parts list

VACON

Part number	Amount	Description	Model Number	Manufacturer	ID	Function text	Page/Path
NXOPTA 1	1	I/O CARD NXOPTA 1		VACON	=01-A11	Basic I/O	=01+01/10-2D
NXOPTB 5	1	I/O OPTION CARD NXOPTB 5		VACON	=01-A12	3xR0	=01+01/10-2D
NXOPTA 2	1	I/O CARD NXOPTA 2		VACON	=01-A13	2xR0	=01+01/10-4D
NXOPTC 5	1	I/O CARD NXOPTC 5		VACON	=01-A14	Profibus-DP	=01+01/10-6D
AFE	1	LEAKAGE SENSOR	AFE	KÜBLER	=01-B1		=01+01/10-5B
AE 1380.500	1	CABINET	AE 1380.500	RITTAL	=01-CABIN		=01+01/10-8F
GV-AN11	1	AUX.CONTACTS FOR GV2	3781180	TELEMECANIQUE	=01-F1		=01+01/10-1B
GV2-P14	1	MOTOR PROTECTION RELAY 6-10A	3781147	TELEMECANIQUE	=01-F1		=01+01/10-1B
GV2APN02	1	DOOR HANDLE	GV2APN02	TELEMECANIQUE	=01-F1		=01+01/10-1B
XB5-AVB1	1	INDICATION LAMP WH.24VDC	XB5-AVB1	TELEMECANIQUE	=01-H1	whitestop	=01+01/10-4F
GL110 24Vdc	1	LEAKAGE DETECTOR	GL11024Vdc	KÜBLER	=01-LS11		=01+01/10-4B
MT78740	1	RELAY BASE	MT78740	SCHRACK	=01-LS11		=01+01/10-4B
NXP 0009 5	1	FREQUENCY CONVERTER	NXP 0009 5	VACON	=01-U1	NXP 009 5	=01+01/10-1D
C60N 3P C6	1	MINIATURE CIRCUIT BREAKER 6A		MERLIN&GERIN	=01+01-F2		=01+01/10-8B
XB5-AVB3	1	INDICATION LAMP GREEN.24VDC	XB5-AVB3	TELEMECANIQUE	=01+01-H2	greenrun	=01+01/10-5F
XB5-AVB5	1	INDICATION LAMP OR.24VDC	XB5-AVB5	TELEMECANIQUE	=01+01-H3	yellowalarm	=01+01/10-5F
XB5-AVB1	1	INDICATION LAMP WH.24VDC	XB5-AVB1	TELEMECANIQUE	=01+01-H4	whitevalidpump 1	=01+01/10-4F
XB5-AVB1	1	INDICATION LAMP WH.24VDC	XB5-AVB1	TELEMECANIQUE	=01+01-H5	whitevalidpump 2	=01+01/10-4F
XB5-AVB4	1	INDICATION LAMP RED.24VDC	XB5-AVB4	TELEMECANIQUE	=01+01-H6	redtrip	=01+01/10-6E
LC1 D09 BL	1	CONTACTOR 24VDC	LC1 D09 BL	TELEMECANIQUE	=01+01-K1		=01+01/11-5E
LC1 D09 BL	1	CONTACTOR 24VDC	LC1 D09 BL	TELEMECANIQUE	=01+01-K2		=01+01/11-6E
PLC-RSC-24DC/21	1	AUX RELAY+BASE	2966171	PHOENIX	=01+01-K3		=01+01/10-6F
PLC-RSC-24DC/21	1	AUX RELAY+BASE	2966171	PHOENIX	=01+01-K4		=01+01/10-6E
OT 16FT3	1	LOAD SWITCH	OT16FT3	ABB	=01+01-Q2		=01+01/10-1E
OA1G10	2	AUX. CONTACT 1NO		ABB	=01+01-Q2		=01+01/10-1E
OHBS3PH	1	HANDLE	OHBS3PH	ABB	=01+01-Q2		=01+01/10-1E
OT 16FT3	1	LOAD SWITCH	OT16FT3	ABB	=01+01-Q3		=01+01/10-2E
OA1G10	2	AUX. CONTACT 1NO		ABB	=01+01-Q3		=01+01/10-2E
OHBS3PH	1	HANDLE	OHBS3PH	ABB	=01+01-Q3		=01+01/10-2E
ZB5-AA2+ZB5-AZ105	1	RESET BUTTON		TELEMECANIQUE	=01+01-S2		=01+01/10-5A
SL5.300	1	POWER SUPPLY	SL5.300	PULS	=01+01-T1		=01+01/10-8C
WDK4D	1	DIODE TERMINAL	WDK4D	WEIDMUELLER	=01+01-V1		=01+01/10-3B
WDK2.5	20	TERMINAL	102910	WEIDMUELLER	=01+01-X1		

A	12.09.2006	ML
C	13.04.2007	ML
D	01.06.2007	ML

A	LS11 Changed
C	Q2 AND Q3 AUX CONTACTS
D	F1, F2, T1, V1, terminals

VACON DRIVEN BY DRIVES

Project	HXM120	Title	
Customer		Parts list: (NXOPTA 1 - WDK2.5)	
Cust. ref.			

Prepared	lebeima	04.07.2014	DCC	Object	= 01
Checked	-		Based on	Loc.	+ 01
Vacon			Proj. nr	Doc. nr	Revision
			HXM120L	VL39-5035	L
				Sheet	3
				Cont.	4

Cable list

VACON

Cable designations	From	To	Cable type	Length	Remark
=01+01-W0	=01-F1	=01-U1	LKSM-HF 4x2,5 S		
=01+01-W1	=01-U1	=01+01-Q2	LKSM-HF 4x2,5 S		
=01+01-W2	=01-M1	=01+01-K1	LKSM-HF 4x2,5 S		
=01+01-W3	=01-M2	=01+01-K2	LKSM-HF 4x2,5 S		
=01+01-W4	=01-FTSA11	=01-A11			
=01+01-W5	=01+01-X1	=01-A11	JAMAK-C 2x(2+1)x0,5		
=01+01-W6	=01+01-X1	=01-A11	RFA-HF(i) 4x(2+1)x0,5		
=01+01-W7	=01-LS11	=01-B1	JAMAK-C 2x(2+1)x0,5		
=01+01-W8	=01+01-X1	=01-FV11			
=01+01-W9	=01+01-X1	=01-PT11	JAMAK-C 2x(2+1)x0,5		
=01+01-W10	=01+01-X1	=01-A11	ÖLFLEX 110 CH 18x16AWG (1,5)		

A	12.09.2006	ML
C	13.04.2007	ML
D	01.06.2007	ML

A LS11 Changed
C Q2 AND Q3 AUX CONTACTS
D F1, F2, T1, V1, terminals

VACON DRIVEN BY DRIVES

Project HXM120	Title Cable list	Prepared lebeima 04.07.2014	DCC	Object = 01	
Customer		Checked -	Based on	Loc. + 01	
Cust. ref.		Vacon	Proj. nr HXM120L / Doc. nr VL39-5035 / Revision L	Sheet 4	
				Cont. 5	

CABLE No.	TYPE	CORE	FROM	TERMINAL	TO	TERMINAL	REMARK
=01+01-W0	LKSM-HF 4x2,5 S	ye-gn					=01+01/10-1C
=01+01-W0	LKSM-HF 4x2,5 S	bn	=01-F1	1	=01-U1	L1	=01+01/10-1C
=01+01-W0	LKSM-HF 4x2,5 S	wh	=01-F1	3	=01-U1	L2	=01+01/10-1C
=01+01-W0	LKSM-HF 4x2,5 S	bk	=01-F1	5	=01-U1	L3	=01+01/10-1C
=01+01-W1	LKSM-HF 4x2,5 S	ye-gn	=01-U1	PE	=01	gr	=01+01/10-1D
=01+01-W1	LKSM-HF 4x2,5 S	bn	=01-U1	U	=01-Q2	1	=01+01/10-1D
=01+01-W1	LKSM-HF 4x2,5 S	wh	=01-U1	V	=01-Q2	3	=01+01/10-1D
=01+01-W1	LKSM-HF 4x2,5 S	bk	=01-U1	W	=01-Q2	5	=01+01/10-1D
=01+01-W2	LKSM-HF 4x2,5 S	ye-gn	=01-M1	PE	=01	gr	=01+01/10-1F
=01+01-W2	LKSM-HF 4x2,5 S	bn	=01-M1	U1	=01-K1	2	=01+01/10-1F
=01+01-W2	LKSM-HF 4x2,5 S	wh	=01-M1	V1	=01-K1	4	=01+01/10-1F
=01+01-W2	LKSM-HF 4x2,5 S	bk	=01-M1	W1	=01-K1	6	=01+01/10-1F
=01+01-W3	LKSM-HF 4x2,5 S	bk	=01-M2	W1	=01-K2	6	=01+01/10-2F
=01+01-W3	LKSM-HF 4x2,5 S	bn	=01-M2	U1	=01-K2	2	=01+01/10-2F
=01+01-W3	LKSM-HF 4x2,5 S	wh	=01-M2	V1	=01-K2	4	=01+01/10-2F
=01+01-W3	LKSM-HF 4x2,5 S	ye-gn	=01-M2	PE	=01	gr	=01+01/10-2F
=01+01-W4		4bk	=01-FTSA11	PNP	=01-A11	9	=01+01/10-2C
=01+01-W4		3bu	=01-FTSA11	L-(blue)	=01-A11	13	=01+01/10-2C
=01+01-W4		1bn	=01-FTSA11	L+(brown)	=01-A11	12	=01+01/10-2C
=01+01-W4		wh	=01-FTSA11	AO(white)	=01-A11	4	=01+01/10-2C
=01+01-W5	JAMAK-C 2x(2+1)x0,5	1r	=01-X1	35	=01-A11	14	=01+01/11-2D
=01+01-W5	JAMAK-C 2x(2+1)x0,5	1b					=01+01/11-2D
=01+01-W5	JAMAK-C 2x(2+1)x0,5	1sh					=01+01/11-2D
=01+01-W5	JAMAK-C 2x(2+1)x0,5	2r	=01-X1	37	=01-A11	15	=01+01/11-2D
=01+01-W5	JAMAK-C 2x(2+1)x0,5	2b	=01-X1	38	=01-A11	8	=01+01/11-2D
=01+01-W5	JAMAK-C 2x(2+1)x0,5	2sh					=01+01/11-2D
=01+01-W5	JAMAK-C 2x(2+1)x0,5	SH					=01+01/11-2D
=01+01-W6	RFA-HF(i) 4x(2+1)x0,5	1w	=01-X1	10	=01-A11	2	=01+01/10-2B
=01+01-W6	RFA-HF(i) 4x(2+1)x0,5	1b					=01+01/10-2B
=01+01-W6	RFA-HF(i) 4x(2+1)x0,5	1sh					=01+01/10-2B
=01+01-W6	RFA-HF(i) 4x(2+1)x0,5	2w	=01-X1	28	=01-A11	3	=01+01/10-2B
=01+01-W6	RFA-HF(i) 4x(2+1)x0,5	2b	=01-X1	29	=01-A11	5	=01+01/10-2B
=01+01-W6	RFA-HF(i) 4x(2+1)x0,5	2sh					=01+01/10-2B
=01+01-W6	RFA-HF(i) 4x(2+1)x0,5	3w	=01-X1	30	=01-A11	7	=01+01/10-2B
=01+01-W6	RFA-HF(i) 4x(2+1)x0,5	3b	=01-V1	K	=01-A11	6	=01+01/10-2B

A	12.09.2006	ML
C	13.04.2007	ML
D	01.06.2007	ML

A LS11 Changed
C Q2 AND Q3 AUX CONTACTS
D F1, F2, T1, V1, terminals

VACON
DRIVEN BY DRIVES

Project	HXM120	Title	Interconnect diagram
Customer			
Cust. ref.			

Prepared	lebeima	04.07.2014	DCC
Checked	-		Based on
Vacon			Proj. nr: HXM120L; Doc. nr: VL39-5035; Revision: L

Object = 01
Loc. + 01
Sheet 5
Cont. 6

CABLE No.	TYPE	CORE	FROM	TERMINAL	TO	TERMINAL	REMARK
=01+01-W6	RFA-HF(i) 4x(2+1)x0,5	3sh					=01+01/10-2B
=01+01-W6	RFA-HF(i) 4x(2+1)x0,5	4w	=01-X1	39	=01-A11	18	=01+01/10-2B
=01+01-W6	RFA-HF(i) 4x(2+1)x0,5	4b					=01+01/10-2B
=01+01-W6	RFA-HF(i) 4x(2+1)x0,5	4sh					=01+01/10-2B
=01+01-W6	RFA-HF(i) 4x(2+1)x0,5	SH					=01+01/10-2B
=01+01-W7	JAMAK-C 2x(2+1)x0,5	1r	=01-LS11	7	=01-B1	2	=01+01/10-5B
=01+01-W7	JAMAK-C 2x(2+1)x0,5	1b	=01-LS11	6	=01-B1	1	=01+01/10-5B
=01+01-W7	JAMAK-C 2x(2+1)x0,5	1sh					=01+01/10-5B
=01+01-W7	JAMAK-C 2x(2+1)x0,5	2r					=01+01/10-5B
=01+01-W7	JAMAK-C 2x(2+1)x0,5	2b					=01+01/10-5B
=01+01-W7	JAMAK-C 2x(2+1)x0,5	2sh					=01+01/10-5B
=01+01-W7	JAMAK-C 2x(2+1)x0,5	SH					=01+01/10-5B
=01+01-W8		2rd	=01-X1	6	=01-FV11	+	=01+01/10-7E
=01+01-W8		1bk	=01-X1	26	=01-FV11	-	=01+01/10-7E
=01+01-W8		3wh	=01-X1	39	=01-FV11	Y	=01+01/10-7E
=01+01-W8		5og	=01-X1	40	=01-FV11	U	=01+01/10-7E
=01+01-W9	JAMAK-C 2x(2+1)x0,5	1r	=01-X1	10	=01-PT11	2	=01+01/10-6C
=01+01-W9	JAMAK-C 2x(2+1)x0,5	1b	=01-X1	2	=01-PT11	1	=01+01/10-6C
=01+01-W9	JAMAK-C 2x(2+1)x0,5	1sh					=01+01/10-6C
=01+01-W9	JAMAK-C 2x(2+1)x0,5	2r					=01+01/10-6C
=01+01-W9	JAMAK-C 2x(2+1)x0,5	2b					=01+01/10-6C
=01+01-W9	JAMAK-C 2x(2+1)x0,5	2sh					=01+01/10-6C
=01+01-W9	JAMAK-C 2x(2+1)x0,5	SH					=01+01/10-6C
=01+01-W10	ÖLFLEX 110 CH 18x16AWG (1,5)	1	=01-X1	12	=01-A11	10	=01+01/10-3C
=01+01-W10	ÖLFLEX 110 CH 18x16AWG (1,5)	2	=01-K4	A2	=01-A11	20	=01+01/10-3C
=01+01-W10	ÖLFLEX 110 CH 18x16AWG (1,5)	3	=01-X1	16	=01-A12	22	=01+01/10-3C
=01+01-W10	ÖLFLEX 110 CH 18x16AWG (1,5)	4	=01-X1	17	=01-A12	23	=01+01/10-3C
=01+01-W10	ÖLFLEX 110 CH 18x16AWG (1,5)	5	=01-X1	31	=01-A12	25	=01+01/10-3C
=01+01-W10	ÖLFLEX 110 CH 18x16AWG (1,5)	6	=01-X1	33	=01-A12	26	=01+01/10-3C
=01+01-W10	ÖLFLEX 110 CH 18x16AWG (1,5)	7	=01-X1	32	=01-A12	28	=01+01/10-3C
=01+01-W10	ÖLFLEX 110 CH 18x16AWG (1,5)	8	=01-X1	34	=01-A12	29	=01+01/10-3C
=01+01-W10	ÖLFLEX 110 CH 18x16AWG (1,5)	9	=01-X1	15	=01-A13	21	=01+01/10-3C
=01+01-W10	ÖLFLEX 110 CH 18x16AWG (1,5)	10	=01-X1	19	=01-A13	22	=01+01/10-3C
=01+01-W10	ÖLFLEX 110 CH 18x16AWG (1,5)	11	=01-X1	20	=01-A13	23	=01+01/10-3C
=01+01-W10	ÖLFLEX 110 CH 18x16AWG (1,5)	12	=01-X1	21	=01-A13	24	=01+01/10-3C

13.04.2007 ML
01.06.2007 ML
Q2 AND Q3 AUX CONTACTS
F1, F2, T1, V1, terminals

VACON
DRIVEN BY DRIVES

Project HXM120
Customer
Cust. ref.

Title
Interconnect diagram

Prepared lebeima 04.07.2014
Checked
Vacon

DCC
Based on
Proj. nr HXM120L
Doc. nr VL39-5035
Revision L

Object = 01
Loc. + 01
Sheet 6
Cont. 7

CABLE No.	TYPE	CORE	FROM	TERMINAL	TO	TERMINAL	REMARK
=01+01-W10	ÖLFLEX 110 CH 18x16AWG	(1,5) 13	=01-X1	22	=01-A13	25	=01+01/10-3C
=01+01-W10	ÖLFLEX 110 CH 18x16AWG	(1,5) 14	=01-X1	23	=01-A13	26	=01+01/10-3C
=01+01-W10	ÖLFLEX 110 CH 18x16AWG	(1,5) 15					=01+01/10-3C
=01+01-W10	ÖLFLEX 110 CH 18x16AWG	(1,5) 16					=01+01/10-3C
=01+01-W10	ÖLFLEX 110 CH 18x16AWG	(1,5) 17					=01+01/10-3C
=01+01-W10	ÖLFLEX 110 CH 18x16AWG	(1,5) PE					=01+01/10-3C

A	Q2 AND Q3 AUX CONTACTS	ML 13.04.2007
C	F1, F2, T1, V1, terminals	ML 01.06.2007
D		

VACON DRIVEN BY DRIVES

Project HXM120	Title Interconnect diagram	Prepared lebeima 04.07.2014	DCC	Object = 01	
Customer		Checked	Based on	Loc. + 01	
Cust. ref.		Vacon	Proj. nr HXM120L / Doc. nr VL39-5035 / Revision L	Sheet 7	Cont. 8

Wiring list

Wire design.	Source	Target	Type of wire	Color	⎅
F1_2	=01+01-F2:1	=01-F1:1	Halogenfree Marine-wire	Black	2,50
F1_4	=01+01-F2:3	=01-F1:3	Halogenfree Marine-wire	Black	2,50
F1_6	=01+01-F2:5	=01-F1:5	Halogenfree Marine-wire	Black	2,50
F1_6	=01+01-T1:L3	=01+01-F2:6	Halogenfree Marine-wire	Black	1,50
F2_2	=01+01-T1:L1	=01+01-F2:2	Halogenfree Marine-wire	Black	1,50
F2_4	=01+01-T1:L2	=01+01-F2:4	Halogenfree Marine-wire	Black	1,50
H1_2	=01+01-H2:2	=01-H1:2	Halogenfree Marine-wire	Blue	1,50
H2_2	=01+01-H2:2	=01+01-H3:2	Halogenfree Marine-wire	Blue	1,50
H4_2	=01+01-H4:2	=01+01-H5:2	Halogenfree Marine-wire	Blue	1,50
H5_2	=01+01-H5:2	=01-H1:2	Halogenfree Marine-wire	Blue	1,50
H6_1	=01+01-K4:A1	=01+01-H6:1	Halogenfree Marine-wire	Blue	1,50
H6_2	=01+01-H6:2	=01+01-K4:A2	Halogenfree Marine-wire	Blue	1,50
K1_22	=01+01-Q3:13	=01+01-K1:22	Halogenfree Marine-wire	Blue	1,50
K1_A2	=01+01-K1:A2	=01+01-K2:A2	Halogenfree Marine-wire	Blue	1,50
K2_22	=01+01-Q2:13	=01+01-K2:22	Halogenfree Marine-wire	Blue	1,50
Q2_1	=01+01-Q2:1	=01+01-Q3:1	Halogenfree Marine-wire	Black	2,50
Q2_2	=01+01-K1:1	=01+01-Q2:2	Halogenfree Marine-wire	Black	2,50
Q2_3	=01+01-Q3:3	=01+01-Q2:3	Halogenfree Marine-wire	Black	2,50
Q2_4	=01+01-K1:3	=01+01-Q2:4	Halogenfree Marine-wire	Black	2,50
Q2_5	=01+01-Q3:5	=01+01-Q2:5	Halogenfree Marine-wire	Black	2,50
Q2_6	=01+01-K1:5	=01+01-Q2:6	Halogenfree Marine-wire	Black	2,50
Q2_14	=01+01-K1:A1	=01+01-Q2:14	Halogenfree Marine-wire	Blue	1,50
Q3_2	=01+01-K2:1	=01+01-Q3:2	Halogenfree Marine-wire	Black	2,50
Q3_4	=01+01-K2:3	=01+01-Q3:4	Halogenfree Marine-wire	Black	2,50
Q3_6	=01+01-K2:5	=01+01-Q3:6	Halogenfree Marine-wire	Black	2,50
Q3_14	=01+01-K2:A1	=01+01-Q3:14	Halogenfree Marine-wire	Blue	1,50

Wire design.	Source	Target	Type of wire	Color	⎅

A	12.09.2006	ML	LS11 Changed
C	13.04.2007	ML	Q2 AND Q3 AUX CONTACTS
D	01.06.2007	ML	F1, F2, T1, V1, terminals

VACON
DRIVEN BY DRIVES

Project	HXM120
Customer	
Cust. ref.	

Title
Wire list

Prepared	lebeima	04.07.2014
Checked	-	

Vacon

DCC
Based on

Proj. nr	Doc. nr	Revision
HXM120L	VL39-5035	L

Object	= 01
Loc.	+ 01
Sheet	8
Cont.	9

=01+01-X1

External target			Color	Wire design.	⌀	Strip	Term	Color	Wire design.	⌀	Internal target	
2	1										1	2
=01+01/10-3B	=01+01-V1:A		Blue			1					=01-LS11:1	
=01+01/10-6B	=01-PT11:1		1b		0,50	2						
						4						
=01+01/10-4A	=01-LS11:2		Blue			5						
=01+01/10-8E	=01-FV11:+		2rd			6		Blue			=01+01-T1:+	
=01+01/10-4A	=01-LS11:5		Blue			7					=01+01-S2:14	
=01+01/10-4B	=01-LS11:7					8		Blue			=01+01-S2:13	
=01+01/10-6B	=01-PT11:2		1r		0,50	10		1w		0,50	=01-A11:2	
						11						
=01+01/10-4B	=01-LS11:4					12		1		1,50	=01-A11:10	
						13						
						14						
=01+01/10-4F	=01-H1:1		Blue			15		9		1,50	=01-A13:21	
						16		3		1,50	=01-A12:22	
						17		4		1,50	=01-A12:23	
						19		10		1,50	=01-A13:22	
=01+01/10-5F	=01+01-H2:1		Blue			20		11		1,50	=01-A13:23	
						21		12		1,50	=01-A13:24	
						22		13		1,50	=01-A13:25	=01+01-H6:1
=01+01/10-5F	=01+01-K3:A1	=01+01-H3:1	Blue			23		14		1,50	=01-A13:26	
=01+01/11-2B		=01+01-Q2:23	Blue			24						
						25						
=01+01/10-8E		=01-FV11:-	1bk			26		Blue			=01+01-T1:-	
=01+01/10-4A		=01-LS11:10	Blue			27		Blue		1,50	=01+01-K3:A2	
						28		2w		0,50	=01-A11:3	
=01+01/11-5E		=01+01-K1:A2	Blue			29		2b		0,50	=01-A11:5	
=01+01/10-4F		=01+01-H4:2	Blue			30		3w		0,50	=01-A11:7	
						31		5		1,50	=01-A12:25	
						32		7		1,50	=01-A12:28	
=01+01/11-5D	=01+01-H4:1	=01+01-K2:21	Blue			33		6		1,50	=01-A12:26	
=01+01/11-6D	=01+01-H5:1	=01+01-K1:21	Blue			34		8		1,50	=01-A12:29	
						35		Blue			=01+01-Q2:24	=01-A11:14
						37		Blue			=01+01-Q3:24	=01-A11:15
						38		Blue			=01-F1:14	=01-A11:8
=01+01/10-7F		=01-FV11:Y	3wh			39		4w		0,50	=01-A11:18	
=01+01/10-7F		=01-FV11:U	5og			40						

WHEN CROSS-SECTION IS NOT SHOWN --> 1.5 mm²
WHEN COLOR IS NOT SHOWN --> Bk
ALL WIRES HALOGENFREE FOR MARINESOLUTIONS

A	12.09.2006	ML
C	13.04.2007	ML
D	01.06.2007	ML

LS11 Changed
Q2 AND Q3 AUX CONTACTS
F1, F2, T1, V1, terminals

VACON
DRIVEN BY DRIVES

Project	HXM120	Title	Prepared lebeima 04.07.2014	DCC	Object = 01
Customer		Terminal diagram	Checked -	Based on	Loc. + 01
Cust. ref.			Vacon	Proj. nr / Doc. nr / Revision	Sheet 9
				HXM120L / VL39-5035 / L	Cont. 10

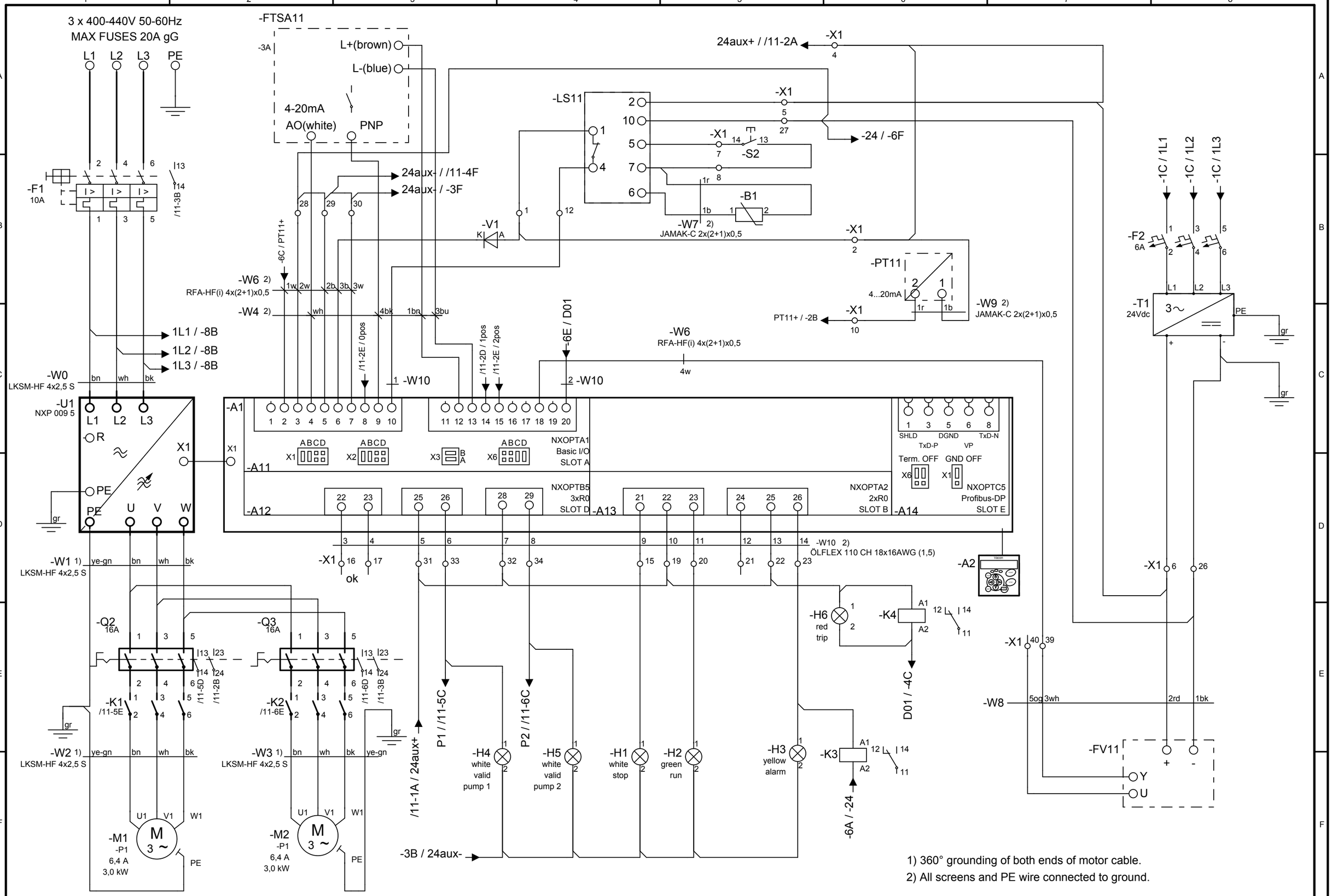

1) 360° grounding of both ends of motor cable.
2) All screens and PE wire connected to ground.

A	LS11 Changed	ML	12.09.2006				
C	Q2 AND Q3 AUX CONTACTS	ML	13.04.2007				
D	F1, F2, T1, V1, terminals	ML	01.06.2007				

VACON
DRIVEN BY DRIVES

Project	HXM120	Title	HXM120	Prepared	lebeima	10.07.2014	
Customer				Checked	-	12.06.2002	
Cust. ref.				Vacon			

DCC	&EFF	Object	= 01
Based on		Loc.	+ 01
Proj. nr	Doc. nr	Revision	Sheet 10
HXM120L	VL39-5035	L	Cont. 11

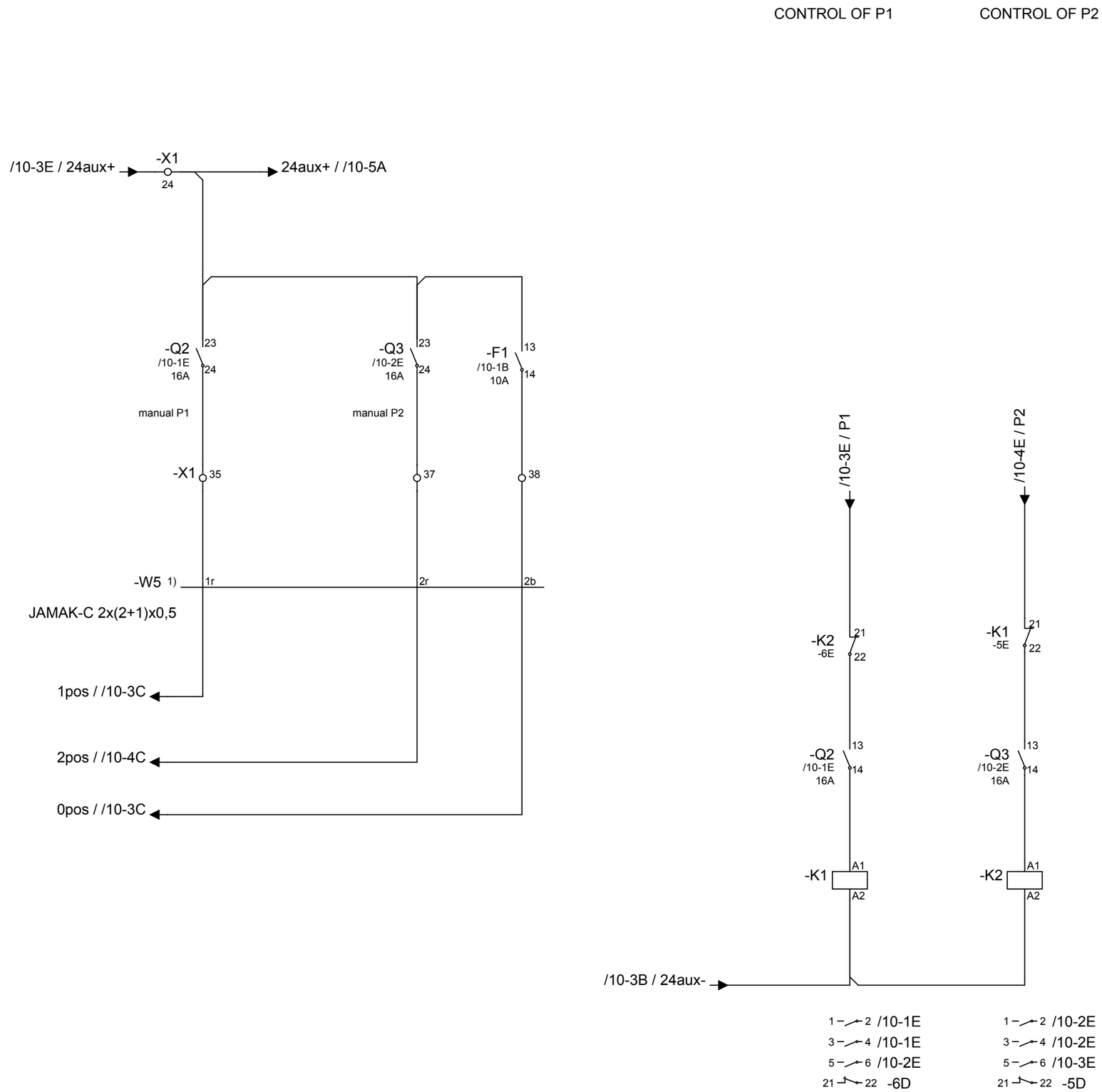

1) All screens and PE wire connected to ground.

A	LS11 Changed	ML	12.09.2006				
C	Q2 AND Q3 AUX CONTACTS	ML	13.04.2007				
D	F1, F2, T1, V1, terminals	ML	01.06.2007				

VACON DRIVEN BY DRIVES

Project	HXM120	Title	HXM120	Prepared	lebeima	03.07.2014	
Customer				Checked	-	12.06.2002	
Cust. ref.				Vacon			

DCC	&EFF		
Based on			
Proj. nr	Doc. nr	Revision	
HXM120L	VL39-5035	L	

Object	= 01
Loc.	+ 01
Sheet	11
Cont.	

VACON® NX
AC DRIVES

LIQUID-COOLED DRIVES
USER MANUAL

VACON®

Table of Contents

Document: DPD00887E
Release date : 25/10/16

1. Safety 6
1.1 Safety symbols used in the manual 6
1.2 Danger 7
1.3 Warnings 7
1.4 Grounding and earth fault protection 8
1.5 Running the motor 10
2. EU directive 11
2.1 CE marking 11
2.2 EMC directive 11
2.2.1 General 11
2.2.2 Technical criteria 11
2.2.3 VACON® AC drive EMC classification 11
2.2.4 Explanations of voltage classes 12
2.2.5 Manufacturer's declaration of conformity 13
3. Receipt of delivery 14
3.1 Type designation code 14
3.2 Storage and shipping 15
3.3 Maintenance 15
3.4 Warranty 18
4. Technical data 19
4.1 Introduction 19
4.2 Power ratings 22
4.2.1 AC drives 22
4.2.2 Inverter units 28
4.3 Technical data 31
5. Installation 36
5.1 Mounting 36
5.1.1 Lifting the drive 36
5.1.2 VACON® NX Liquid-Cooled dimensions 38
5.2 Cooling 53
5.2.1 Condensation 60
5.2.2 Cooling system connections 61
5.3 Drive derating 67
5.4 Input chokes 69
5.4.1 Installation of input chokes 70
6. Electrical cabling and connections 74
6.1 Power unit 74
6.1.1 Power connections 74
6.1.2 Drive protection – Fuses 81
6.1.3 Fuse sizes 81
6.1.4 Cable installation instructions 87
6.1.5 Supply busbars for inverter units 90
6.1.6 Installation space 91
6.1.7 Grounding of power unit 91
6.1.8 Installation of ferrite rings (option) on the motor cable 92
6.1.9 Cable installation and the UL standards 92
6.1.10 Cable and motor insulation checks 93
6.2 Control unit 94
6.2.1 Control board power-up 96
6.2.2 Control connections 96

6.2.3 Control terminal signals 98
6.2.4 Control unit mounting box 103
6.3 Internal connections 106
6.3.1 Connections between Power Unit ASIC and Driver Boards 106
6.3.2 Connections between power unit ASIC and the control unit 109
6.3.3 Connections between mains device and inverter power module 113
7. Control keypad 116
7.1 Indications on the Keypad display 116
7.1.1 Drive status indications 116
7.1.2 Control place indications 117
7.1.3 Status LEDs (green – green – red) 117
7.1.4 Text lines 117
7.2 Keypad push-buttons 118
7.2.1 Button descriptions 118
7.3 Navigation on the control keypad 119
7.3.1 Monitoring menu (M1) 120
7.3.2 Parameter menu (M2) 122
7.3.3 Keypad control menu (M3) 123
7.3.4 Active faults menu (M4) 125
7.3.5 Fault history menu (M5) 127
7.3.6 System menu (M6) 128
7.3.7 Expander board menu (M7) 141
7.4 Further keypad functions 142
8. Commissioning 143
8.1 Safety 143
8.2 Commissioning of the AC drive 144
9. Fault tracing 146
9.1 Fault codes 146
9.2 Load test with motor 152
9.3 DC link test (without motor) 153
10. Active front end (NXA) 154
10.1 Introduction 154
10.2 Diagrams 154
10.2.1 Active Front End Unit block diagram 154
10.3 Type designation code 155
10.4 Active Front End unit technical data 156
10.5 Power ratings 160
10.6 Liquid-Cooled RLC filters 162
10.6.1 Introduction 162
10.6.2 Wiring diagrams 162
10.6.3 Power rating and dimensions 163
10.6.4 Technical data 165
10.6.5 Removing discharging resistors 165
10.6.6 Removing HF capacitors 166
10.7 Active front end - fuse selection 168
10.7.1 Fuse sizes, Active Front End units (AC supply) 168
10.8 Pre-Charcing circuit 170
10.9 Parelling 172
10.10 Common pre-charging circuit 173
10.11 Each Active Front End unit has the pre-charcing circuit 174
11. Non-regenerative front end 175
11.1 Introduction 175
11.2 Diagrams 175

11.2.1 Non-regenerative Front End Unit wiring diagrams 175
11.3 Installation of the NFE control cables 178
11.4 Type designation codes 179
11.5 Power ratings 180
11.6 Non-regenerative Front End unit technical data 181
11.7 Dimensions 183
11.8 Chokes 184
11.9 Non-regenerative front end - fuse selection 185
11.9.1 Fuse sizes, Non-regenerative Front End units 186
11.9.2 Circuit breaker settings, Non-regenerative Front End units 186
11.10 Settings 186
11.10.1 Phase monitor settings 186
11.10.2 Option board settings 187
11.11 DC pre-charging circuit 188
11.12 Paralleling 189
11.13 Parameters 190
11.14 CH60 Liquid-cooled NFE protections 195
11.15 Fault codes 196
12. Brake chopper unit (NXB) 199
12.1 Introduction 199
12.2 Type designation code 199
12.3 Diagrams 199
12.3.1 NXB Brake Chopper Unit block diagram 199
12.3.2 VACON® NXB topologies and connection 200
12.4 Brake chopper unit technical data 201
12.5 BCU power ratings 204
12.5.1 VACON® NXB; DC voltage 460–800 V 204
12.5.2 VACON® NXB; DC voltage 640–1100 V 205
12.6 VACON® brake resistors and brake chopper dimensioning 206
12.6.1 Braking energy and losses 206
12.6.2 Braking power and resistance, mains voltage 380–500 Vac/600–800 Vdc 208
12.6.3 Braking power and resistance, mains voltage 525–690 Vac/840–1100 Vdc 210
12.7 Brake chopper unit – Fuse selection 212
13. Appendices 214

AT LEAST THE FOLLOWING STEPS OF THE START-UP QUICK GUIDE MUST BE PERFORMED DURING THE INSTALLATION AND COMMISSIONING.

IF ANY PROBLEMS OCCUR, CONTACT YOUR LOCAL DISTRIBUTOR.

Start-up Quick Guide

1. Check that the delivery corresponds to your order, see Chapter 3.
2. Before taking any commissioning actions read carefully the safety instructions in Chapter 1.
3. Check the size of the motor cable, mains cable, mains fuses and check the cable connections, read Chapter 6.1.1.1 – Chapter 6.1.2.
4. Follow the installation instructions.
5. Control connections are explained in Chapter 6.2.2.
6. Ensure the adequate pressure and flow of the cooling agent you are using. See Chapter 5.2.
7. If the Start-Up wizard is active, select the language of the keypad and the application you want to use and confirm by pressing the Enter button. If the Start-Up wizard is not active, follow the instructions 7a and 7b.

7a. Select the language of the keypad from the Menu M6, S6.1. Instructions on using the keypad are given in Chapter 7.

7b. Select the application you want to use from the Menu M6, S6.2. Instructions on using the keypad are given in Chapter 7.

8. All parameters have factory default values. In order to ensure proper operation, check the rating plate data for the values below and the corresponding parameters of parameter group G2.1.
   - nominal voltage of the motor
   - nominal frequency of the motor
   - nominal speed of the motor
   - nominal current of the motor
   - motor cosφ

   All parameters are explained in VACON® NX All in One Application Manual.

9. Follow the commissioning instructions, see Chapter 8.
10. The VACON® NX Liquid-Cooled AC drive is now ready for use.

Vacon Ltd is not responsible for the use of its products against instructions.

ABOUT THE VACON® NX LIQUID-COOLED AC DRIVES USER MANUAL

Congratulations for choosing the Smooth Control provided by VACON® NX_W Liquid-Cooled drives!

This manual will provide you with the necessary information about the installation, commissioning and operation of VACON® NX Liquid-Cooled drives. We recommend that you carefully study these instructions before powering up the AC drive for the first time.

This manual is available in both paper and electronic editions. We recommend you to use the electronic version if possible. If you have the electronic version at your disposal you will be able to benefit from the following features:

The manual contains several links and cross-references to other locations in the manual which makes it easier for the reader to move around in the manual, to check and find things faster.

The manual also contains hyperlinks to web pages. To visit these web pages through the links you must have an internet browser installed on your computer.

1. SAFETY



ONLY A COMPETENT ELECTRICIAN MAY CARRY OUT THE ELECTRICAL INSTALLATION!

1.1 SAFETY SYMBOLS USED IN THE MANUAL

This manual contains warnings and cautions, which are identified with safety symbols. The warnings and cautions give important information on how to prevent injury and damage to the equipment or your system.

Read the warnings and cautions carefully and obey their instructions.

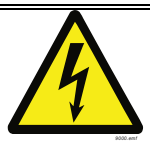	**= DANGEROUS VOLTAGE!**
	**= GENERAL WARNING!**

1.2 DANGER



Do not touch the components of the power unit when the drive is connected to mains. The components are live when the drive is connected to mains. A contact with this voltage is very dangerous.



Do not touch the motor cable terminals U, V, W, the brake resistor terminals or the DC terminals when the drive is connected to mains. These terminals are live when the drive is connected to mains, also when the motor does not operate.



Do not touch the control terminals. They can have a dangerous voltage also when the drive is disconnected from mains.



Before you do electrical work on the drive, disconnect the drive from the mains and make sure that the motor has stopped. Lock out and tag out the power source to the drive. Make sure that no external source generates unintended voltage during work. Note that also the load side of the drive can generate voltage.

Wait 5 minutes before you open the cabinet door. Use a measuring device to make sure that there is no voltage. The terminal connections and the components of the drive can be live 5 minutes after it is disconnected from the mains and the motor has stopped.



Before you connect the AC drive to mains, make sure that the coolant circulation functions properly, and check the circulation for possible leaks.



Before you connect the drive to mains, make sure that the front cover and the cable cover of the drive are closed. The connections of the AC drive are live when the drive is connected to mains.



Before connecting the drive to mains make sure that the enclosure door is closed.



Disconnect the motor from the drive if an accidental start can be dangerous. When there is a power-up, a power break or a fault reset, the motor starts immediately if the start signal is active, unless the pulse control for Start/Stop logic is selected. If the parameters, the applications or the software change, the I/O functions (including the start inputs) can change.



Wear protective gloves when you do mounting, cabling or maintenance operations. There can be sharp edges in the AC drive that can cause cuts.

1.3 WARNINGS



Do not move the AC drive. Use a fixed installation to prevent damage to the drive.



Do not make measurements when the AC drive is connected to mains. It can cause damage to the drive.



Make sure that there is reinforced protective ground connection. It is mandatory, because the touch current of the AC drives is more than 3.5 mA AC (refer to EN 61800-5-1). See Chapter 1.4.



Do not use spare parts that are not from the manufacturer. Using other spare parts can cause damage to the drive.



Before you make measurements on the motor or the motor cable, disconnect the motor cable from the AC drive.



Do not lift the AC drive from the plastic handles with an elevating device, such as jib crane or hoist.



Do not touch the components on the circuit boards. Static voltage can cause damage to these components.



Make sure that the EMC level of the AC drive is correct for your mains. Contact your local distributor for instructions. An incorrect EMC level can cause damage to the drive.



Prevent radio interference. The AC drive can cause radio interference in a domestic environment.

NOTE! If you activate the autoreset function, the motor starts automatically after an automatic fault reset. See the Application Manual.

NOTE! If you use the AC drive as a part of a machine, the machine manufacturer must supply a mains disconnection device (refer to EN 60204-1).

1.4 GROUNDING AND EARTH FAULT PROTECTION



The AC drive must always be grounded with a grounding conductor that is connected to the grounding terminal that is identified with the symbol ⏚. Not using a grounding conductor can cause damage to the drive.

The touch current of the drive is more than 3.5 mA AC. The standard EN 61800-5-1 tells that 1 or more of these conditions for the protective circuit must be true.

The connection must be fixed.

a) The protective grounding conductor must have a cross-sectional area of minimum 10 mm^2 Cu or 16 mm^2 Al. OR
b) There must be an automatic disconnection of the mains, if the protective grounding conductor breaks. See Chapter 6. OR
c) There must be a terminal for a second protective grounding conductor in the same cross-sectional area as the first protective grounding conductor.

Table 1. Protective grounding conductor cross-section

Cross-sectional area of the phase conductors (S) [mm^2]	The minimum cross-sectional area of the protective grounding conductor in question [mm^2]
$S \leq 16$	S
$16 < S \leq 35$	16
$35 < S$	S/2

The values of the table are valid only if the protective grounding conductor is made of the same metal as the phase conductors. If this is not so, the cross-sectional area of the protective grounding conductor must be determined in a manner that produces a conductance equivalent to that which results from the application of this table.

The cross-sectional area of each protective grounding conductor that is not a part of the mains cable or the cable enclosure, must be a minimum of:

- 2.5 mm^2 if there is mechanical protection, and
- 4 mm^2 if there is not mechanical protection. If you have cord-connected equipment, make sure that the protective grounding conductor in the cord is the last conductor to be interrupted, if the strain-relief mechanism breaks.

Obey the local regulations on the minimum size of the protective grounding conductor.

NOTE! Because there are high capacitive currents in the AC drive, it is possible that the fault current protective switches do not operate correctly.



If you use a fault protection relay, it must be of at least type B, preferably B+ (according to EN 50178), with a trip level of 300 mA. This is for fire protection, not for touch protection in grounded systems.

The earth fault protection inside the AC drive protects only the AC drive itself against earth faults in the motor or the motor cable. It is not intended for personal safety.



Do not do voltage withstand tests on the AC drive. The manufacturer has already done the tests. Doing voltage withstand tests can cause damage to the drive.

1.5 RUNNING THE MOTOR

Motor run check list



Before you start the motor, check that it is mounted properly and make sure that the machine connected to the motor allows the motor to be started.



Set the maximum motor speed (frequency) on the AC drive according to the motor and the machine connected to it.



Before reversing the motor make sure that this can be done safely.



Make sure that no power correction capacitors are connected to the motor cable.



Make sure that the motor terminals are not connected to mains potential.



Before you use the VACON® NX Liquid-Cooled AC drive to control the motor, make sure that liquid-cooling system functions properly.

NOTE! You can download the English and French product manuals with applicable safety, warning and caution information from http://drives.danfoss.com/knowledge-center/technical-documentation/.

REMARQUE Vous pouvez télécharger les versions anglaise et française des manuels produit contenant l'ensemble des informations de sécurité, avertissements et mises en garde applicables sur le site http://drives.danfoss.com/knowledge-center/technical-documentation/ .

2. EU DIRECTIVE

2.1 CE MARKING

The CE marking on the product guarantees the free movement of the product within the EEA (European Economic Area).

VACON® NX AC drives carry the CE label as a proof of compliance with the Low Voltage Directive and the Electro Magnetic Compatibility Directive (EMC). The company SGS FIMKO has acted as the Competent Body.

2.2 EMC DIRECTIVE

2.2.1 General

The EMC Directive provides that the electrical apparatus must not excessively disturb the environment it is used in, and, on the other hand, it must have an adequate level of immunity toward other disturbances from the same environment.

The compliance of VACON® NX Liquid-Cooled AC drives with the EMC directive is verified with Technical Construction Files (TCF) checked and approved by SGS FIMKO, which is a Competent Body. The Technical Construction Files are used to authenticate the conformity of VACON® AC drives with the Directive because such a large-sized product family is impossible to be tested in a laboratory environment and because the combinations of installation vary greatly.

2.2.2 Technical criteria

Our basic idea was to develop a range of AC drives offering the best possible usability and cost-efficiency. EMC compliance was a major consideration from the outset of the design.

VACON® NX Liquid-Cooled AC drives are marketed throughout the world, a fact which makes the EMC requirements of customers different. As far as the immunity is concerned, all VACON® NX Liquid-Cooled AC drives are designed to fulfil even the strictest requirements.

2.2.3 VACON® AC drive EMC classification

VACON® NX Liquid-Cooled AC drive and inverter modules delivered from factory fulfil all EMC immunity requirements (standard EN 61800-3).

The basic liquid cooled modules do not have any inherent emission filtering. If filtering is needed and a certain EMC emission level is required, external RFI filters must be used.

Class N:
The VACON® NX Liquid-Cooled drives of this class do not provide EMC emission protection. This kind of drives are mounted in enclosures. External EMC filtering is usually required to fulfil the EMC emission requirements.

Class T:
The T-class AC drives have a smaller earth leakage current and are intended to be used with IT supplies only. If they are used with other supplies no EMC requirements are complied with.

Warning: This is a product of the restricted sales distribution class according to IEC 61800-3. In a domestic environment this product may cause radio interference in which case the user may be required to take adequate measures.

2.2.4 Explanations of voltage classes

NX_5 = 380 - 500 VAC drives -> DC link voltage = 465 - 800 VDC

NX_6 = 525 - 690 VAC drives -> DC link voltage = 640 - 1100 VDC

NX_8 = 525 - 690 VAC drives -> DC link voltage = 640 - 1200 VDC

2.2.4.1 IT networks

The grounding of input capacitors made by default with the grounding screw at terminal X41 of the bus board in all drives is imperative in all variations of TN/TT networks. Should a drive originally purchased for TN/TT networks be used in an IT network, the screw at X41 must be removed. It is strongly recommended that this be done by Danfoss personnel. Ask you local distributor for more information.

Local contacts: http://drives.danfoss.com/danfoss-drives/local-contacts/

2.2.5 MANUFACTURER'S DECLARATION OF CONFORMITY

The following pages present the Manufacturer's Declarations of Conformity assuring the compliance of VACON® AC drives with the EMC-directives.

Danfoss A/S
DK-6430 Nordborg
Denmark
CVR nr.: 20 16 57 15

Telephone: +45 7488 2222
Fax: +45 7449 0949

EU DECLARATION OF CONFORMITY

Danfoss A/S
Vacon Ltd

declares under our sole responsibility that the

Product(s) VACON® NX Liquid-Cooled AC drive

Type(s)
VACON® NXP 0016 5… to 4140 5
VACON® NXP 0170 6… to 3100 6
VACON® NXP 0170 8… to 3100 8
VACON® NXA 0016 5… to 4140 5
VACON® NXA 0170 6… to 3100 6
VACON® NXA 0170 8… to 3100 8
VACON® NXB 0016 5… to 4140 5
VACON® NXB 0170 6… to 3100 6
VACON® NXB 0170 8… to 3100 8
VACON® NXN 2000 6

Covered by this declaration is in conformity with the following directive(s), standard(s) or other normative document(s), provided that the product is used in accordance with our instructions.

Safety: EN 61800-5-1:2007
EN 60204-1:2006+A1:2009 (as relevant)
EMC: EN 61800-3:2004+A1:2012 (only immunity)

and conforms to the relevant safety provisions of Low Voltage Directive 2006/95/EC (until April 19th, 2016), 2014/35/EU (from April 20th, 2016) and EMC Directive 2004/108/EC (until April 19th, 2016), 2014/30/EU (from April 20th, 2016).

The year the CE marking was affixed: 2002

Date	Issued by	Date	Approved by
15-04-2016	Signature Name: **Kimmo Syvänen** Title: **Director, Premium Drives**	15-04-2016	Signature Name: **Timo Kasi** Title: **VP, Design Center Finland and Italy**

Danfoss only vouches for the correctness of the English version of this declaration. In the event of the declaration being translated into any other language, the translator concerned shall be liable for the correctness of the translation

ID No: DPD01847 **Revision No: A** **Page 1 of 1**

3. RECEIPT OF DELIVERY

The standard delivery of VACON® NX Liquid-Cooled AC drives includes all or part of the following components:

- Power unit
- Control unit
- Main line connecting hoses and conduits (1.5 m) + aluminium adapters for Ch5-Ch74
- Tema 1300 series fast connectors for Ch3-Ch4
- Choke (not DC-fed inverters, type code I)
- Control unit mounting kit
- Optic fibre & cable set (1.5 m) for control unit; Optic sets in different lengths also available
- Optic fibre cable set for 2*CH64/CH74: 1.8 m/11 fibres (Power module 1) and 3.8 m/8 fibres (Power module 2)

VACON® NX Liquid-Cooled AC drives have undergone scrupulous tests and quality checks at the factory before they are delivered to the customer. However, after unpacking the product, check that no signs of transport damages are to be found on the product and that the delivery is complete (compare the type designation of the product to the code).

Should the drive have been damaged during the shipping, contact primarily the cargo insurance company or the carrier.

If the delivery does not correspond to your order, contact the supplier immediately.

3.1 TYPE DESIGNATION CODE

The type designation code for the VACON® NX Liquid-Cooled drives is presented below.

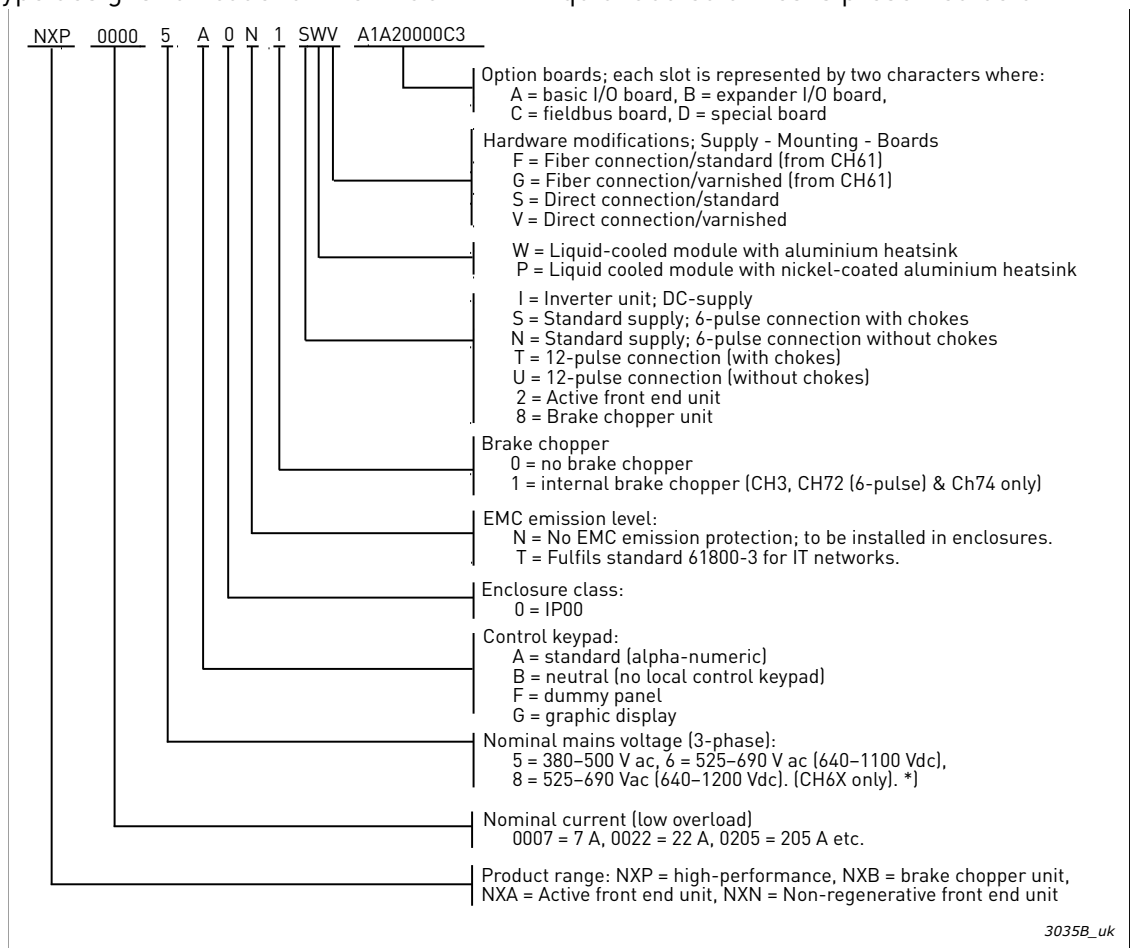

*) Note, the control unit of NX_8 (voltage class 8) drives need to be supplied with a external 24 Vdc power source.

3.2 STORAGE AND SHIPPING

If the AC drive is to be kept in store before use make sure that the ambient conditions are acceptable:

Storing temperature –40...+70 °C (no cooling liquid inside cooling element allowed below 0 °C

Relative humidity <96%, no condensation

If the storage time exceeds 12 months the electrolytic DC capacitors need to be charged with caution. Therefore, such a long storage time is not recommended. See Chapter 9.3 and the VACON® NX Liquid-Cooled Drives Service Manual for instructions on charging. See also Chapter 3.3.

Warning: Always remove all cooling agent from the cooling element(s) before shipping to avoid damage caused by freezing.

3.3 MAINTENANCE

In case the AC drive is used in conditions with temperatures below the freezing point and the liquid used for cooling is likely to freeze, be sure to empty the cooling element if the AC drive must be moved or if it is taken out of use for a longer time. See also Chapter 3.2.

It may also be necessary to clean up the coolant ducts in the cooling element. Contact the factory for more information.

The instructions for the cooling system provided by its manufacturer must be followed.

NOTE! The content of the maintenance and intervals may vary depending on ambient conditions, assembly and application.

Table 2. VACON® NX Liquid-Cooled AC drive maintenance program, general

Inspection target	Inspection intervals	Service schedule	Proactive maintenance actions
Conditions of installation environment	1 year	1 year	Check that installation and environment conditions are within manufacturer's specification, in respect, for example, heat, dust, moisture, vibration. Take corrective actions based on findings.
Cleaning	1 year	1 year	If needed, clean the product with an antistatic vacuum cleaner.
Cleanliness of cooling tunnel	1 year	1 year	Check/evaluate the cleanliness of the cooling tunnel for air cooled drives. Cleaning if necessary.
Air filters	3 months	• 3 months in demanding environment • 1 year in typical environment	**NOTE!** VACON® NX Liquid-Cooled AC drives do not include air filter. They may be included in the enclosure solution. The inspection and replacement intervals of filters depend on the environment. Replace at least once a year.
Sealings	1 year	Based on inspection	Check the sealings for IP21 or IP54 AC drives. Check visually the cable bushing. Take corrective actions based on findings.

Table 2. VACON® NX Liquid-Cooled AC drive maintenance program, general

Inspection target	Inspection intervals	Service schedule	Proactive maintenance actions
Main DC cooling fans and and internal cooling fans for electronics	1 year	5 year	Replace parts according to service schedule or based on maintenance report recommendation.
DC-link capacitors	1 year	• 8 years in demanding environment or heavy load • 12 years in typical environment or normal load	The expected life time of the capacitor is determined based on load and the temperature of the environment. Replace parts according to service schedule.
Product upgrades	1 year	1 year	Manufacturer offers product upgrades.
Printed circuit boards	1 year	12 years in typical environment	The printed circuit boards to be checked for contamination and possible corrosion. In case of contamination or corrosion printed circuit boards to be changed.
Recommended reforming interval for electrolytic DC-link capacitors (spare parts and products in storage)	1 year	1 year	Reforming must be done once a year for products and spare part capacitors in storage. Ask instructions from your local distributor.

Table 3. VACON® Liquid-Cooled AC drive maintenance program, liquid cooling system

Inspection target	Inspection intervals	Service schedule	Proactive maintenance actions
Coolant inhibitor	1 year	2 years	Add inhibitor according to instructions or analyze the coolant and add inhibitor based on result.
Coolant	2 years	6 years	Check and change coolant according to service schedule.
VACON® NX Liquid-Cooled drive coolant flow	1 year	Based on inspection	Check pressure, flow and temperature of the system. Compare to previous measurement. Temperature alarm or trip indicates that AC drive warms up and the flow is to low. Cleaning of heatsink if necessary, Ask instructions from your local distributor.

Table 3. VACON® Liquid-Cooled AC drive maintenance program, liquid cooling system

Inspection target	Inspection intervals	Service schedule	Proactive maintenance actions
Coolant leakage	3 months	Based on inspection	Open the cubicle doors and check that there are no visible leaks on cooling unit or coolant manifold connections. If you find a leak, shut down the unit and repair the leak.

Table 4. VACON® Liquid-Cooled AC drive maintenance program, cabinet, cabling and connections

Inspection target	Inspection intervals	Service schedule	Proactive maintenance actions
Cabinet, auxiliary devices (contactors, switches, relays, push buttons, indicators, etc.)	1 year	According to manufacturer information	Replace parts according to service schedule or based on maintenance report recommendation.
Sealings	1 year	Based on inspection	Check cabinet and drive sealings. Check visually cable bushing. Corrective actions based on findings.
Visual inspection of cablings	1 year	1 year	Visual inspection for possible damages and so on, due to, for example, vibration. Actions based on inspection.
Tightness of connections	1 year	1 year	Check and tighten the cable and wire connections.
Radiator cooling fans and control compartment fans	1 year	5 years	Check the operation of the fans and measure the radiator fan capacitor every 2 years. Replace parts according to service schedule or based on maintenance report recommendation.

3.4 WARRANTY

Only manufacturing defects are covered by the warranty. The manufacturer assumes no responsibility for damages caused during or resulting from transport, receipt of the delivery, installation, commissioning or use.

The manufacturer shall in no event and under no circumstances be held responsible for damages and failures resulting from misuse, wrong installation, unacceptable ambient temperature, running motor with lower coolant flow than minimum flow, condensation, dust, corrosive substances or operation outside the rated specifications.

Neither can the manufacturer be held responsible for consequential damages.

NOTE! VACON® NX Liquid-Cooled drives must not be run with the liquid cooling system disconnected. Furthermore, the requirements of the liquid cooling specifications, e.g. minimum flow rate (see Chapter 5.2 and Table 15) must be satisfied. Ignoring this will render the warranty null and void.

NOTE! VACON® Liquid-Cooled NX_8 inverter unit must be equipped with a du/dt- or sine-filter. The warranty is void in case filter are not used with these units.

The Manufacturer's time of warranty, if not otherwise agreed, is 18 months from the delivery or 12 months from the commissioning whichever expires first.

The local distributor may grant a warranty time different from the above. This warranty time shall be specified in the distributor's sales and warranty terms. Vacon Ltd assumes no responsibility for any other warranties than that granted by Vacon itself.

In all matters concerning the warranty, contact first your distributor.

4. TECHNICAL DATA

4.1 INTRODUCTION

The VACON® NX_W Liquid-Cooled product range consists of active front ends, inverters, brake choppers and AC drives. Figure 1 & Figure 2 presents the block diagram of the VACON® NX Liquid-Cooled inverter and AC drive. Mechanically, the product consists of two units, the Power Unit and the Control Unit. The power unit can contain one to six modules (cooling plates), depending on the drive size. Instead of air, VACON® NX Liquid-Cooled inverters and AC drives use liquid for cooling. A charging circuit is embodied in the AC drives but not in active front ends, inverters or brake choppers.

An external three-phase AC-choke (1) at the mains input together with the DC-link capacitor (2) form an LC-filter. In AC drives, the LC-filter together with the diode bridge produce the DC-voltage supply to the IGBT Inverter Bridge (3) block. The AC-choke also functions as a filter against High Frequency disturbances from the mains as well as against those caused by the AC drive to the mains. In addition, it enhances the waveform of the input current to the AC drive. In chasses with multiple parallel line-rectifiers (CH74) AC-chokes are required to balance the line current between the rectifiers.

The power drawn by the AC drive from the mains is mostly active power.

The IGBT Inverter Bridge produces a symmetrical, 3-phase Pulse Width Modulated AC-voltage to the motor.

The Motor and Application Control Block is based on microprocessor software. The microprocessor controls the motor basing on the information it receives through measurements, parameter settings, control I/O and control keypad. The motor and application control block controls the motor control ASIC which, in turn, calculates the IGBT positions. Gate drivers amplify these signals for driving the IGBT inverter bridge.

The control keypad constitutes a link between the user and the AC drive. The control keypad is used for parameter setting, reading status data and giving control commands. It is detachable and can be operated externally and connected via a cable to the AC drive. Instead of the control keypad, a PC can also be used to control the AC drive if connected through a similar cable (±12 V).

You can have your AC drive equipped with a control I/O board which is either isolated (OPT-A8) or not isolated (OPT-A1) from the frame. Optional I/O expander boards that increase the number of inputs and outputs to be used are also available. For closer information, contact the Manufacturer or your nearest distributor.

The basic control interface and the parameters (the Basic Application) are easy to use. If a more versatile interface or parameters are required, a more suitable application can be chosen from the "All in One" Application Package. See VACON® NX All in One Application Manual for more information on the different applications.

An internal brake chopper is available as standard for chassis CH3. For Ch72 (only 6-pulse) and Ch74, it is available as internal option while in all other sizes the brake chopper is available as option and installed externally. The standard product does not include a brake resistor. It should be acquired separately.

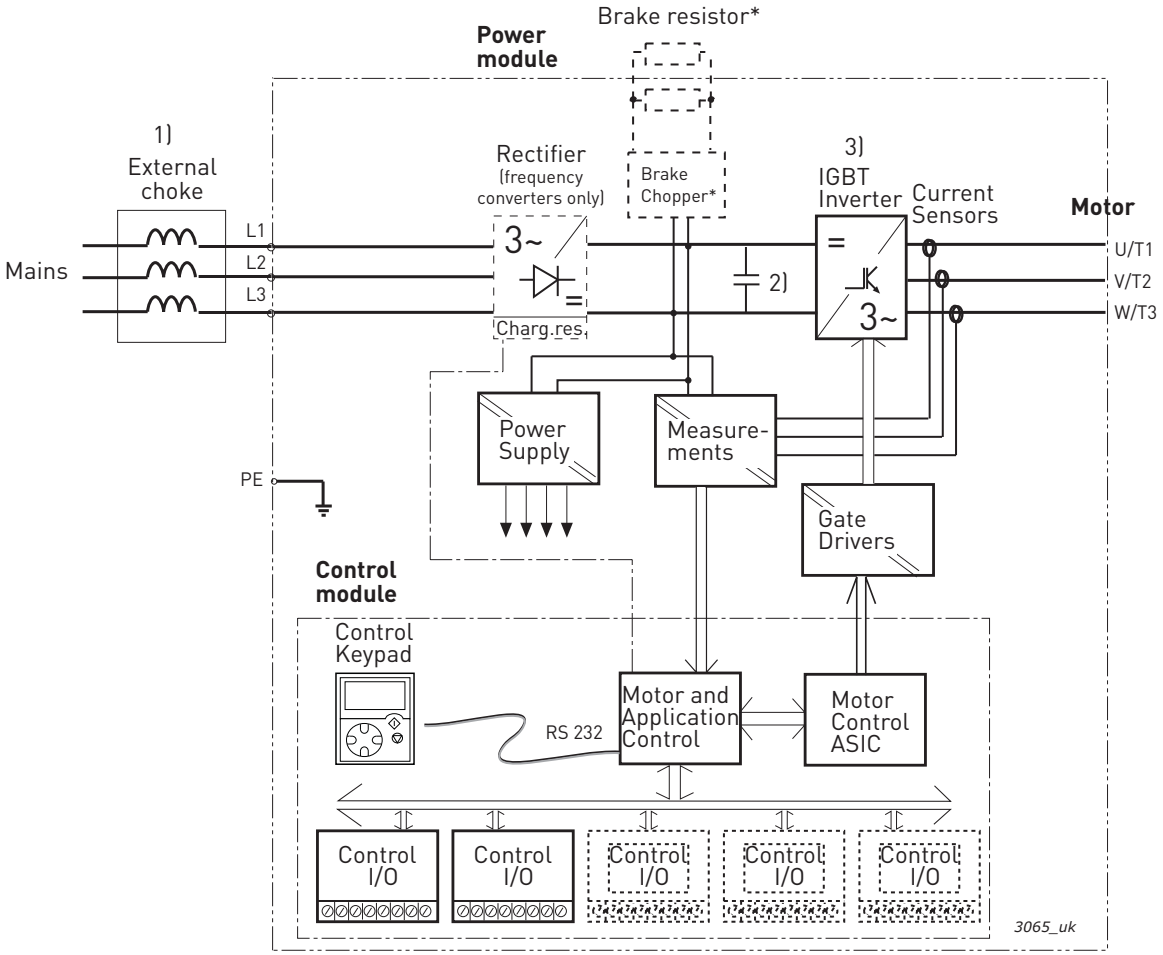

*Brake resistor is available for all sizes (CH3 to CH7). An internal brake chopper belongs to standard equipment in sizes CH3. For CH72 (only 6-pulse) and CH74, it is available as internal option while in all other sizes it is optional but installed externally.

Figure 1. VACON® NX Liquid-Cooled AC drive principal block diagram

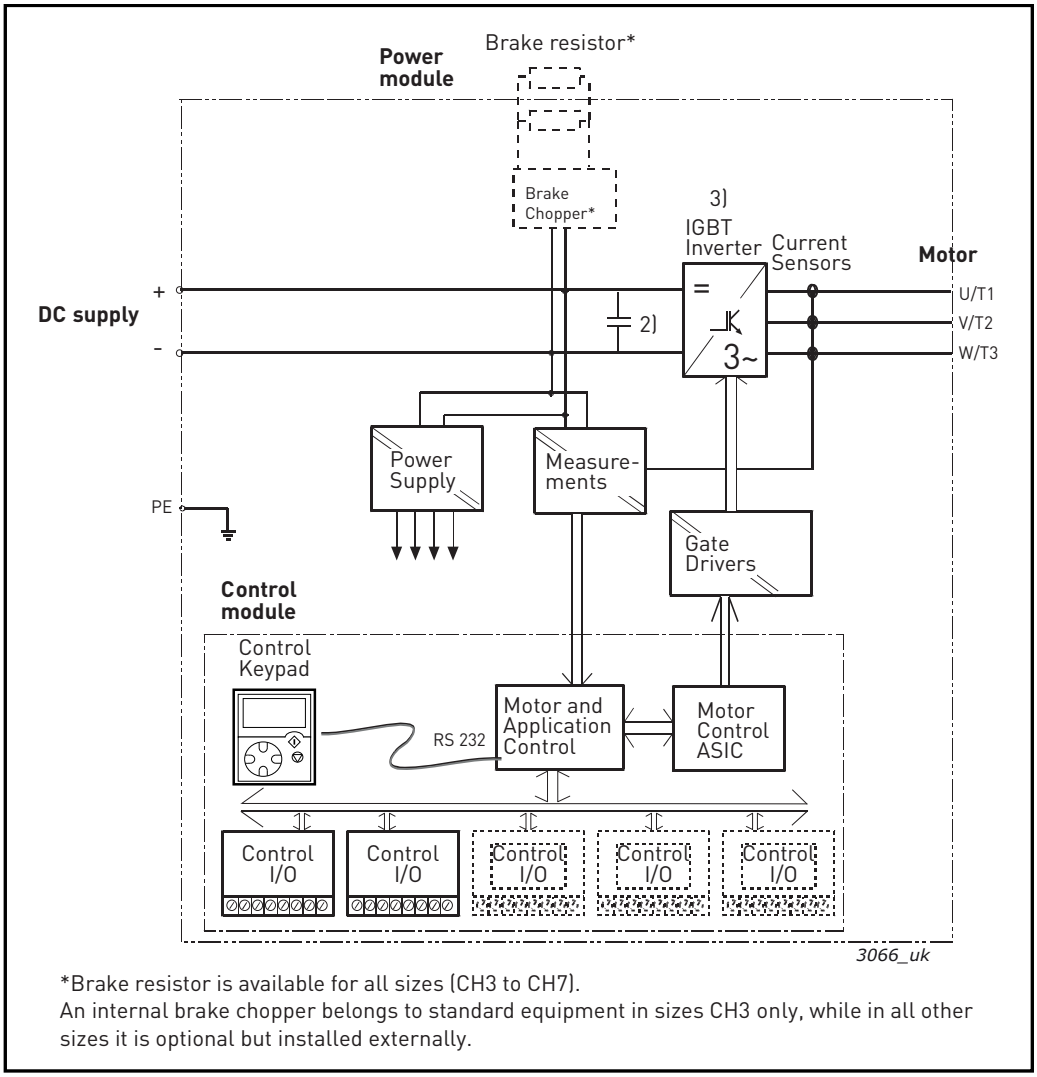

*Brake resistor is available for all sizes (CH3 to CH7).
An internal brake chopper belongs to standard equipment in sizes CH3 only, while in all other sizes it is optional but installed externally.

Figure 2. VACON® NX Liquid-Cooled inverter principal block diagram

4.2 POWER RATINGS

VACON® Liquid-Cooled product range consists of both AC drives (AC input, AC output) and inverter units (DC input, AC output). The following tables present the drive output values for both and an indication of motor shaft power at I_{th} and I_L at different mains voltages as well as the drive losses and mechanical sizes. The power achieved is given as per the supply voltage.

4.2.1 AC DRIVES

4.2.1.1 VACON® NX Liquid-Cooled AC drive – Mains voltage 400—500 VAC

Table 5. Power ratings of VACON® NX Liquid-Cooled AC drive (6-pulse), supply voltage 400-500 VAC

Mains voltage 400-500 VAC, 50/60 Hz, 3~, 6-pulse drives							
AC drive type	Drive output					Power loss c/a/T*) [kW]	Chassis
	Current			Motor output power			
	Thermal I_{th} [A]	Rated cont. I_L [A]	Rated contin. I_H [A]	Optimum motor at I_{th} (400 V) [kW]	Optimum motor at I_{th} (500 V) [kW]		
0016_5	16	15	11	7.5	11	0.4/0.2/0.6	CH3
0022_5	22	20	15	11	15	0.5/0.2/0.7	CH3
0031_5	31	28	21	15	18.5	0.7/0.2/0.9	CH3
0038_5	38	35	25	18.5	22	0.8/0.2/1.0	CH3
0045_5	45	41	30	22	30	1.0/0.3/1.3	CH3
0061_5	61	55	41	30	37	1.3/0.3/1.5	CH3
0072_5	72	65	48	37	45	1.2/0.3/1.5	CH4
0087_5	87	79	58	45	55	1.5/0.3/1.8	CH4
0105_5	105	95	70	55	75	1.8/0.3/2.1	CH4
0140_5	140	127	93	75	90	2.3/0.3/2.6	CH4
0168_5	168	153	112	90	110	4.0/0.4/4.4	CH5
0205_5	205	186	137	110	132	5.0/0.5/5.5	CH5
0261_5	261	237	174	132	160	6.0/0.5/6.5	CH5
0300_5	300	273	200	160	200	4.5/0.5/5.0	CH61
0385_5	385	350	257	200	250	6.0/0.5/6.5	CH61
0460_5	460	418	307	250	315	6.5/0.5/7.0	CH72
0520_5	520	473	347	250	355	7.5/0.6/8.1	CH72
0590_5	590	536	393	315	400	9.0/0.7/9.7	CH72
0650_5	650	591	433	355	450	10.0/0.7/10.7	CH72
0730_5	730	664	487	400	500	12.0/0.8/12.8	CH72
0820_5	820	745	547	450	560	12.5/0.8/13.3	CH63
0920_5	920	836	613	500	600	14.4/0.9/15.3	CH63
1030_5	1030	936	687	560	700	16.5/1.0/17.5	CH63
1150_5	1150	1045	766	600	750	18.5/1.2/19.7	CH63
1370_5	1370	1245	913	700	900	19.0/1.2/20.2	CH74
1640_5	1640	1491	1093	900	1100	24.0/1.4/25.4	CH74
2060_5	2060	1873	1373	1100	1400	32.5/1.8/34.3	CH74
2300_5	2300	2091	1533	1250	1500	36.3/2.0/38.3	CH74

Table 5. Power ratings of VACON® NX Liquid-Cooled AC drive (6-pulse), supply voltage 400-500 VAC

Mains voltage 400-500 VAC, 50/60 Hz, 3~, 6-pulse drives							
2470_5	2470	2245	1647	1300	1600	38.8/2.2/41.0	2*CH74
2950_5	2950	2681	1967	1550	1950	46.3/2.6/48.9	2*CH74
3710_5	3710	3372	2473	1950	2450	58.2/3.0/61.2	2*CH74
4140_5	4140	3763	2760	2150	2700	65.0/3.6/68.6	2*CH74

Table 6. Power ratings of VACON® NX Liquid-Cooled AC drive (12-pulse), supply voltage 400-500 VAC

Mains voltage 400-500 VAC, 50/60 Hz, 3~, 12-pulse drives							
AC drive type	Drive output					Power loss c/a/T*) [kW]	Chassis
	Current			Motor output power			
	Thermal I_{th} [A]	Rated cont. I_L [A]	Rated contin. I_H [A]	Optimum motor at I_{th} (400 V) [kW]	Optimum motor at I_{th} (500 V) [kW]		
0460_5	460	418	307	250	315	6.5/0.5/7.0	CH72
0520_5	520	473	347	250	355	7.5/0.6/8.1	CH72
0590_5	590	536	393	315	400	9.0/0.7/9.7	CH72
0650_5	650	591	433	355	400	10.0/0.7/10.7	CH72
0730_5	730	664	487	400	450	12.0/0.8/12.8	CH72
1370_5	1370	1245	913	700	900	19.0/1.2/20.2	CH74
1640_5	1640	1491	1093	850	1050	24.0/1.4/25.4	CH74
2060_5	2060	1873	1373	1050	1350	32.5/1.8/34.3	CH74
2470_5	2470	2245	1647	1300	1600	38.8/2.2/41.0	2*CH74
2950_5	2950	2681	1967	1550	1950	46.3/2.6/48.9	2*CH74
3710_5	3710	3372	2473	1950	2450	58.2/3.0/61.2	2*CH74
4140_5	4140	3763	2760	2150	2700	65.0/3.6/68.6	2*CH74

I_{th} = Thermal maximum continuous RMS current. Dimensioning can be done according to this current if the process does not require any overloadability or the process does not include any load variation or margin for overloadability.
I_L = Low overloadability current. Allows +10% load variation. 10% exceeding can be continuous.

I_H = High overloadability current. Allows +50% load variation. 50% exceeding can be continuous.

All values with cosφ = 0.83 and efficiency = 97%.

*) c = power loss into coolant; a = power loss into air; T = total power loss; power losses of input chokes not included. All power losses obtained using max. supply voltage, I_{th} and switching frequency of 3.6 kHz and Closed Loop control mode. All power losses are worst case losses.

If some other mains voltage is used, apply the formula P = $\sqrt{3}$ x Un x In x cosφ x eff% to calculate the VACON® NX Liquid-Cooled drive output power.

The enclosure class for all VACON® NX Liquid-Cooled AC drives is IP00.

If the motor is continuously (besides start and stop ramps) run at frequencies below 5 Hz, pay attention to the drive dimensioning for low frequencies, i.e. maximum $I_H = 0.66*I_{th}$ or choose drive according to I_H. It is recommended to check the rating with your nearest distributor.

Drive overrating may also be necessary if the process requires high starting torque.

Table 7. Internal brake chopper unit (BCU) ratings, braking voltage 640—800 VDC

Internal brake chopper ratings, braking voltage 640-800 Vdc						
AC drive type	Loadability	Braking capacity at 600 Vdc		Braking capacity at 800 Vdc		Chassis
	Rated min resistance [Ω]	Rated cont. braking power [kW]	BCU rated cont. braking current, I_{br} [A]	Rated cont. braking power R at 800VDC [kW]	BCU rated cont. braking current, I_{br} [A]	
NX_460 5 [1)]	1.3	276	461	492	615	CH72
NX_520 5 [1)]	1.3	276	461	492	615	CH72
NX_590 5 [1)]	1.3	276	461	492	615	CH72
NX_650 5 [1)]	1.3	276	461	492	615	CH72
NX_730 5 [1)]	1.3	276	461	492	615	CH72
NX_1370 5	1.3	276	461	492	615	CH74
NX_1640 5	1.3	276	461	492	615	CH74
NX_2060 5	1.3	276	461	492	615	CH74
NX_2300 5	1.3	276	461	492	615	CH74

NOTE! Braking power: $P_{brake} = U_{brake}$^2 / R_{brake}

NOTE! Braking DC current: $I_{in\_max} = P_{brake\_max} / U_{brake}$

[1)] Only 6 pulse drives

The internal brake chopper can also be used in motor application where 2...4 x Ch7x drives are used for a single motor, but in this case the DC connections of the power modules must be connected together. The break choppers are working independently of each other and because of this the DC connections must be connected together otherwise there can be unbalance between the power modules.

4.2.1.2 VACON® NX Liquid-Cooled AC drive – Mains voltage 525—690 VAC

Table 8. Power ratings of VACON® NX Liquid-Cooled AC drive (6-pulse), supply voltage 525—690 VAC

Mains voltage 525-690 VAC, 50/60 Hz, 3~, 6-pulse drives							
AC drive type	Drive output					Power loss c/a/T*) [kW]	Chassis
	Current			Motor output power			
	Thermal I_{th} [A]	Rated contin. I_L [A]	Rated contin. I_H [A]	Optimum motor at I_{th} (525V) [kW]	Optimum motor at I_{th} (690V) [kW]		
0170_6	170	155	113	110	160	4.0/0.2/4.2	CH61
0208_6	208	189	139	132	200	4.8/0.3/5.1	CH61
0261_6	261	237	174	160	250	6.3/0.3/6.6	CH61
0325_6	325	295	217	200	300	7.2/0.4/7.6	CH72
0385_6	385	350	257	250	355	8.5/0.5/9.0	CH72
0416_6	416	378	277	250	355	9.1/0.5/9.6	CH72
0460_6	460	418	307	300	400	10.0/0.5/10.5	CH72
0502_6	502	456	335	355	450	11.2/0.6/11.8	CH72
0590_6	590	536	393	400	560	12.4/0.7/13.1	CH63
0650_6	650	591	433	450	600	14.2/0.8/15.0	CH63
0750_6	750	682	500	500	700	16.4/0.9/17.3	CH63
0820_6	820	745	547	560	800	17.3/1.0/18.3	CH74
0920_6	920	836	613	650	850	19.4/1.1/20.5	CH74
1030_6	1030	936	687	700	1000	21.6/1.2/22.8	CH74
1180_6	1180	1073	787	800	1100	25.0/1.3/26.3	CH74
1300_6	1300	1182	867	900	1200	27.3/1.5/28.8	CH74
1500_6	1500	1364	1000	1050	1400	32.1/1.7/33.8	CH74
1700_6	1700	1545	1133	1150	1550	36.5/1.9/38.4	CH74
1850_6	1850	1682	1233	1250	1650	39.0/2.0/41.0	2*CH74
2120_6	2120	1927	1413	1450	1900	44.9/2.4/47.3	2*CH74
2340_6	2340	2127	1560	1600	2100	49.2/2.6/51.8	2*CH74
2700_6	2700	2455	1800	1850	2450	57.7/3.1/60.8	2*CH74
3100_6	3100	2818	2066	2150	2800	65.7/3.4/69.1	2*CH74

Table 9. Power ratings of VACON® NX Liquid-Cooled AC drive (12-pulse), supply voltage 525—690 VAC

Mains voltage 525-690 VAC, 50/60 Hz, 3~, 12-pulse drives							
AC drive type	Drive output					Power loss c/a/T*) [kW]	Chassis
	Current			Motor output power			
	Thermal I_{th} [A]	Rated contin. I_L [A]	Rated contin. I_H [A]	Optimum motor at I_{th} (525V) [kW]	Optimum motor at I_{th} (690V) [kW]		
0325_6	325	295	217	200	250	7.2/0.4/7.6	CH72
0385_6	385	350	257	250	355	8.5/0.5/9.0	CH72

Table 9. Power ratings of VACON® NX Liquid-Cooled AC drive (12-pulse), supply voltage 525—690 VAC

Mains voltage 525-690 VAC, 50/60 Hz, 3~, 12-pulse drives							
0416_6	416	378	277	250	355	9.1/0.5/9.6	CH72
0460_6	460	418	307	315	400	10.0/0.5/10.5	CH72
0502_6	502	456	335	355	450	11.2/0.6/11.8	CH72
0820_6	820	745	547	600	750	17.3/1.0/18.3	CH74
0920_6	920	836	613	650	850	19.4/1.1/20.5	CH74
1030_6	1030	936	687	750	950	21.6/1.2/22.8	CH74
1180_6	1180	1073	787	800	1100	25.0/1.3/26.3	CH74
1300_6	1300	1182	867	950	1200	27.3/1.5/28.8	CH74
1500_6	1500	1364	1000	1050	1400	32.1/1.7/33.8	CH74
1700_6	1700	1545	1133	1150	1550	36.5/1.9/38.4	Ch74
1850_6	1850	1682	1233	1250	1650	39.0/2.0/41.0	2*CH74
2120_6	2120	1927	1413	1450	1900	44.9/2.4/47.3	2*CH74
2340_6	2340	2127	1560	1600	2100	49.2/2.6/51.8	2*CH74
2700_6	2700	2455	1800	1850	2450	57.7/3.1/60.8	2*CH74
3100_6	3100	2818	2067	2150	2800	65.7/3.4/69.1	2*CH74

I_{th} = Thermal maximum continuous RMS current. Dimensioning can be done according to this current if the process does not require any overloadability or the process does not include any load variation.

I_L = Low overloadability current. Allows +10% load variation. 10% exceeding can be continuous.

I_H = High overloadability current. Allows +50% load variation. 50% exceeding can be continuous.

All values with cosφ = 0.83 and efficiency = 97%.

*) c = power loss into coolant; a = power loss into air; T = total power loss; power losses of input chokes not included. All power losses obtained using max. supply voltage, I_{th} and switching frequency of 3.6 kHz and Closed Loop control mode. All power losses are worst case losses.

If some other mains voltage is used, apply the formula P = $\sqrt{3}$ x Un x In x cosφ x eff% to calculate the VACON® NX Liquid-Cooled drive output power.

The enclosure class for all VACON® NX Liquid-Cooled AC drives is IP00.

If the motor is continuously (besides start and stop ramps) run at frequencies below 5 Hz, pay attention to the drive dimensioning for low frequencies, i.e. maximum $I_H = 0.66*I_{th}$ or choose drive according to I_H. It is recommended to check the rating with your nearest distributor.

Drive overrating may also be necessary if the process requires high starting torque.

Table 10. Internal brake chopper unit (BCU) ratings, braking voltage 840—1100 VDC

Internal brake chopper ratings, braking voltage 840-1100 Vdc						
AC drive Type	Loadability	Braking capacity at 840 Vdc		Braking capacity at 1100 Vdc		Chassis
	Rated min resistance [Ω]	Rated cont. braking power [kW]	BCU rated cont. braking current, I_{br} [A]	Rated cont. braking power [kW]	BCU rated cont. braking current, I_{br} [A]	
NX_325 6 [1)]	2.8	252	300	432	392	Ch72
NX_385 6 [1)]	2.8	252	300	432	392	Ch72
NX_416 6 [1)]	2.8	252	300	432	392	Ch72

Table 10. Internal brake chopper unit (BCU) ratings, braking voltage 840—1100 VDC

Internal brake chopper ratings, braking voltage 840-1100 Vdc						
NX_460 6 [1)]	2.8	252	300	432	392	Ch72
NX_502 6 [1)]	2.8	252	300	432	392	Ch72
NX_820 6	2.8	252	300	432	392	Ch74
NX_920 6	2.8	252	300	432	392	Ch74
NX_1030 6	2.8	252	300	432	392	Ch74
NX_1180 6	2.8	252	300	432	392	Ch74
NX_1300 6	2.8	252	300	432	392	Ch74
NX_1500 6	2.8	252	300	432	392	Ch74
NX_1700 6	2.8	252	300	432	392	Ch74

NOTE! Braking power: $P_{brake} = U_{brake}^2 / R_{brake}$

NOTE! Braking DC current: $I_{in\_max} = P_{brake\_max} / U_{brake}$

[1)] Only 6 pulse drives

The internal brake chopper can also be used in motor application where 2...4 x Ch7x drives are used for a single motor, but in this case the DC connections of the power modules must be connected together. The break choppers are working independently of each other and because of this the DC connections must be connected together otherwise there can be unbalance between the power modules.

4.2.2 INVERTER UNITS

4.2.2.1 VACON® NX Liquid-Cooled Inverter Unit – Mains voltage 465—800 VDC

Table 11. Power ratings of VACON® NX Liquid-Cooled inverter unit, supply voltage 540—675 VDC

Mains voltage 465-800 VDC							
AC drive type	Drive output					Power loss c/a/T*) [kW]	Chassis
	Current			Motor output power			
	Thermal I_{th} [A]	Rated cont. I_L [A]	Rated cont. I_H [A]	Optimum motor at I_{th} (540 VDC) [kW]	Optimum motor at I_{th} (675 VDC) [kW]		
0016_5	16	15	11	7.5	11	0.4/0.2/0.6	CH3
0022_5	22	20	15	11	15	0.5/0.2/0.7	CH3
0031_5	31	28	21	15	18.5	0.7/0.2/0.9	CH3
0038_5	38	35	25	18.5	22	0.8/0.2/1.0	CH3
0045_5	45	41	30	22	30	1.0/0.3/1.3	CH3
0061_5	61	55	41	30	37	1.3/0.3/1.5	CH3
0072_5	72	65	48	37	45	1.2/0.3/1.5	CH4
0087_5	87	79	58	45	55	1.5/0.3/1.8	CH4
0105_5	105	95	70	55	75	1.8/0.3/2.1	CH4
0140_5	140	127	93	75	90	2.3/0.3/2.6	CH4
0168_5	168	153	112	90	110	2.5/0.3/2.8	CH5
0205_5	205	186	137	110	132	3.0/0.4/3.4	CH5
0261_5	261	237	174	132	160	4.0/0.4/4.4	CH5
0300_5	300	273	200	160	200	4.5/0.4/4.9	CH61
0385_5	385	350	257	200	250	5.5/0.5/6.0	CH61
0460_5	460	418	307	250	315	5.5/0.5/6.0	CH62
0520_5	520	473	347	250	355	6.5/0.5/7.0	CH62
0590_5	590	536	393	315	400	7.5/0.6/8.1	CH62
0650_5	650	591	433	355	450	8.5/0.6/9.1	CH62
0730_5	730	664	487	400	500	10.0/0.7/10.7	CH62
0820_5	820	745	547	450	560	12.5/0.8/13.3	CH63
0920_5	920	836	613	500	600	14.4/0.9/15.3	CH63
1030_5	1030	936	687	560	700	16.5/1.0/17.5	CH63
1150_5	1150	1045	766	600	750	18.4/1.1/19.5	CH63
1370_5	1370	1245	913	700	900	15.5/1.0/16.5	CH64
1640_5	1640	1491	1093	900	1100	19.5/1.2/20.7	CH64
2060_5	2060	1873	1373	1100	1400	26.5/1.5/28.0	CH64
2300_5	2300	2091	1533	1250	1500	29.6/1.7/31.3	CH64
2470_5	2470	2245	1647	1300	1600	36.0/2.0/38.0	2*CH64
2950_5	2950	2681	1967	1550	1950	39.0/2.4/41.4	2*CH64
3710_5	3710	3372	2473	1950	2450	48.0/2.7/50.7	2*CH64
4140_5	4140	3763	2760	2150	2700	53.0/3.0/56.0	2*CH64

I_{th} = Thermal maximum continuous RMS current. Dimensioning can be done according to this current if the process does not require any overloadability or the process does not include any load variation.

I_L = Low overloadability current. Allows +10% load variation. 10% exceeding can be continuous.

I_H = High overloadability current. Allows +50% load variation. 50% exceeding can be continuous.

All values with cosφ = 0.83 and efficiency = 97%.

*) c = power loss into coolant; a = power loss into air; T = total power loss.

All power losses obtained using max. supply voltage, I_{th} and switching frequency of 3.6 kHz and Closed Loop control mode. All power losses are worst case losses.

If some other mains voltage is used, apply the formula DC P = (U_{DC}/1.35)* $\sqrt{3}$ *In*cosφ*eff% to calculate the VACON® NX Liquid-Cooled drive electrical output power.

If the motor is continuously (besides start and stop ramps) run at frequencies below 5 Hz, pay attention to the drive dimensioning for low frequencies, i.e. maximum $I_H = 0.66*I_{th}$ or choose drive according to I_H. It is recommended to check the rating with your nearest distributor.

Drive overrating may also be necessary if the process requires high starting torque.

The voltage classes for the inverter units used in the tables above have been defined as follows:

Input 540 VDC = Rectified 400 VAC supply

Input 675 VDC = Rectified 500 VAC supply

The enclosure class of all inverter units is IP00.

4.2.2.2 VACON® NX Liquid-Cooled Inverter Unit – Mains voltage 640—1100 VDC

Table 12. Power ratings of VACON® NX Liquid-Cooled inverter unit, supply voltage 710—930 VDC

Mains voltage 640-1100 VDC*)							
Inverter type	Drive output					Power loss c/a/T*) [kW]	Chassis
	Current			Motor output power			
	Thermal I_{th} [A]	Rated cont. I_L [A]	Rated cont. I_H [A]	Optimum motor at I_{th} (710VDC) [kW]	Optimum motor at I_{th} (930VDC) [kW]		
0170_6	170	155	113	110	160	3.6/0.2/3.8	CH61
0208_6	208	189	139	132	200	4.3/0.3/4.6	CH61
0261_6	261	237	174	160	250	5.4/0.3/5.7	CH61
0325_6	325	295	217	200	300	6.5/0.3/6.8	CH62
0385_6	385	350	257	250	355	7.5/0.4/7.9	CH62
0416_6	416	378	277	250	355	8.0/0.4/8.4	CH62
0460_6	460	418	307	300	400	8.7/0.4/9.1	CH62
0502_6	502	456	335	355	450	9.8/0.5/10.3	CH62
0590_6	590	536	393	400	560	10.9/0.6/11.5	CH63
0650_6	650	591	433	450	600	12.4/0.7/13.1	CH63
0750_6	750	682	500	500	700	14.4/0.8/15.2	CH63
0820_6	820	745	547	560	800	15.4/0.8/16.2	CH64
0920_6	920	836	613	650	850	17.2/0.9/18.1	CH64
1030_6	1030	936	687	700	1000	19.0/1.0/20.0	CH64
1180_6	1180	1073	787	800	1100	21.0/1.1/22.1	CH64
1300_6	1300	1182	867	900	1200	24.0/1.3/25.3	CH64
1500_6	1500	1364	1000	1050	1400	28.0/1.5/29.5	CH64
1700_6	1700	1545	1133	1150	1550	32.1/1.7/33.8	CH64
1850_6	1850	1682	1233	1250	1650	34.2/1.8/36.0	2*CH64

Table 12. Power ratings of VACON® NX Liquid-Cooled inverter unit, supply voltage 710—930 VDC

Mains voltage 640-1100 VDC*)							
2120_6	2120	1927	1413	1450	1900	37.8/2.0/39.8	2*CH64
2340_6	2340	2127	1560	1600	2100	43.2/2.3/45.5	2*CH64
2700_6	2700	2455	1800	1850	2450	50.4/2.7/53.1	2*CH64
3100_6	3100	2818	2066	2150	2800	57.7/3.1/60.8	2*CH64

*) Mains voltage 640-1200 VDC for NX_8 inverter units

I_{th} = Thermal maximum continuous RMS current. Dimensioning can be done according to this current if the process does not require any overloadability or the process does not include any load variation.

I_L = Low overloadability current. Allows +10% load variation. 10% exceeding can be continuous.

I_H = High overloadability current. Allows +50% load variation. 50% exceeding can be continuous.

All values with cosφ = 0.83 and efficiency = 97%.

*) c = power loss into coolant; a = power loss into air; T = total power loss.

All power losses obtained using max. supply voltage, I_{th} and switching frequency of 3.6 kHz and Closed Loop control mode. All power losses are worst case losses.

If some other mains voltage is used, apply the formula DC P = (U_{DC}/1.35)* $\sqrt{3}$ *In*cosφ*eff% to calculate the VACON® NX Liquid-Cooled drive output power.

The voltage classes for the inverter units used in the tables above have been defined as follows:

Input 710 VDC = Rectified 525 VAC supply

Input 930 VDC = Rectified 690 VAC supply

The enclosure class of all inverter units is IP00.

If the motor is continuously (besides start and stop ramps) run at frequencies below 5 Hz, pay attention to the drive dimensioning for low frequencies, i.e. maximum $I_H = 0.66*I_{th}$ or choose drive according to I_H. It is recommended to check the rating with your nearest distributor.

Drive overrating may also be necessary if the process requires high starting torque.

Local contacts: http://drives.danfoss.com/danfoss-drives/local-contacts/

4.3 TECHNICAL DATA

) NX_8 AC drives only available as Ch6x AFE/BCU/INU units. **Note:** System software version

Table 13. Technical data

Mains connection	Input voltage U_{in}	NX_5: 400...500 VAC (–10%...+10%); 465...800 VDC (–0%...+0%) NX_6: 525...690 VAC (–10%...+10%); 640...1100 VDC (–0%...+0%) NX_8: 525...690 VAC (–10%...+10%); 640...1200 VDC (–0%...+0%)*)	
	Input frequency	45...66 Hz	
	Connection to mains	Once per minute or less	
	DC bank capacitance	Voltage class 500 V:	Ch3 (16-31A units): 410 µF Ch3 (38-61A units): 600 µF CH4: 2400 µF CH5: 7200 µF CH61: 10800 µF CH62/CH72: 10800 µF CH63: 21600 µF CH64/CH74: 32400 µF 2*CH64/2*CH74: 64800 µF
		Voltage class 690 V:	CH61: 4800 µF CH62/CH72: 4800 µF CH63: 9600 µF CH64/CH74: 14400 µF 2*CH64/2*CH74: 28800 µF
Supply network	Networks	TN, TT, IT	
	Short circuit current	Maximum short circuit current has to be < 100 kA.	
Motor connection	Output voltage	0—U_{in}	
	Continuous output current	Rated current at nominal inflow cooling water temperature according to dimensioning charts.	
	Output frequency	0...320 Hz (standard); 7200 Hz (Special software)	
	Frequency resolution	Application dependent	
	Output filter	VACON® Liquid-Cooled NX_8 unit must be equipped with a du/dt- or sine-filter.	

Table 13. Technical data

Control characteristics	Control method	Frequency control U/f Open Loop Sensorless Vector Control Closed Loop Vector Control
	Switching frequency	NX_5: Up to and including NX_0061: 1...16 kHz; Factory default 10 kHz From NX_0072: 1...12 kHz; Factory default 3.6 kHz NX_6/ NX_8: 1...6 kHz; Factory default 1.5 kHz Derating required if higher switching frequency than the default is used! **NOTE!** DriveSynch paralleling concept: Recommended minimum switching **NOTE!** frequency for open loop control 1.7 kHz and closed loop control 2.5 kHz. Maximum switching frequency 3.6 kHz.
	<u>Frequency reference</u> Analogue input Panel reference	 Resolution 0.1% (10-bit), accuracy ±1% Resolution 0.01 Hz
	Field weakening point	8...320 Hz
	Acceleration time	0.1...3000 sec
	Deceleration time	0.1...3000 sec
	Braking torque	DC brake: 30% * T_N (without brake option)

Table 13. Technical data

Ambient conditions	Ambient operating temperature	–10 °C (no frost)...+50 °C (at I_{th}) The VACON® NX Liquid-Cooled drives must be used in an heated indoor controlled environment.
	Installation temperature	0...+70 °C
	Storage temperature	–40 °C...+70 °C; No liquid in heatsink under 0 °C
	Relative humidity	5 to 96% RH, non-condensing, no dripping water
	Air quality: • chemical vapours • mechanical particles	IEC 60721-3-3, unit in operation, class 3C2 IEC 60721-3-3, unit in operation, class 3S2 (no conductive dust allowed) No corrosive gases
	Altitude	NX_5: (380...500 V): max. 3000 m (in case network is not corner grounded) NX_6/NX_8: max. 2000 m. For further requirements, contact factory 100-% load capacity (no derating) up to 1,000 m; above 1,000 m derating of maximum ambient operating temperature by 0.5 °C per each 100 m is required.
	Vibration EN 50178/EN 60068-2-6	5...150 Hz Displacement amplitude 0.25 mm (peak) at 3...31 Hz Max. acceleration amplitude 1 G at 31...150 Hz
	Shock EN 50178, EN 60068-2-27	UPS Drop Test (for applicable UPS weights) Storage and shipping: max 15 G, 11 ms (in package)
	Enclosure class	IP00/Open Frame standard in entire kW/HP range
	Pollution degree	PD2
EMC	Immunity	Fulfils IEC/EN 61800-3 EMC immunity requirements
	Emissions	EMC level N for TN/TT networks EMC level T for IT networks
Safety		IEC/EN 61800-5-1 (2007), CE, UL, cUL, GOST R, (see unit nameplate for more detailed approvals) IEC 60664-1 and UL840 in overvoltage category III.
	Safe Torque Off (STO) board	The drive is equipped with VACON® OPTAF board for prevention of torque on motor shaft. Standards: prEN ISO 13849-1 (2004), EN ISO 13849-2 (2003), EN 60079-14 (1997), EN 954-1 (1996), cat. 3 (hardware disable); IEC 61508-3(2001), prEN 50495 (2006). See VACON® NX OPTAF STO Board User Manual for detailed information.

Table 13. Technical data

Control connections (apply to boards OPT-A1, OPT-A2 and OPT-A3)	Analogue input voltage	0...+10 V, R_i = 200 kΩ, (–10 V...+10 V joystick control) Resolution 0.1%, accuracy ±1%
	Analogue input current	0(4)...20 mA, Ri = 250 W differential
	Digital inputs (6)	Positive or negative logic; 18...24 VDC
	Auxiliary voltage	+24 V, ±10%, max volt. ripple < 100 mVrms; max. 250 mA Dimensioning: max. 1000 mA/control box 1A external fuse required (no internal short-circuit protection on the control board)
	Output reference voltage	+10 V, +3%, max. load 10 mA
	Analogue output	0(4)...20 mA; R_L max. 500 Ω; Resolution 10 bit; Accuracy ±2%
	Digital outputs	Open collector output, 50 mA/48 V
	Relay outputs	2 programmable change-over relay outputs Switching capacity: 24 VDC/8 A, 250 VAC/8 A, 125 VDC/0.4 A Min. switching load: 5 V/10 mA
Protections	Overvoltage trip limit	NX_5: 911 VDC NX_6: (CH61, CH62, CH63 & CH64): 1258 VDC NX_6: (CH72 & CH74): 1200 VDC NX_8: (CH61, CH62, CH63 & CH64): 1300 VDC
	Undervoltage trip limit	NX_5: 333 VDC; NX_6: 461 VDC; NX_8: 461 VDC
	Earth fault protection	In case of earth fault in motor or motor cable, only the AC drive is protected.
	Mains supervision	Trips if any of the input phases is missing (AC drives only).
	Motor phase supervision	Trips if any of the output phases is missing.
	Unit overtemperature protection	Alarm limit: 65 °C (heatsink); 75 °C (circuit boards). Trip limit: 70 °C (heatsink); 85 °C (circuit boards).
	Overcurrent protection	Yes
	Motor overload protection	Yes * Motor overload protection provided at 110% of full motor load current.
	Motor stall protection	Yes
	Motor underload protection	Yes
	Short-circuit protection of +24 V and +10 V reference voltages	Yes

*) NXP00002V186 (or newer) must be used for the motor thermal memory and memory retention functionality to conform to UL 508C requirements. If an older system software version is used, motor overtemperature protection is required at installation to comply with UL requirements.

Table 13. Technical data

Liquid cooling	Allowed cooling agents	Drinking water (see specification on page 49). Water-glycol mixture. See derating specifications, Chapter 5.3.
	Volume	See page 51.
	Temperature of cooling agent	0...35 °C input (I_{th}); 35...55 °C: derating required, see Chapter 5.3. Max. temperature rise during circulation max. 5 °C No condensation allowed. See Chapter 5.2.1.
	Cooling agent flow rates	See Table 15.
	System max. working pressure	6 bar
	System max. peak pressure	30 bar
	Pressure loss (at nom. flow)	Varies according to size. See Table 17.

5. INSTALLATION

5.1 MOUNTING

VACON® NX Liquid-Cooled Drive modules must be installed into an enclosure. The drives consisting of one module will be mounted on the mounting plate. The drives that include two or three modules are mounted inside a mounting bracket (see table below) which will then be installed in the enclosure.

NOTE! If any other than vertical installation position is required, contact your distributor!

NOTE! The allowed installation temperature is 0...+70 °C.

In Chapter 5.1.2 you will find the dimensions of VACON® NX Liquid-Cooled drives installed on mounting bases (plates and brackets).

5.1.1 LIFTING THE DRIVE

We recommend you to always use a jib crane or similar elevating device to lift the AC drive/ inverter unit. See figures below for correct lifting points.

For units with no mounting bracket (see Chapter 5.1.2.1), the best place for hoisting is the hole(s) in the middle of the mounting plate (Lifting point 1). VACON® NX Liquid-Cooled drives consisting of several modules can the most safely and easily be lifted by the holes in the mounting bracket (Lifting point 2) using a screw pin shackle. Pay also attention to the recommended dimensions of the hoisting belt and the beam. See Figure 3.

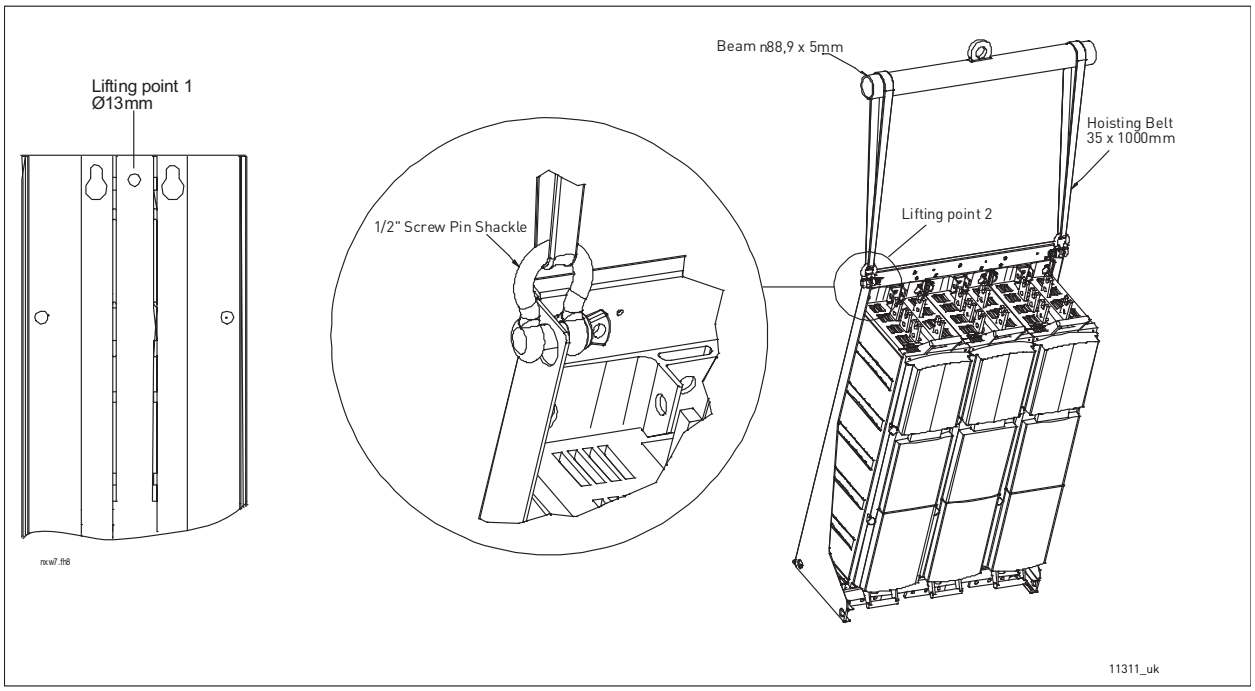

Figure 3. Lifting points for drives consisting of one module (left) and several modules

In cabinet installation, the hoisting procedure described above right may, however, become difficult or even impossible if the cabinet width does not allow the use of the screw pin shackle in Lifting point 2 (see above).

In such case, follow the lifting procedure described in Figure 4. The mounting becomes easier and safer if the drive can be laid on a supporting girder fixed on the cabinet frame. We also recommend to use an aligning stud to guarantee an easy and safe mounting.

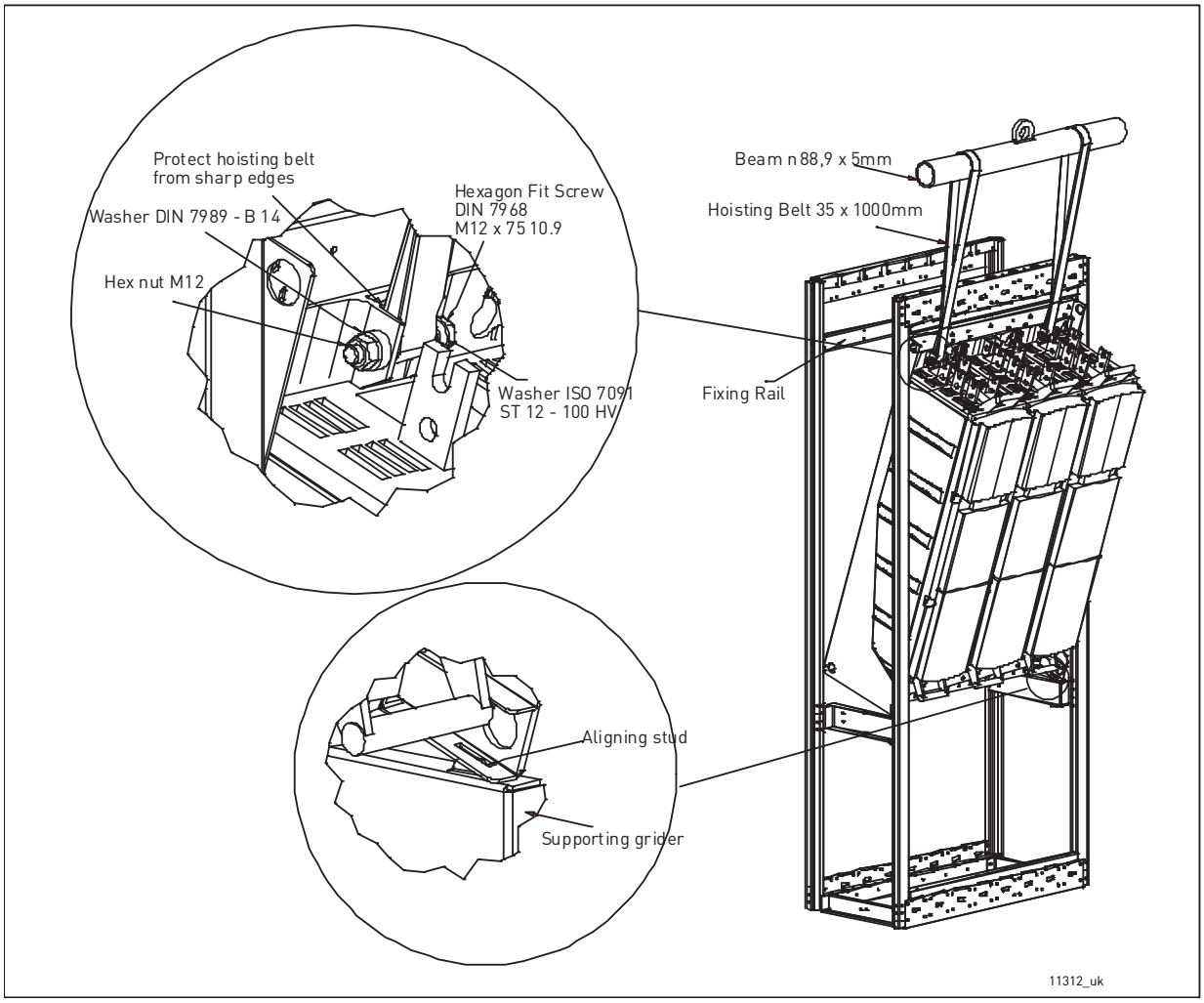

Figure 4. Lifting of drive into a narrow mounting space

To additionally stabilize the cabinet with the drive, we recommend to mount a fixing rail on the back of the cabinet, to which the top of the drive can be fastened with 5 or 6 M5 screws. The cut-out is compatible with Rittal or Veda cabinets. Also secure the drive with M8 nuts and studs to the supporting girder. See Figure 4 and Figure 5.

The VACON® NX Liquid-Cooled drives are equipped with plastic handles and these handles can be used to move and lift drives consisting of one power module (CH61, CH62, & CH72) by hand.

NOTE! Never lift a drive from the plastic handle or handles with an elevating device, such as jib crane or hoist. Recommended lifting procedure for these units are as described in Figure 3 and Figure 4.

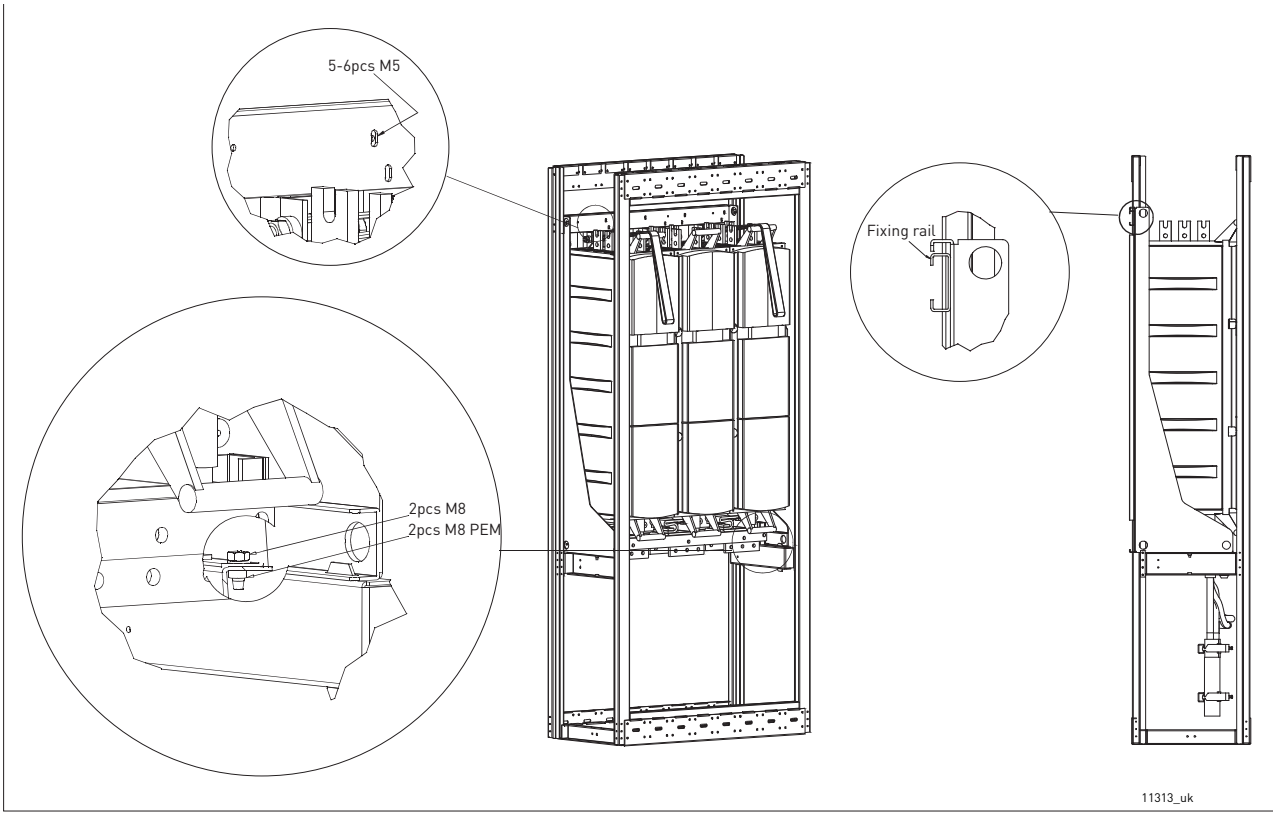

Figure 5. Securing the drive to the cabinet frame

5.1.2 VACON® NX LIQUID-COOLED DIMENSIONS

5.1.2.1 Drives consisting of one module

Table 14. One-module drive dimensions (mounting base included)

Chassis	Width	Height	Depth	Weight*
CH3	160	431	246	15
CH4	193	493	257	22
CH5	246	553	264	40
CH61/62	246	658	372	55
CH72	246	1076	372	90

*. AC choke excluded.

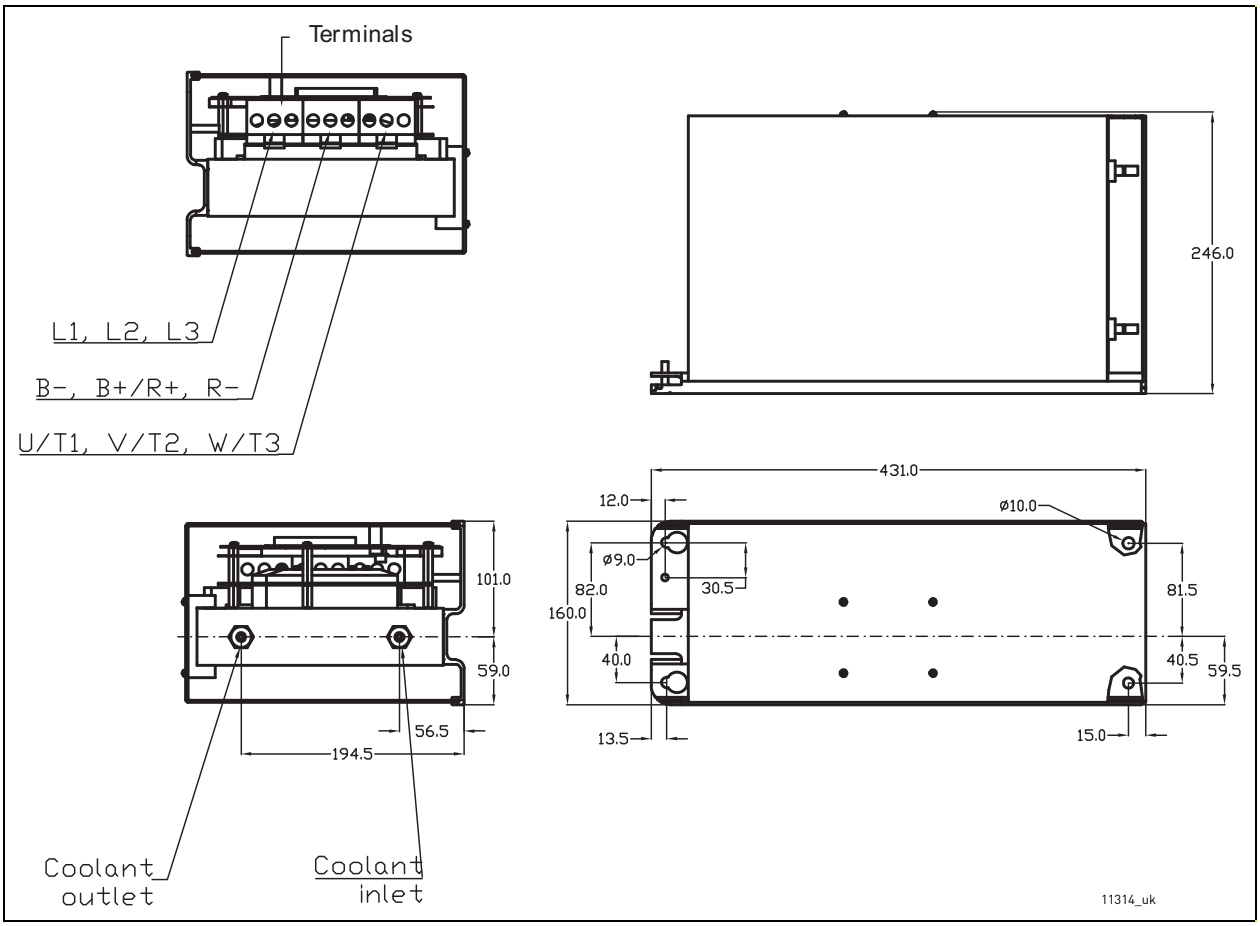

Figure 6. VACON® NX Liquid-Cooled drive dimensions, CH3

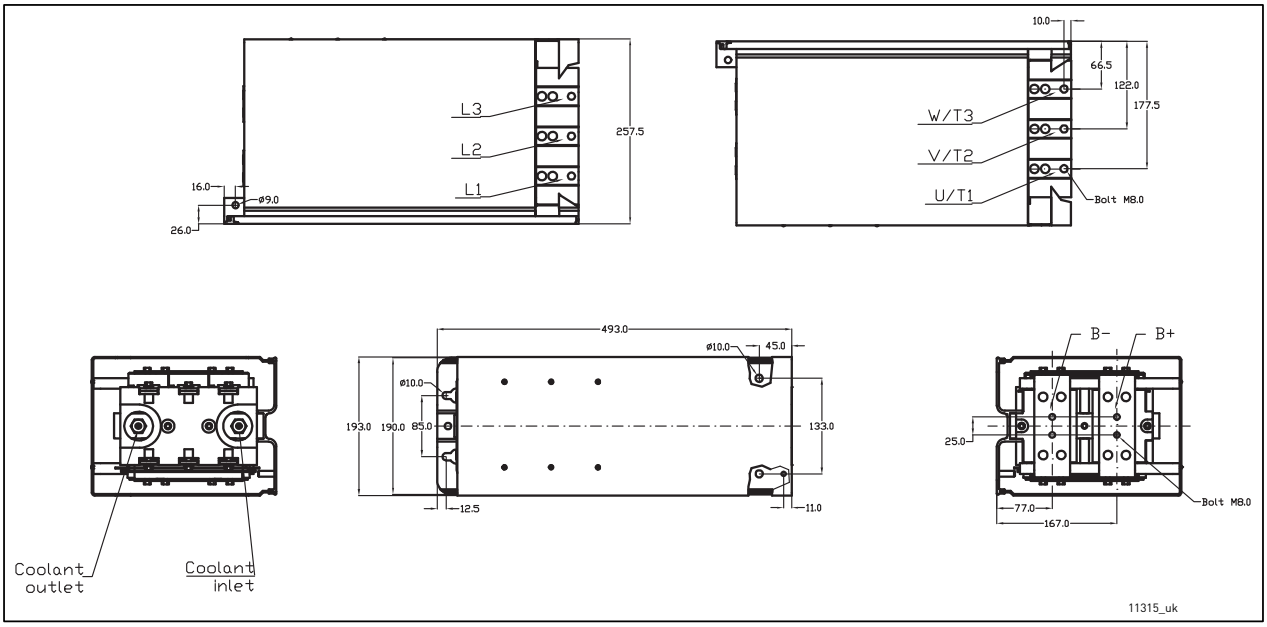

Figure 7. VACON® NX Liquid-Cooled drive dimensions (AC drive), CH4

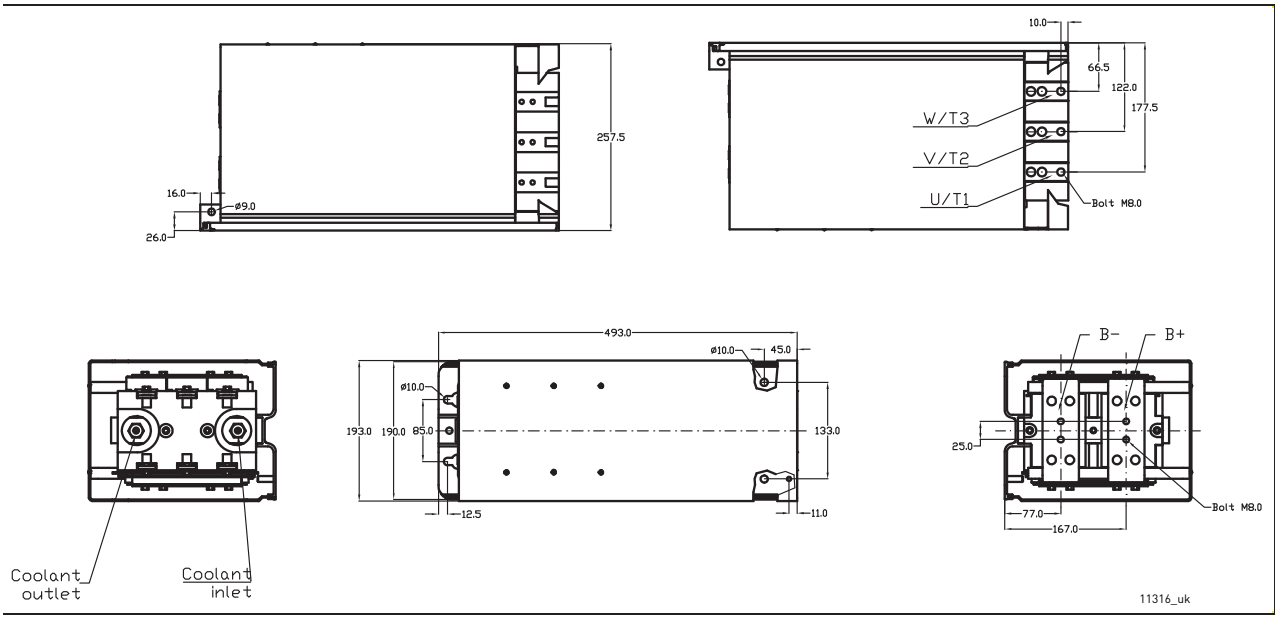

Figure 8. VACON® NX Liquid-Cooled drive dimensions (inverter), CH4

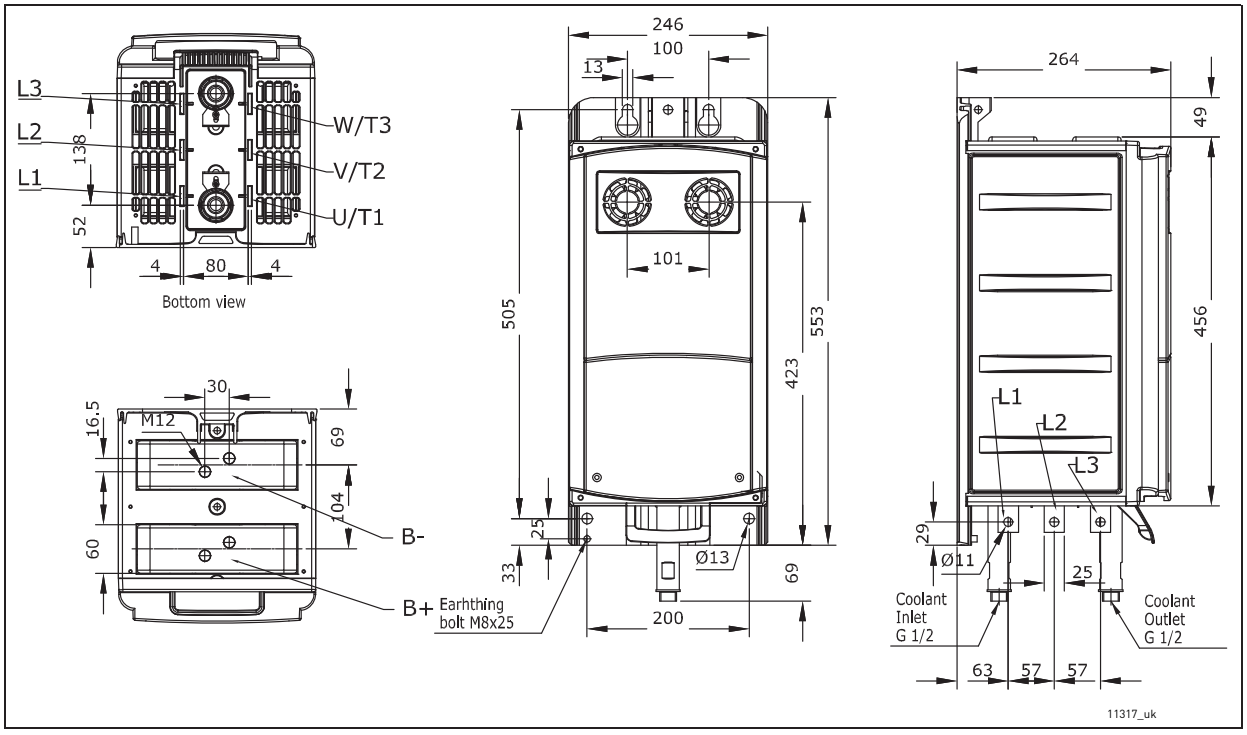

Figure 9. VACON® NX Liquid-Cooled dimensions, CH5 AC drive

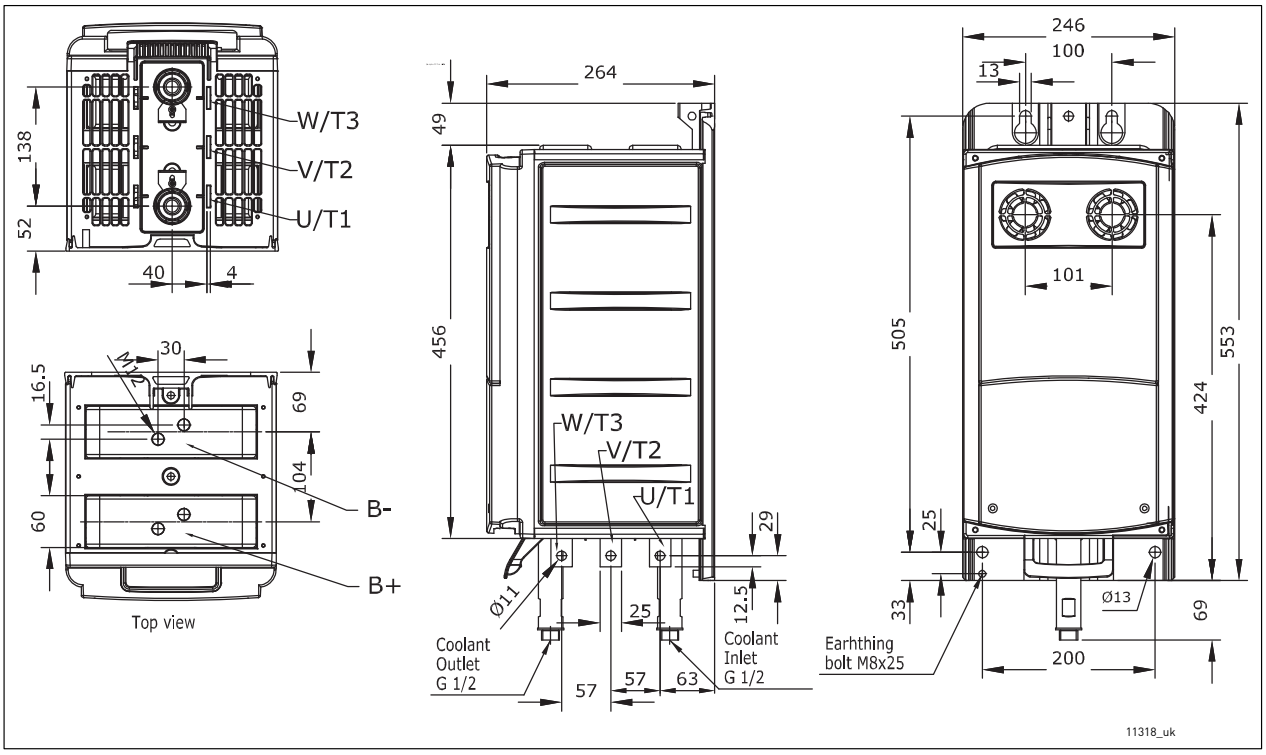

Figure 10. VACON® NX Liquid-Cooled dimensions, CH5 inverter

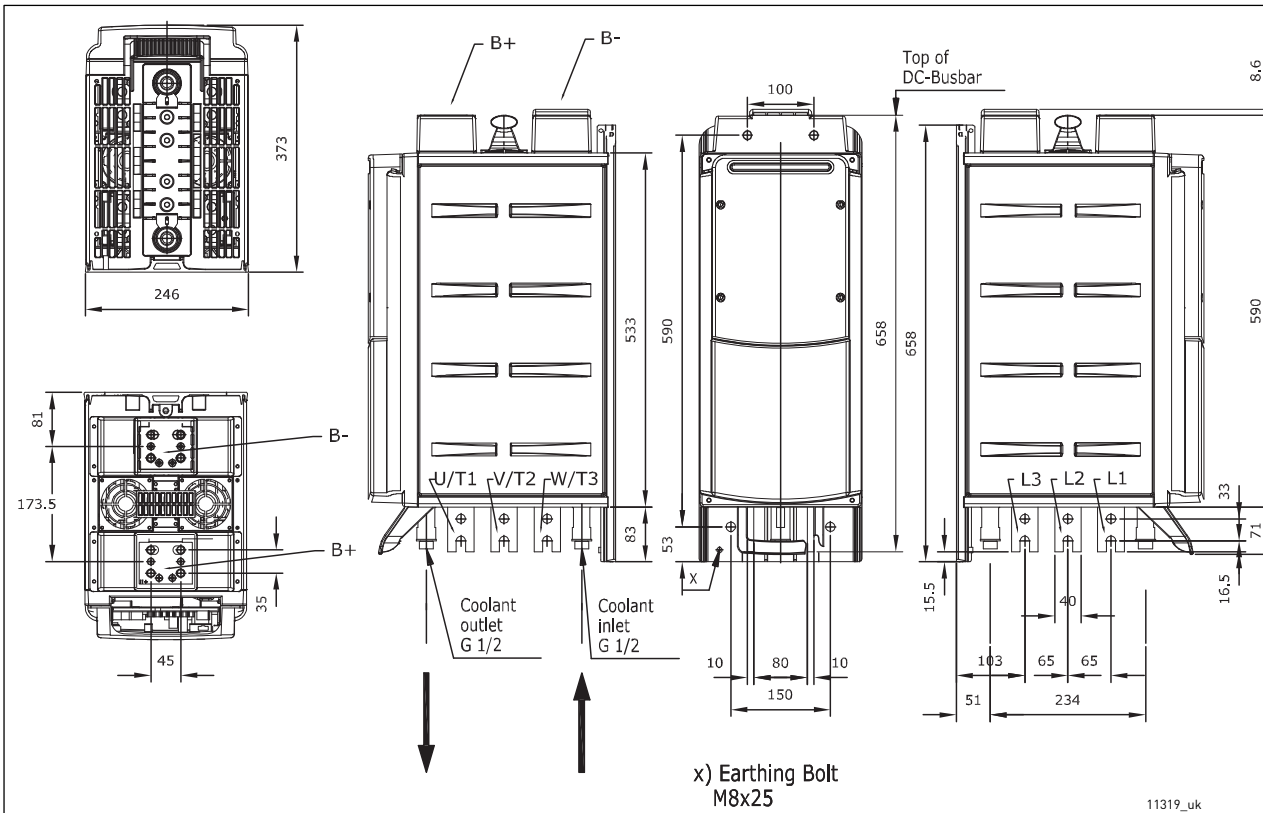

Figure 11. VACON® Liquid-Cooled AC drive, CH61

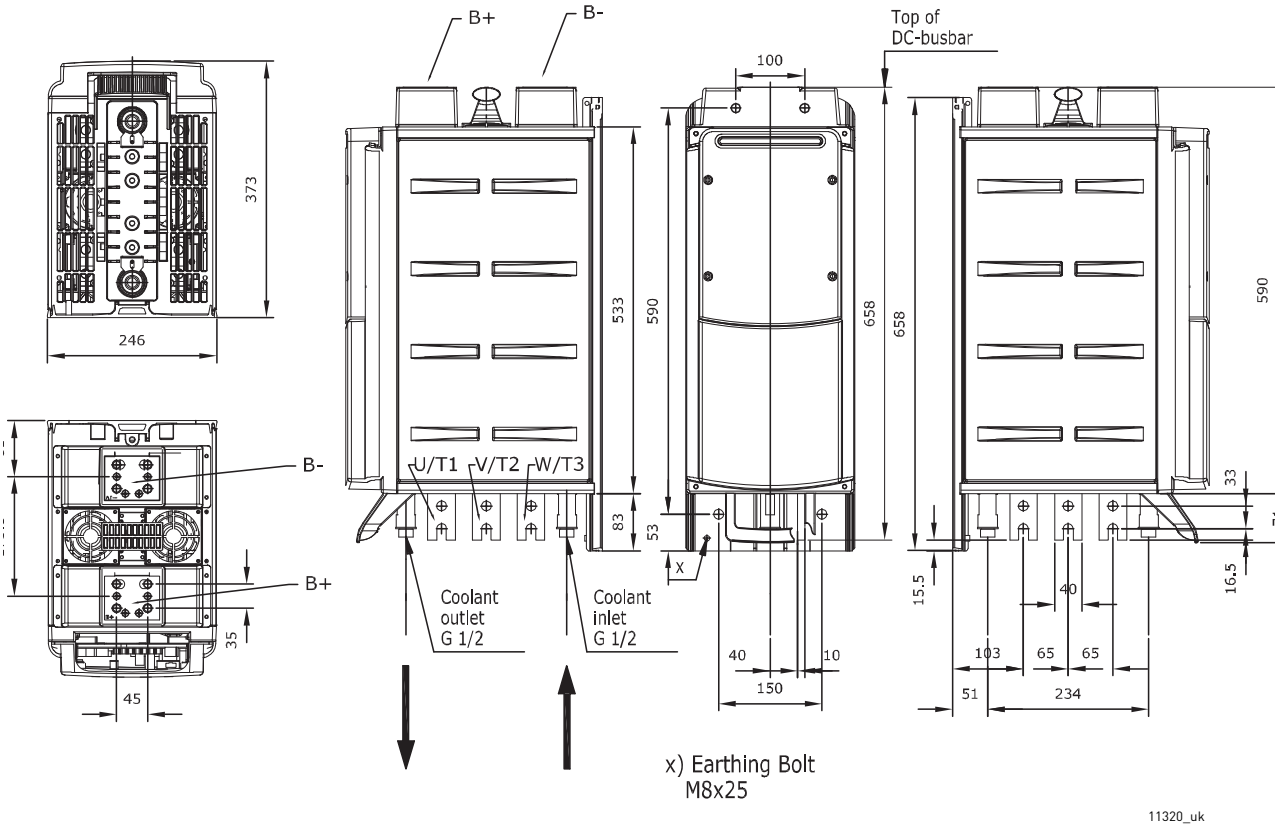

Figure 12. VACON® Liquid-Cooled inverter, CH61

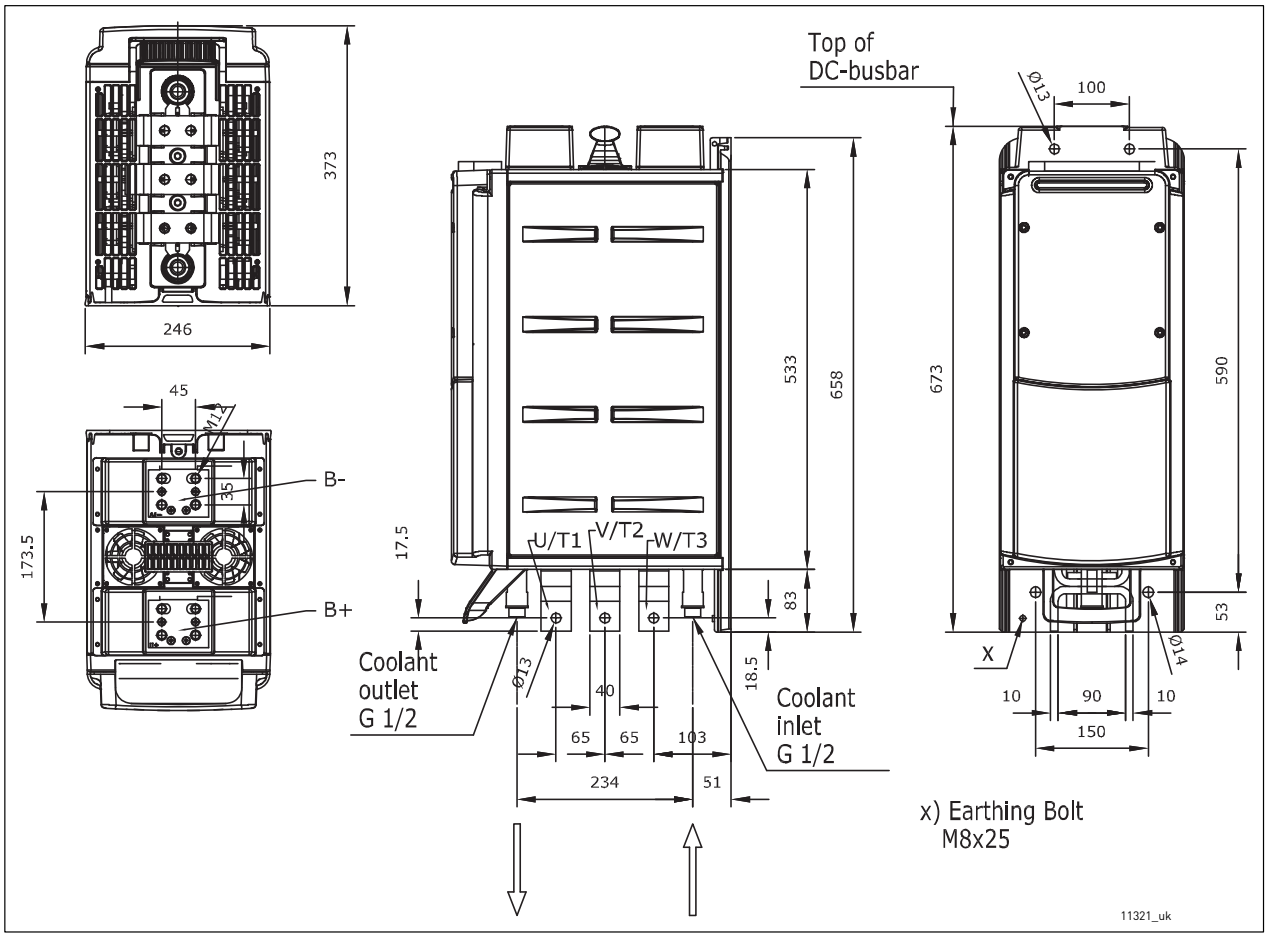

Figure 13. VACON® Liquid-Cooled inverter, CH62

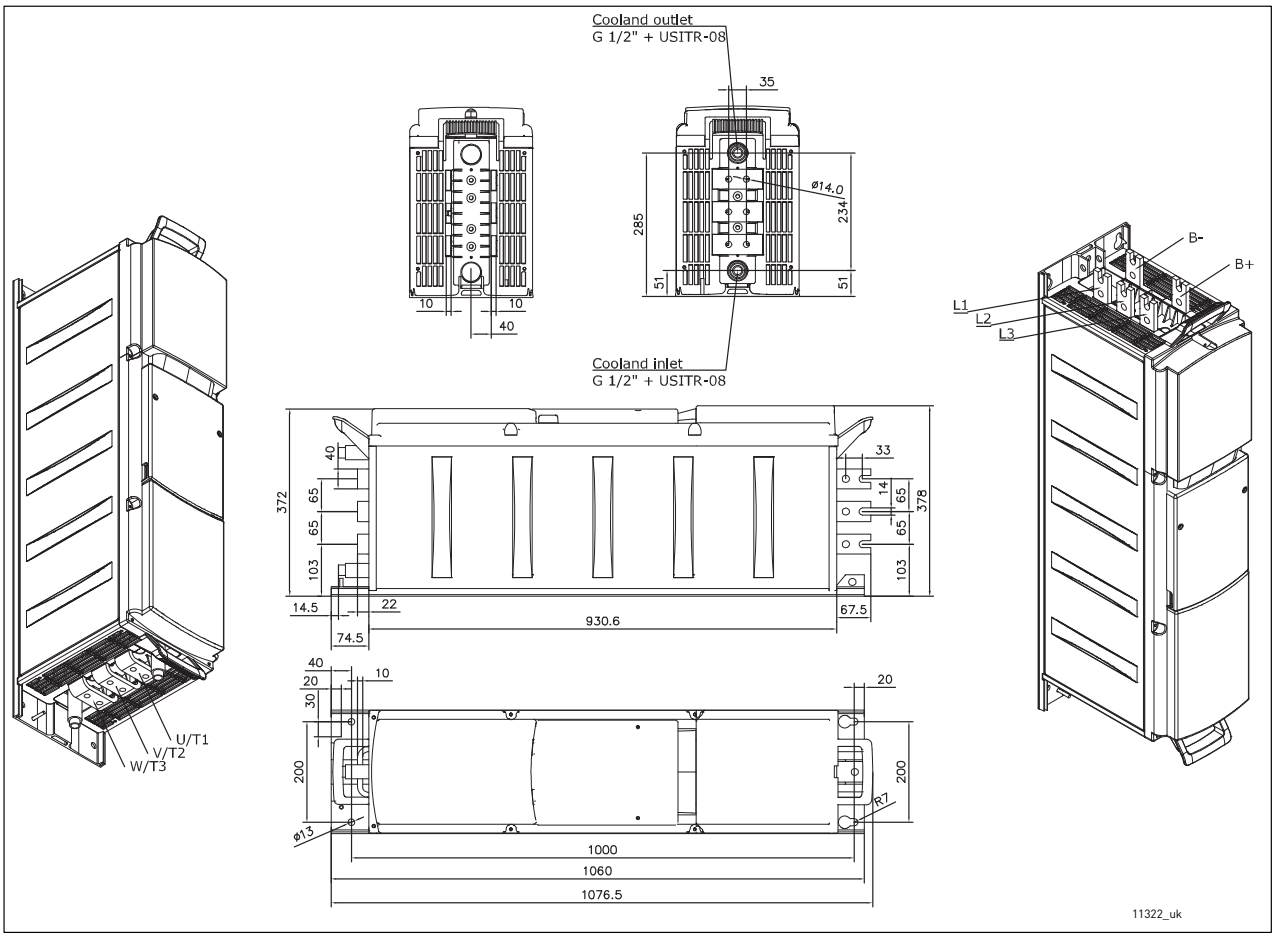

Figure 14. VACON® Liquid-Cooled AC drive (6-pulse), CH72

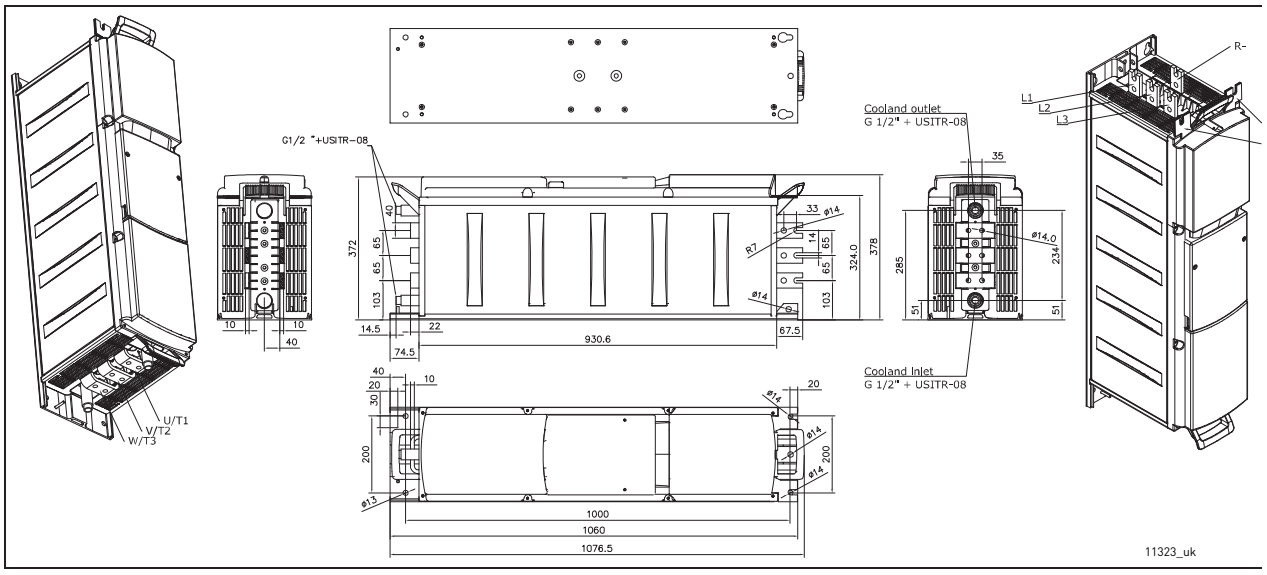

Figure 15. VACON® Liquid-Cooled AC drive (6-pulse) with internal brake chopper

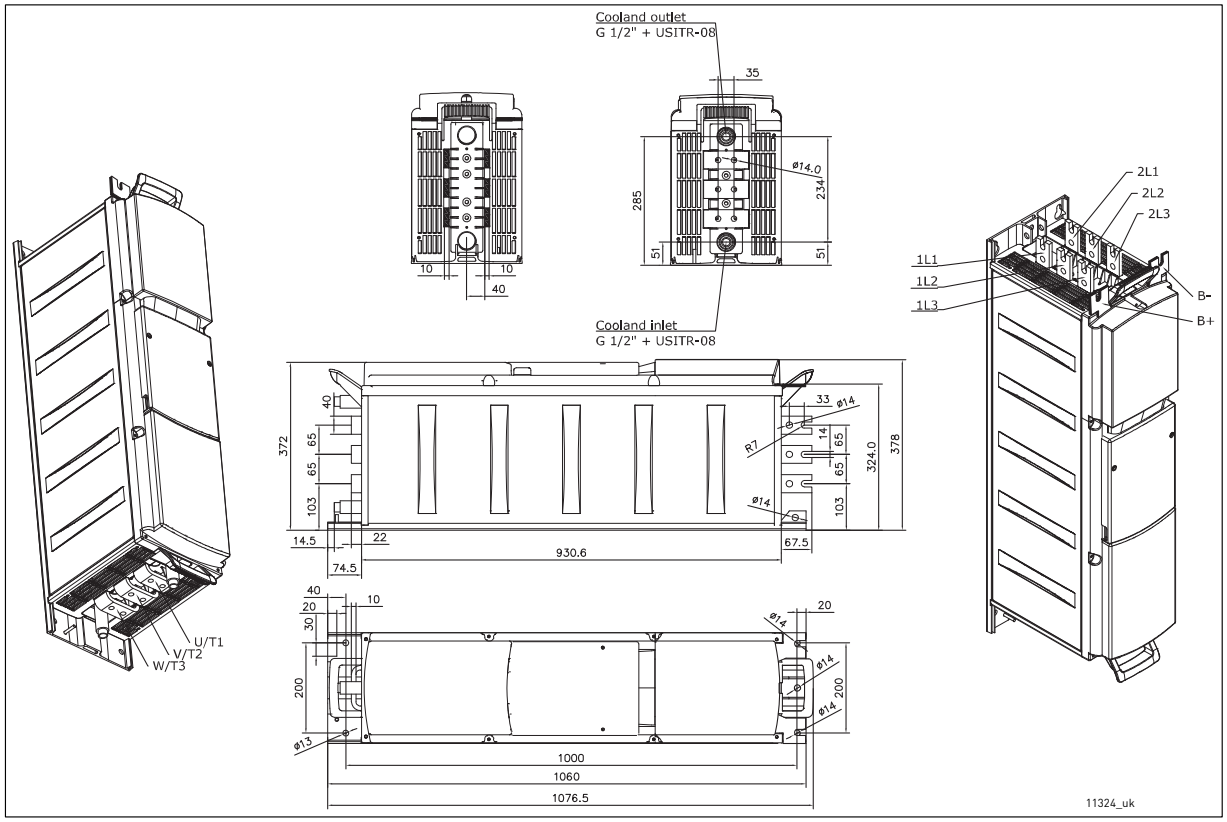

Figure 16. VACON® Liquid-Cooled AC drive (12-pulse), CH72

5.1.2.2 Drives consisting of several modules

VACON® NX Liquid-Cooled drives consisting of several modules are mounted in a mounting bracket as presented in Figure 17.

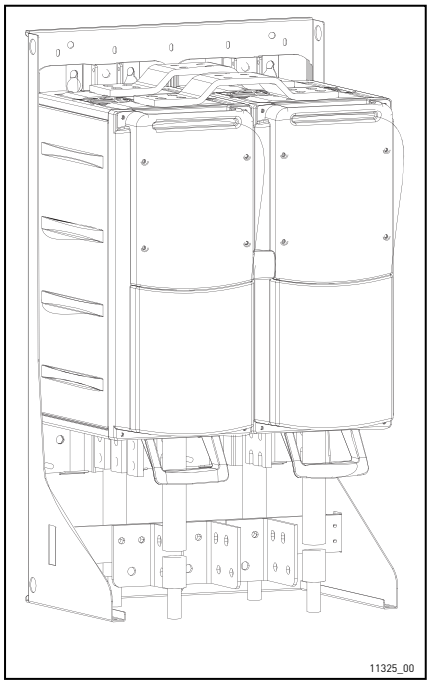

Figure 17. Drive mounted inside mounting bracket

Table 15. Several-module drive dimensions (mounting bracket incl.)

Chassis	Width	Height	Depth	Weight
CH63	505	924	375	120
CH64	746	924	375	180
CH74	746	1175	385	280

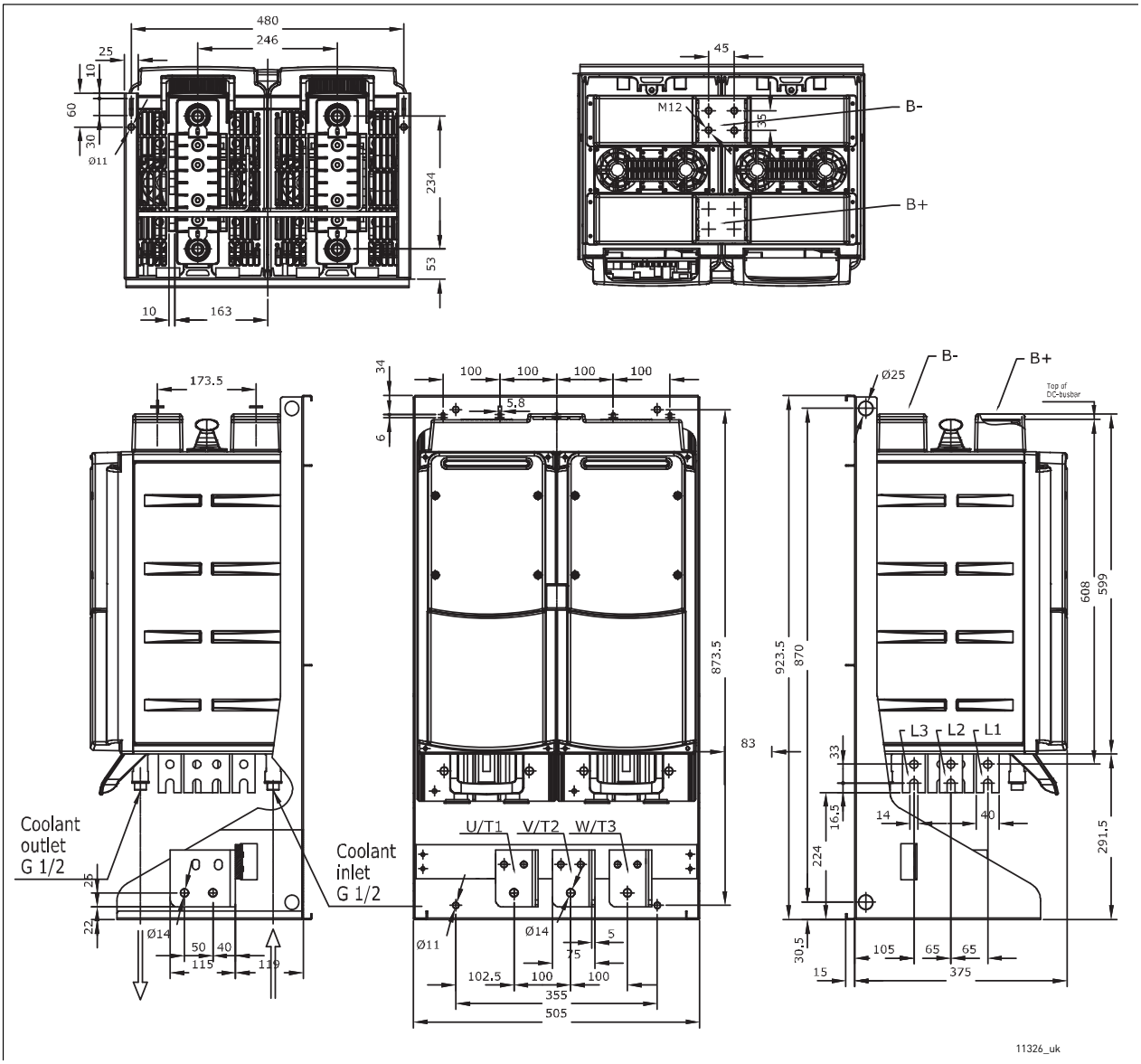

Figure 18. VACON® Liquid-Cooled AC drive with mounting bracket, CH63

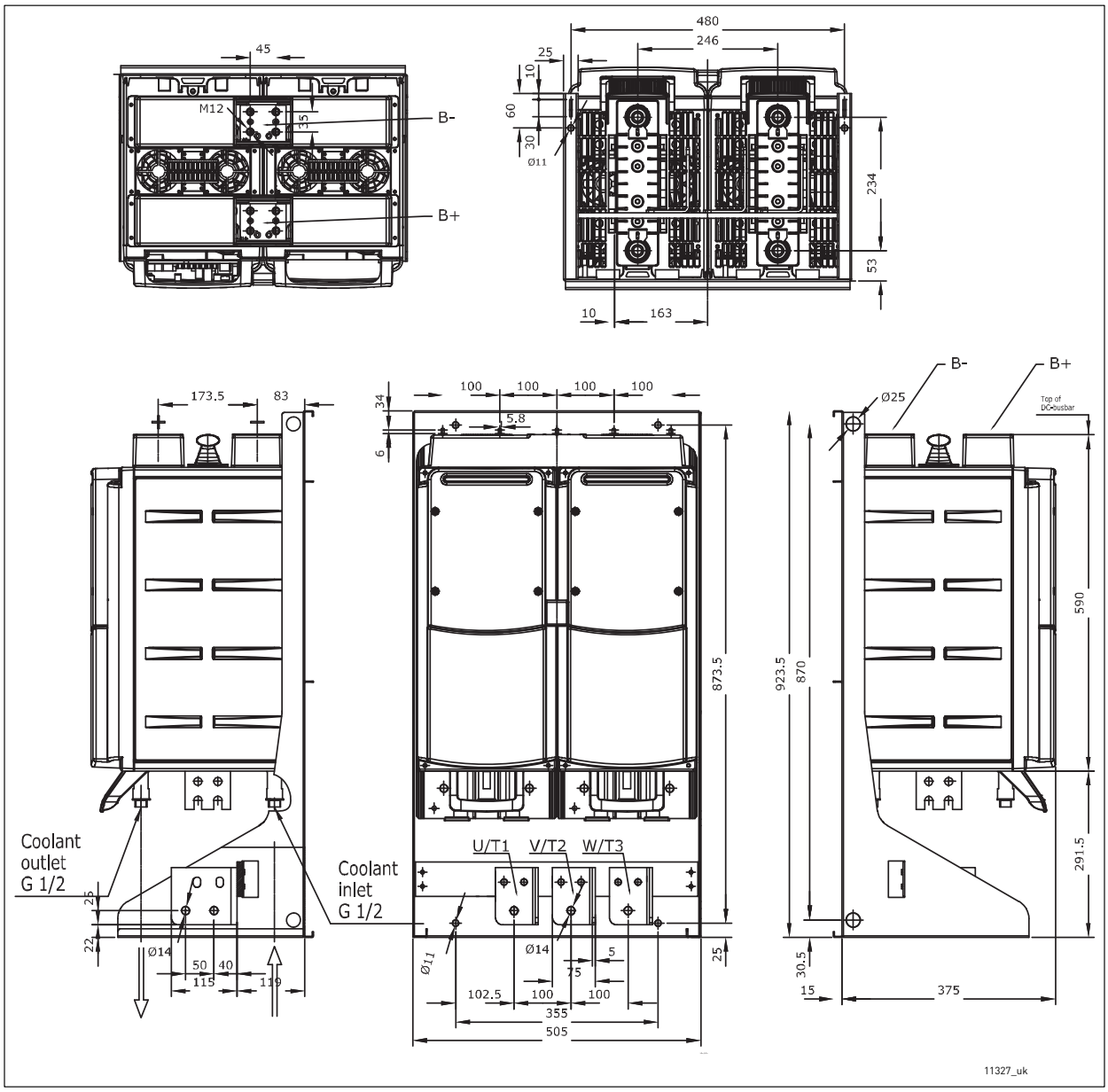

Figure 19. VACON® Liquid-Cooled inverter with mounting bracket, CH63

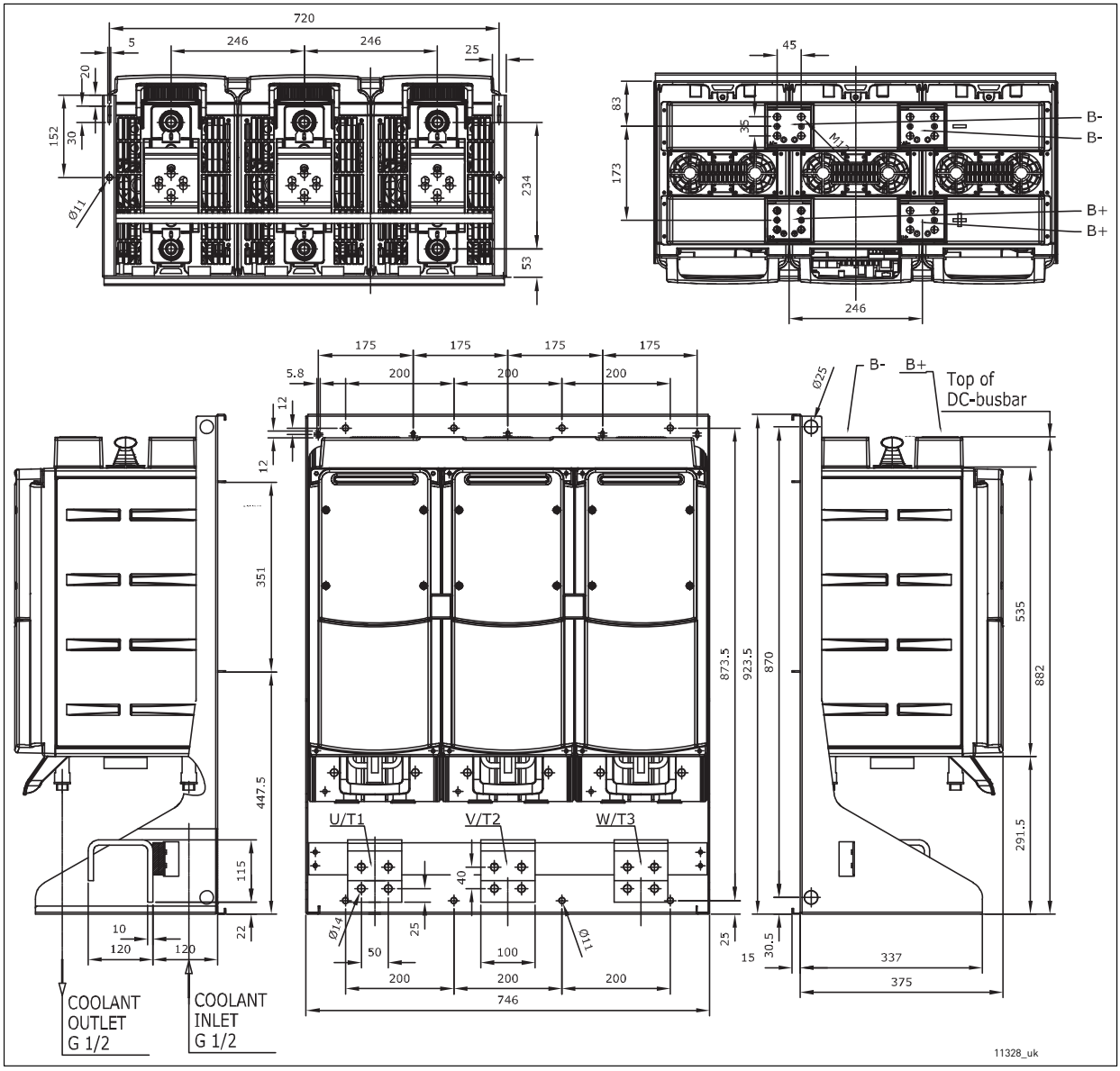

Figure 20. VACON® NX Liquid-Cooled inverter dimensions, CH64, IP00

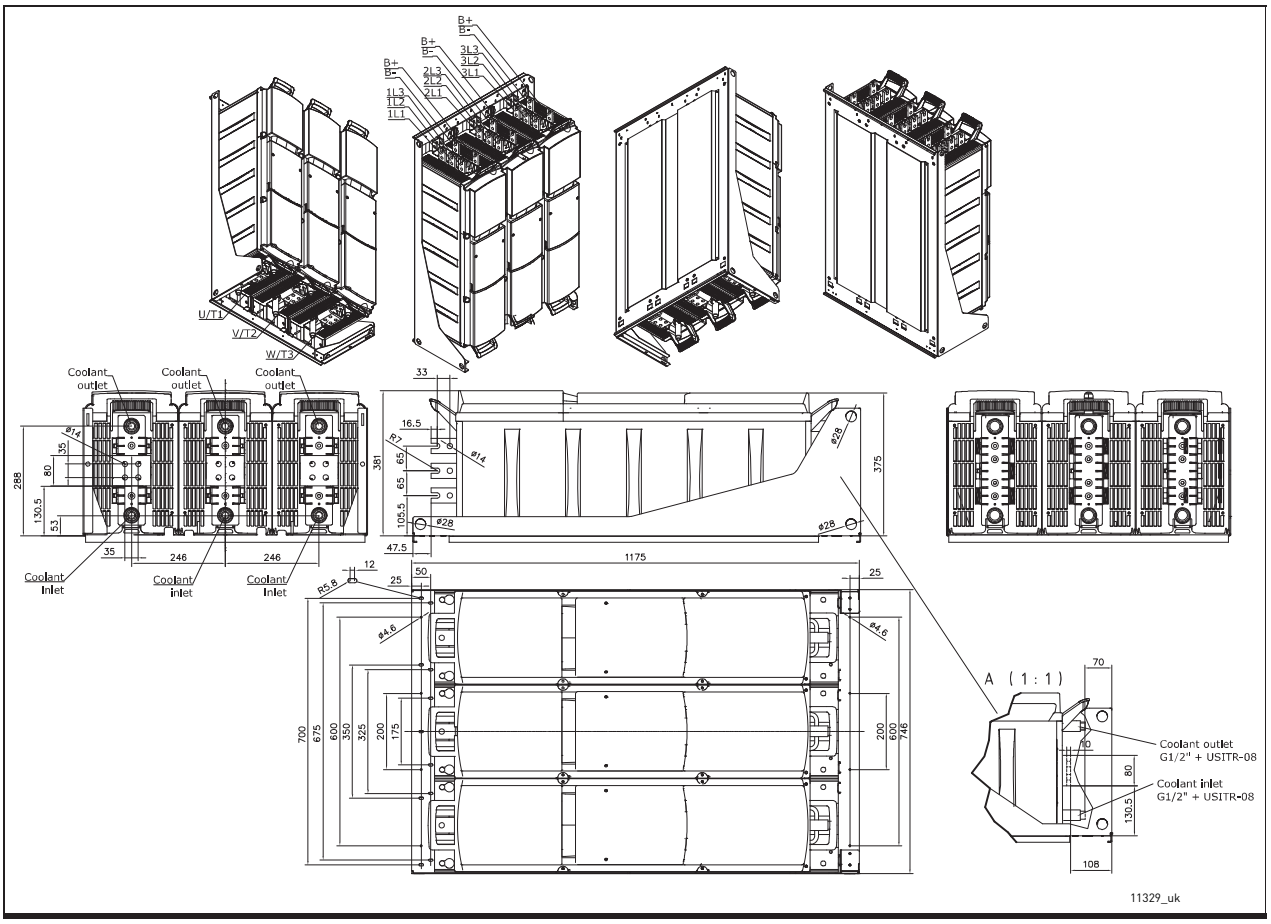

Figure 21. VACON® NX Liquid-Cooled AC drive (6-pulse) dimensions, CH74, IP00

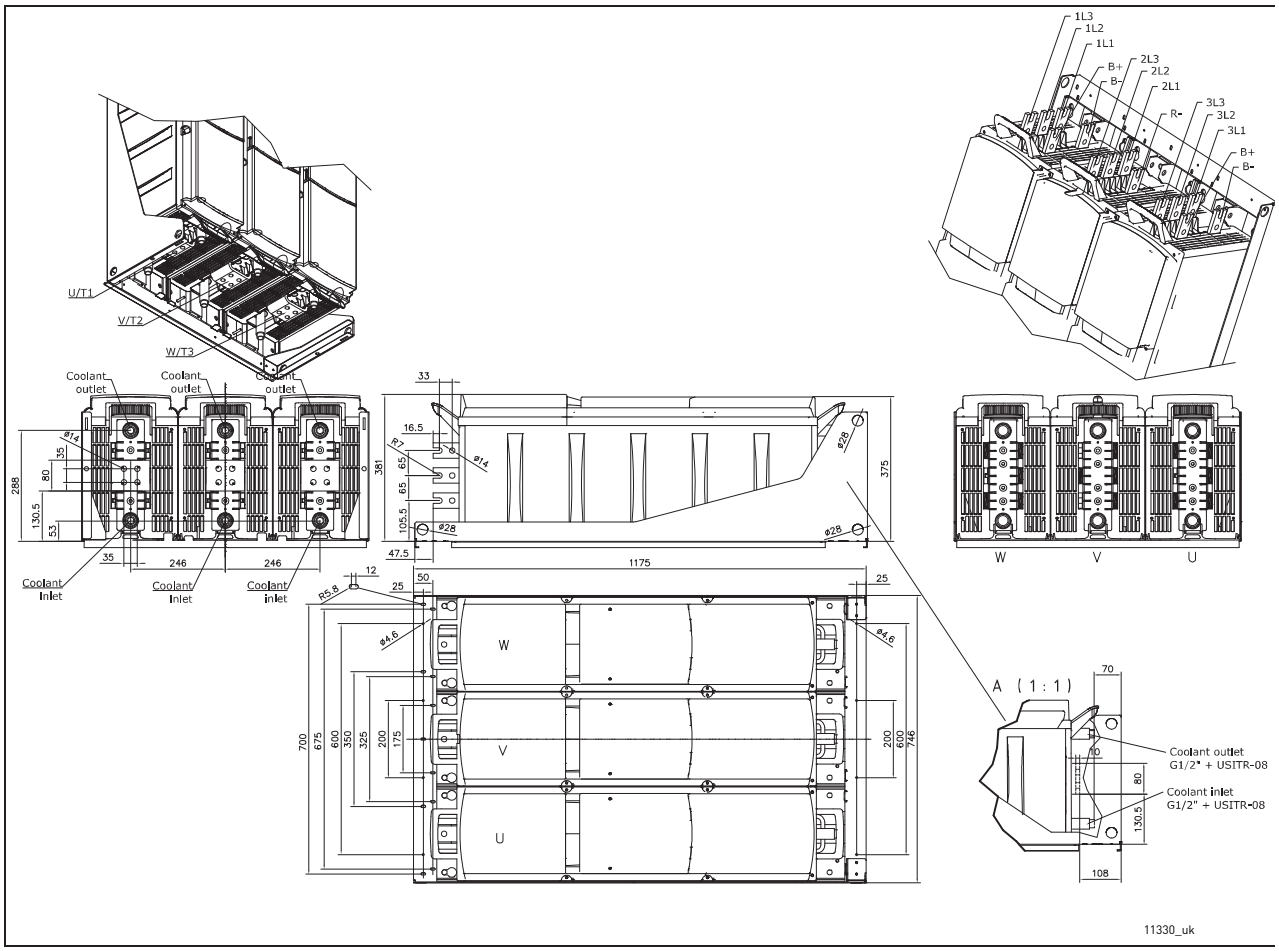

Figure 22. VACON® NX Liquid-Cooled AC drive (6-pulse) with internal brake chopper dimensions, CH74, IP00

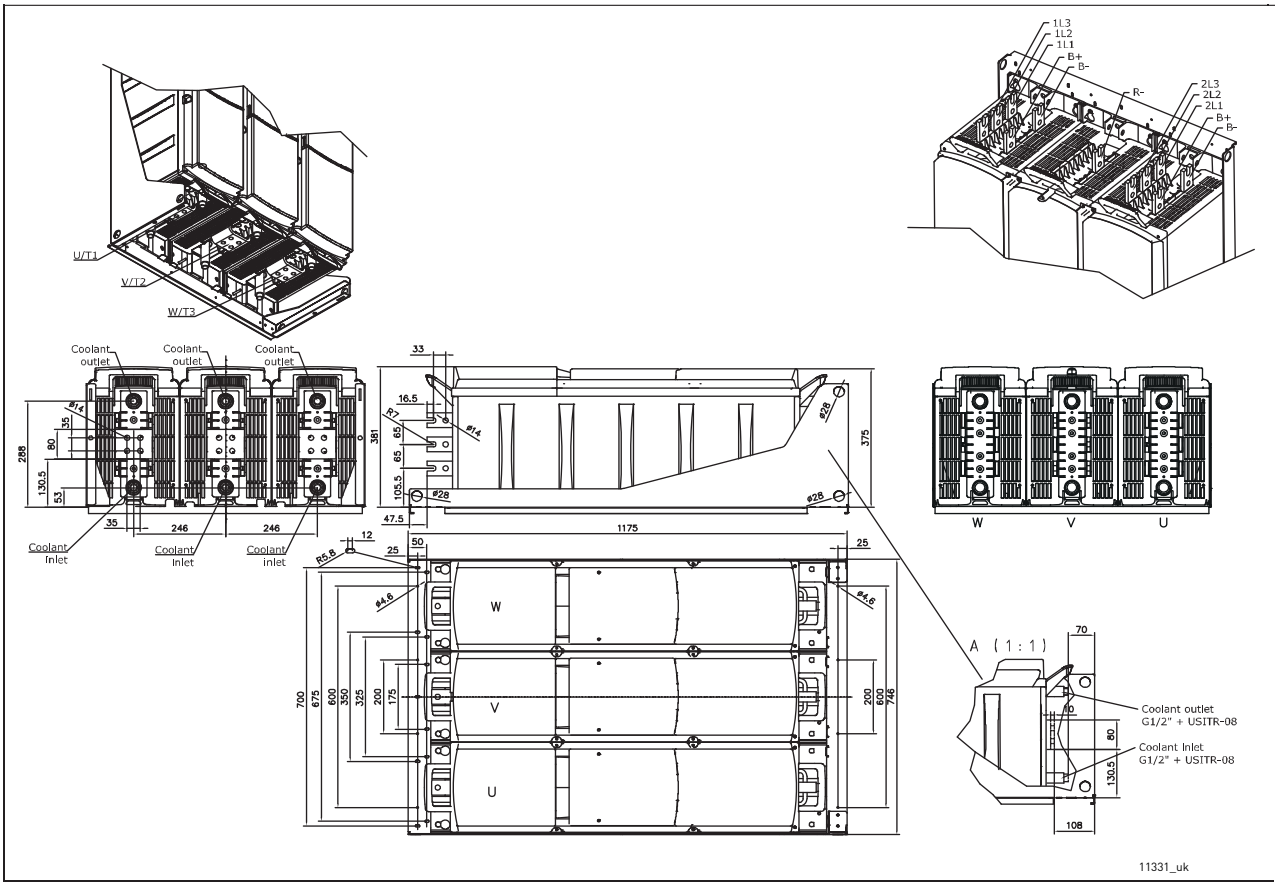

Figure 23. VACON® NX Liquid-Cooled AC drive (12-pulse) with internal brake chopper dimensions, CH74, IP00

5.2 COOLING

Instead of using air for cooling, VACON® NX Liquid-Cooled drives are cooled with liquid. The liquid circulation of the drive is usually connected to a heat-exchanger (liquid-liquid/liquid-air) which cools down the liquid circulating in the cooling elements of the drive. Because the cooling elements are made of aluminium, the cooling agents allowed to be used are drinking water, demineralized water or a mixture of water and glycol.

There are two types of circulation system: open systems and closed systems.

An open system has no pressure, and allows free contact with air.

In a closed system, the piping is completely air-tight and there is pressure inside the pipes. The pipes must be made of metal, or specific plastic or rubber that includes an oxygen barrier. Preventing of oxygen diffusion in the coolant diminishes the risk of electrochemical corrosion of the metal parts, and generation of rust deposits. Always use a closed system with VACON® NX Liquid-Cooled drives.

In case there is no other option than using an open system, you must take several precautions.

1. Use glycol and inhibitor in the coolant.
2. Examine the water quality regularly, and add inhibitor accordingly.
3. Yearly check that the properties of the cooling liquid are in accordance with the specification in this manual.

In a closed circulation system, the following figures are recommended reference values. To avoid electrochemical corrosion, it is necessary to add an inhibitor (e.g. Cortec VpCI-649) in the cooling agent.

Add inhibitor to the cooling agent every 2 years and change the cooling agent every 6 years.

The addition of each 0.05% of VpCI-649 into the cooling agent increases the electrical conductivity with 75-100 µS. The maximum value depends on the added dosage rate.

The heat-exchanger delivered by VACON® (HX) consists of stainless steel materials. The good corrosion performance of stainless steel in district water systems is utilized and no disadvantage of divergent metal filler is included. Nevertheless, some precautions must be taken to reduce the corrosion risk on the stainless steel in high chloride waters, see Table 18. We recommend to use a VACON® HX heat exchanger whenever possible.

NOTE! If no heat-exchanger is used, actions must be taken to avoid electrochemical corrosion. Specifically no brass or copper elements may be used in the liquid circulation of the drive.

Copper and brass may be used in the liquid circulation in case the liquid-cooled drive is equipped with a nickel coated aluminum heatsink.

Specification: Drinking water

The attached table gives the chemical requirements for drinking water provided for by the Finnish Ministry of Social Affairs and Health. These values are indicative.

Table 16. Drinking water chemical specification

Quality	Unit	Value
Acrylamide	µg/l	0.10
Antimony	µg/l	5.0
Arsenic	µg/l	10
Benzene	µg/l	1.0

Table 16. Drinking water chemical specification

Quality	Unit	Value
Benzopyrene	µg/l	0.010
Boron	mg/l	1.0
Bromate	µg/l	10
Cadmium	µg/l	5.0
Chromium	µg/l	50
Copper	mg/l	2.0
Cyanides	µg/l	50
1,2-Dichloroethane	µg/l	3.0
Epichlorohydrin	µg/l	0.10
Fluoride	mg/l	1.5
Lead	µg/l	10
Mercury	µg/l	1.0
Nickel	µg/l	20
Nitrate (NO_3^-)	mg/l	50
Nitrate-Nitrogen (NO_3-N)	mg/l	11.0
Nitrite (NO_2^-)	mg/l	0.5
Nitrite-Nitrogen (NO_2-N)	mg/l	0.15
Bactericides	µg/l	0.10
Bactericides, total	µg/l	0.50
Polynuclear aromatic hydrocarbons	µg/l	0.10
Selenium	µg/l	10
Tetrachloroethylene and trichloroethylene tot.	µg/l	10
Trihalomethanes tot.	µg/l	100
Vinyl chloride	µg/l	0.50
Chlorophenols total	µg/l	10

Local contacts: http://drives.danfoss.com/danfoss-drives/local-contacts/

Table 17. Drinking water quality recommendations

Quality	Unit	Max. value
Aluminium	µg/l	200
Ammonium (NH_4^+)	mg/l	0.50
Ammonium (NH_4-N)	mg/l	0.40
Chloride[1]	mg/l	<100
Manganese	µg/l	50
Iron	µg/l	<0.5
Sulphate [1] [2]	mg/l	250
Sodium	mg/l	200
Oxidizability (COD_{Mn}-O_2)	mg/l	5.0
Quality	**Unit**	**Desired value**
Clostridium perfringens (including spores)	pmy/100 ml	0
Coliform bacteria	pmy/100 ml	0
Bacterial count (22 °C)		No unusual changes
pH[1]	pH	6...8
Electrical conductivity[1]	µS/cm	<100
Turbidity		To be approved by user and no unusual changes
Colour		No unusual changes
Smell and taste		No unusual changes
Total organic carbon (TOC)		No unusual changes
Tritium	beq/l	100
Indicative total dose	mSv/year	0.10
Water hardness	°dH	3...10
Max. particle size in coolant	µm	300

Notes:

1) No aggressive water allowed.

2) To avoid corrosion of piping, the sulphate content must not exceed 150 mg/l.

The cleanness of the heat exchanger, and therefore the heat exchanging capacity, depend on the purity of the process water. The more impure the water, the more frequently the heat exchanger needs cleaning. The following figures are reference values required of cooling circuit process water:

Specification: Process water

Table 18. Process water specification

Quality	Unit	Value
pH		6...9
Water hardness	°dH	<20
Electrical conductivity	µS/cm	<100
Chlorides (Cl) *	mg/l	<100
Iron (Fe)	mg/l	<0.5

*. The allowed concentration of chloride ions (Cl–): <1000 ppm at 20 °C, < 300 ppm at 50 °C and < 100 ppm at 80 °C; the values are given as guidance to reduce the corrosion risk on stainless steel. The values are valid for pH=7. Lower pH value increases the risk.

The design temperature of the cooling agent entering the drive module(s) is 35 °C. While circulating inside the cooling element, the liquid transfers the heat produced by the power semiconductors (and the capacitors). The design temperature rise of the cooling agent during the circulation is less than 5 °C. Typically, 95% of the power losses is dissipated in the liquid. We advise you to equip the cooling agent circulation with temperature supervision.

The heat exchanging equipment can be located outside the electrical room in which the AC drives are. The connections between these two are made on site. In order to minimize the pressure drops, the pipings must be made as straight as possible. We further recommend that a regulating valve equipped with a measurement point is mounted. This makes the measurement and regulation of liquid circulation possible in the commissioning phase.

In order to prevent dirt particles from accumulating in the connections and thus gradually weakening the cooling effect, installation of filters is also recommended.

The highest point of the piping must be equipped with either an automatic or a manual venting device. The material of the piping must comply with at least AISI 304 (AISI 316 is recommended).

Prior to the actual connection of the pipes, the bores must be cleaned thoroughly. If cleaning with water is not possible, although recommended, pressured air must be used to remove all loose particles and dust.

To facilitate the cleaning and venting of the coolant circulation, we recommend you to install a bypass valve in the main line and valves at each AC drive inlet. Open the bypass valve and shut the valves to the AC drive when cleaning and airing the system. On commissioning the system, the bypass valve must be closed and the valves to the AC drives opened.

Below you will find a simplified example of the cooling system as well as an example of the connections between the AC drives and the cooling system.

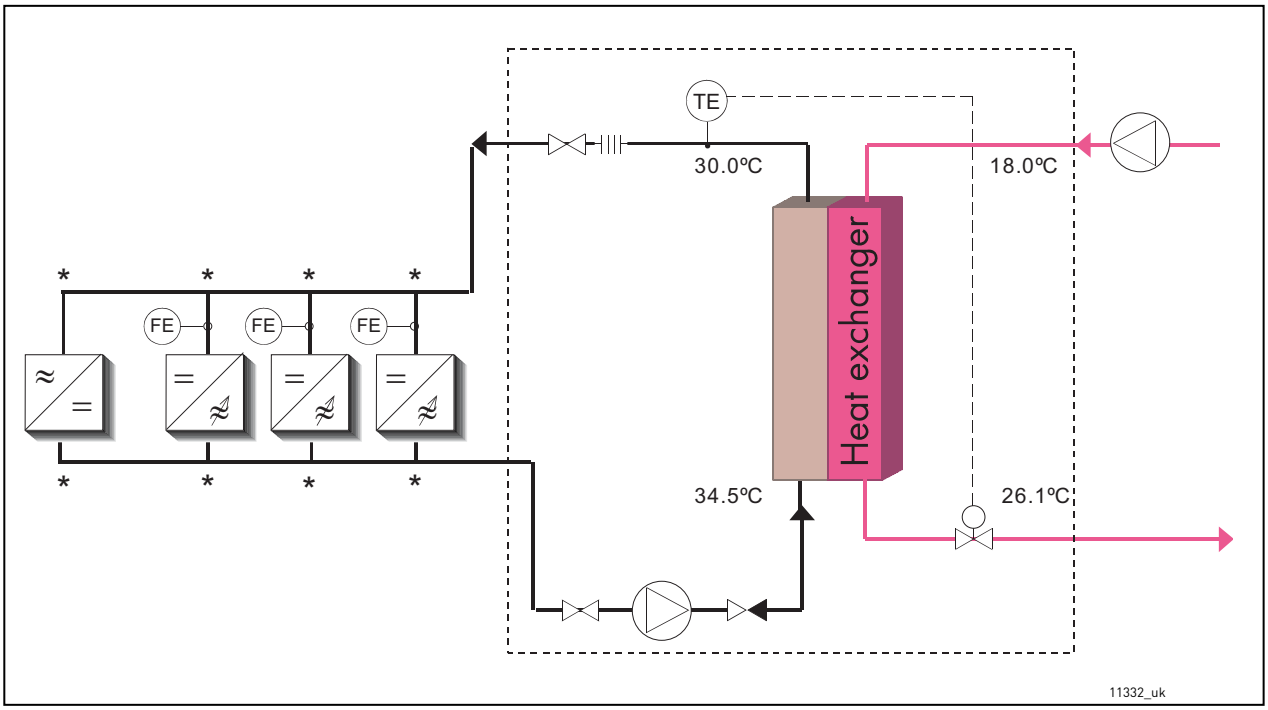

Figure 24. Example of cooling system

We recommend to equip the cooling system with pressure and flow supervision (FE). The flow supervision can be connected to digital input function External fault. If the coolant flow is found too low, the AC drive will be stopped.

The flow supervision and other actuators, e.g. a constant flow valve, are available as options. The options must be mounted at the junction of the main line and the branching line to the element, indicated with an asterisk (*) in the figure above.

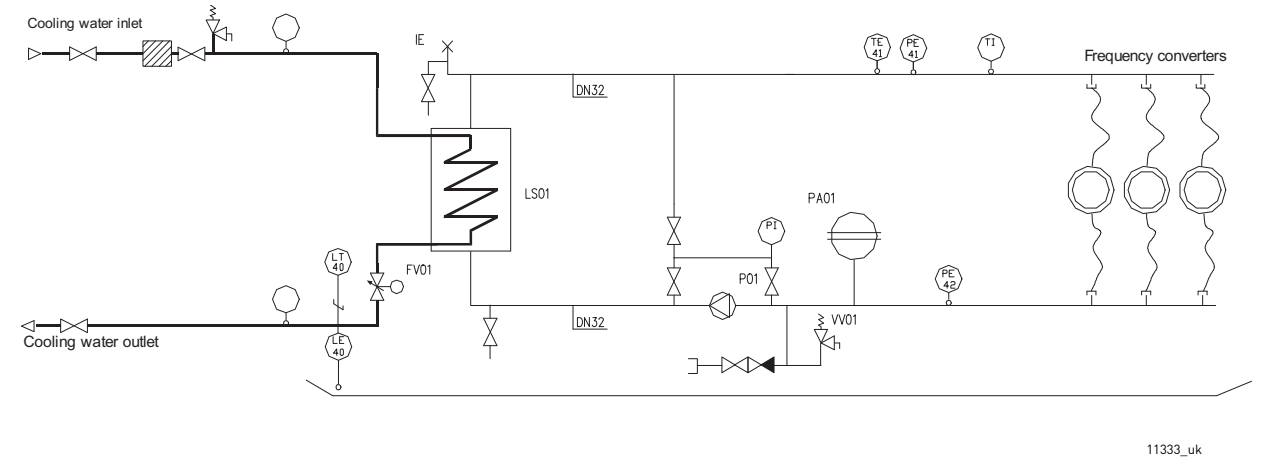

Figure 25. Example: PI-diagram of the cooling system and the connections

In tables below you will find the specifications related to the cooling agent and its circulation. See also Table 9 on page 25.

Table 19. Information about cooling agent and its circulation

Chassis	Min. liquid flow per element (drive) [dm^3/min]	Nom. liquid flow per element (drive) [dm^3/min]			Max. liquid flow per element (drive) [dm^3/min]	Liquid volume/ element [l]
	A	A	B	C	A	A
CH3	3 (3)	5 (5)	5.4 (5.4)	5.8 (5.8)	20 (20)	0.11
CH4	8 (8)	10 (10)	11 (11)	12 (12)	20 (20)	0.15
CH5	10 (10)	15 (15)	16 (16)	17 (17)	40 (40)	0.22
CH60	15 (15)	25 (25)	27 (27)	29 (29)	40 (40)	0.38
CH61	15 (15)	25 (25)	27 (27)	29 (29)	40 (40)	0.38
CH62	15 (15)	25 (25)	27 (27)	29 (29)	40 (40)	0.38
CH63	15 (30)	25 (50)	27 (54)	29 (58)	40 (80)	0.38
CH64	15 (45)	25 (75)	27 (80)	29 (86)	40 (120)	0.38
CH72	20 (20)	35 (35)	37 (37)	40 (40)	40 (40)	1.58
CH74	20 (60)	35 (105)	37 (112)	40 (121)	40 (120)	1.58

A = 100% water; B = Water/Glycol mixture 80:20; C = Water/Glycol mixture (60:40)

Definitions:
Min liquid flow = Minimum flow rate to ensure of total venting of the cooling element
Nom liquid flow = Flow rate that allows running the drive at Ith
Max liquid flow = If flow rate exceeds max liquid flow, risk of cooling element erosion increases

Liquid ref temperature, input: 30 °C
Max temperature rise during circulation: 5 °C

NOTE! Unless minimum liquid flow rate is ensured, air pockets may develop in the cooling elements. Automatic or manual de-airing of the cooling system must also be ensured.

The following table will help you to determine the appropriate flows of cooling agent (l/min) with given power losses (see Chapter 4.2).

Table 20. Cooling agent flow rates (l/min) in relation to power loss at certain glycol/water mixture

Power loss [kW]	Glycol/Water ratio					
	100/0	80/20	60/40	40/60	20/80	0/100
1	4.41	3.94	3.58	3.29	3.06	2.87
2	8.82	7.88	7.15	6.58	6.12	5.74
3	13.23	11.82	10.73	9.87	9.18	8.61
4	17.64	15.75	14.31	13.16	12.24	11.48
5	22.05	19.69	17.88	16.45	15.30	14.35

Local contacts: http://drives.danfoss.com/danfoss-drives/local-contacts/

Table 20. Cooling agent flow rates (l/min) in relation to power loss at certain glycol/water mixture

Power loss [kW]	Glycol/Water ratio					
	100/0	80/20	60/40	40/60	20/80	0/100
6	26.46	23.63	21.46	19.74	18.36	17.22
7	30.86	27.57	25.03	23.03	21.42	20.10
8	35.27	31.51	28.61	26.32	24.48	22.97
9	39.68	35.45	32.19	29.61	27.54	25.84
10	44.09	39.38	35.76	32.90	30.60	28.71

5.2.1 CONDENSATION

Condensation on the cooling plate of the VACON® NX Liquid-Cooled drive must be avoided. Therefore, the temperature of the cooling liquid must be kept higher than the temperature of the electrical room. Use the graph below to determine if the drive operating conditions (combination of room temperature, humidity and cooling liquid temperature) are safe, or, to choose the allowed temperature for the cooling liquid.

The conditions are safe when the point is below the respective curve. If not, take adequate precautions by decreasing the room temperature and/or the relative humidity or increase the cooling liquid temperature. Note that increasing the temperature of the cooling liquid above figures in loadability charts decreases the nominal output current of the drive. The below curves are valid at sea level altitude (1013 mbar).

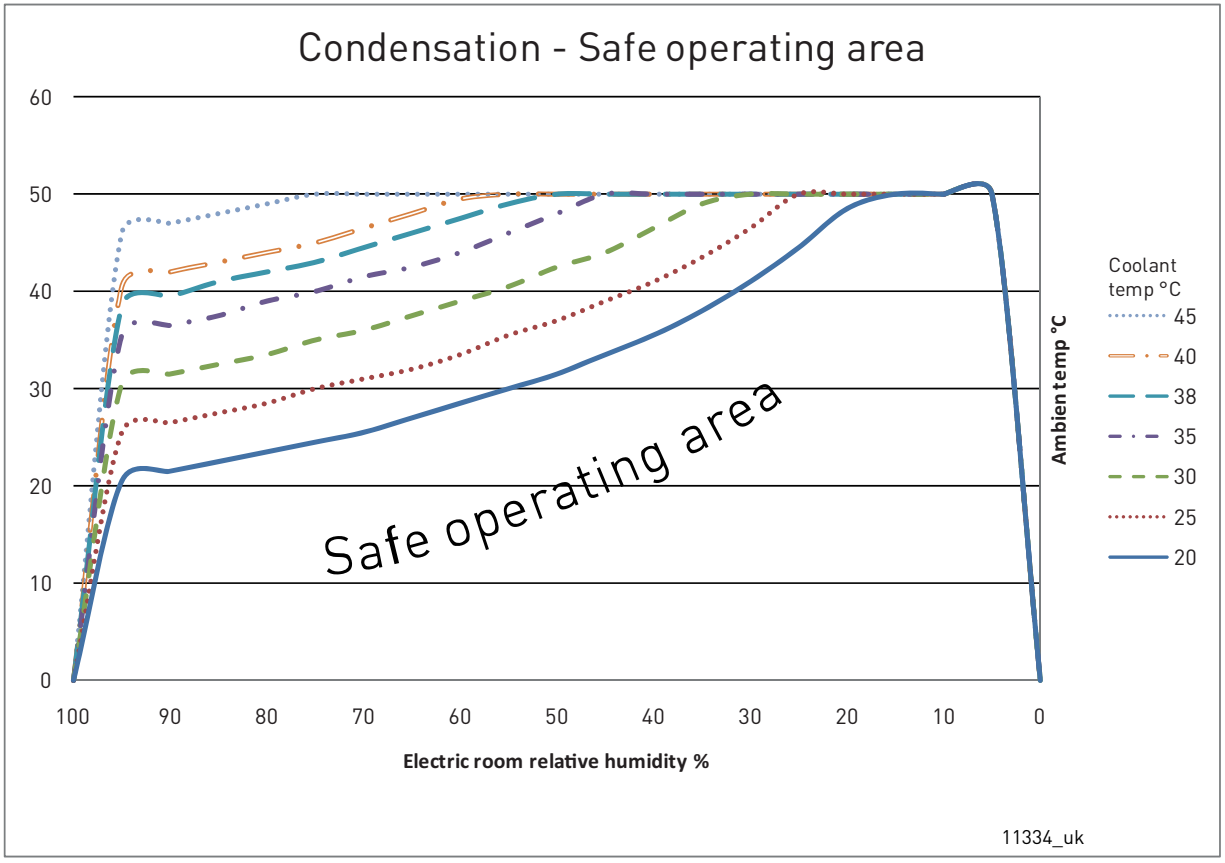

Figure 26. Safe operating conditions in relation to condensation

Example:

If the temperature of the electric room is 30 °C, the relative humidity is 40% and the temperature of the cooling liquid is 20 °C (the lowest curve in Figure 26), then the drive operating conditions are safe.

However, if the room temperature were to rise to 35 °C and the relative humidity to 60%, then the operating conditions of the drive would no longer be safe. In this case, to reach safe operating conditions, the air temperature should be cooled to 28 °C or lower. If it is not possible to lower the room temperature, then the temperature of the cooling liquid should be raised to at least 25 °C.

5.2.2 COOLING SYSTEM CONNECTIONS

The external cooling system must be connected to each one of the cooling elements of the inverter or AC drive.

NOTE! Do not connect the cooling elements in series.

The delivery comprises hoses (Technobel Noir Tricoflex, Art.no 135855) 1.5 m in length and 16 mm in diameter (CH5, CH6, CH7). The hoses are inserted in 1400-mm UL94V0 approved conduits (type HFX40). These hoses have screw type connectors with internal thread. The connection of the hoses is made on the aluminium adapter (external thread) of the cooling element. The customer end thread of the cooling hose is G1/2" male fixed including a Usit-R sealing. When you make the connection of the line hose, avoid any twisting of the hose on the element.



11335_00

Figure 27. Aluminium hose adapters



11336_00

Figure 28. External thread of hose adapter

For all other chasses (CH3, CH4), the standard delivery includes fast connectors of type 'Tema', series 1300 or 1900. The fast connectors are available as option also for CH5, CH6, CH7.

Table 21. Liquid connector types (all pressure values at nominal flow)

Chassis	Thread on element (internal) BSPP *.)	Connector type or hose type	Thread (cust.) BSPP **.)	Max. pressure (entire system)	Pressure loss, (fast connector + element)	Pressure loss, (hoses + element)
CH3	G3/8"	1300NE2 1/4"		6 bar	0.25 bar	
CH4	G3/8"	1300NE2 1/4"		6 bar	0.25 bar	
CH5	G3/4"	Technobel 16*23.5	G1/2"	6 bar		0.2 bar
CH6	G3/4"	Technobel 16*23.5	G1/2"	6 bar	See table below	See table below
CH7	G3/4"	Technobel 16*23.5	G1/2"	6 bar	See table below	See table below

*.) Use sealing (e.g. Usit-R Metal washer-rubber sealing) for this type of connection according to ISO standard 228-1

**.) Use sealant or sealing tape for this type of connection

5.2.2.1 Pressure losses

Table 22. Pressure losses; CH6x

CH6x with standard 1.5m hoses and optional fast connectors TEMA							
Volume flow rate (l/min)	Pressure loss; Tema, inflow (bar)	Pressure loss; inflow hose (bar)	Pressure loss; element (bar)	Pressure loss; outflow hose: (bar)	Pressure loss; Tema, outflow (bar)	Pressure loss total (inflow hose, element and outflow hose) (bar)	Pressure loss total (Tema, inflow and outflow hoses and element) (bar)
40.0	0.59	0.30	0.28	0.29	0.51	0.87	1.96
30.0	0.30	0.17	0.16	0.16	0.25	0.49	1.04
20.0	0.10	0.09	0.08	0.07	0.09	0.24	0.43
17.0	0.06	0.07	0.06	0.03	0.07	0.16	0.29

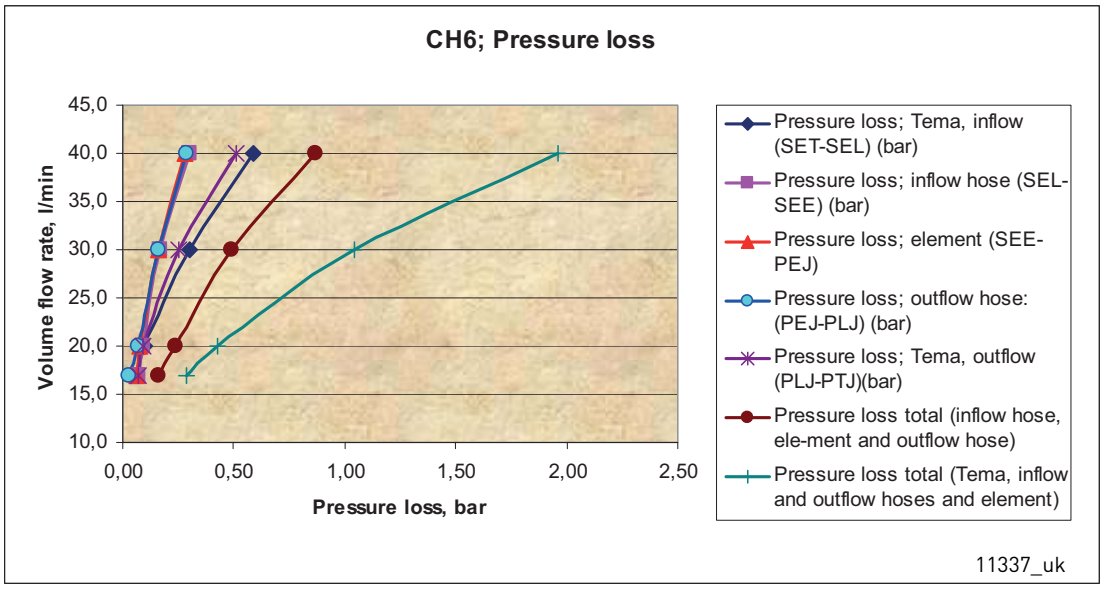

Figure 29. Pressure loss, CH6x

Table 23. Pressure losses; CH7x

CH7x (16) with standard 1.5m hoses and optional fast connectors TEMA							
Volume flow rate (l/min)	Pressure loss; Tema, inflow (bar)	Pressure loss; inflow hose (bar)	Pressure loss; element (bar)	Pressure loss; outflow hose: (bar)	Pressure loss; Tema, outflow (bar)	Pressure loss total (inflow hose, element and outflow hose) (bar)	Pressure loss total (Tema, inflow and outflow hoses and element) (bar)
40.0	0.61	0.30	0.28	0.28	0.50	0.87	1.97
30.0	0.31	0.17	0.17	0.16	0.26	0.50	1.07
20.0	0.11	0.09	0.08	0.07	0.10	0.24	0.44

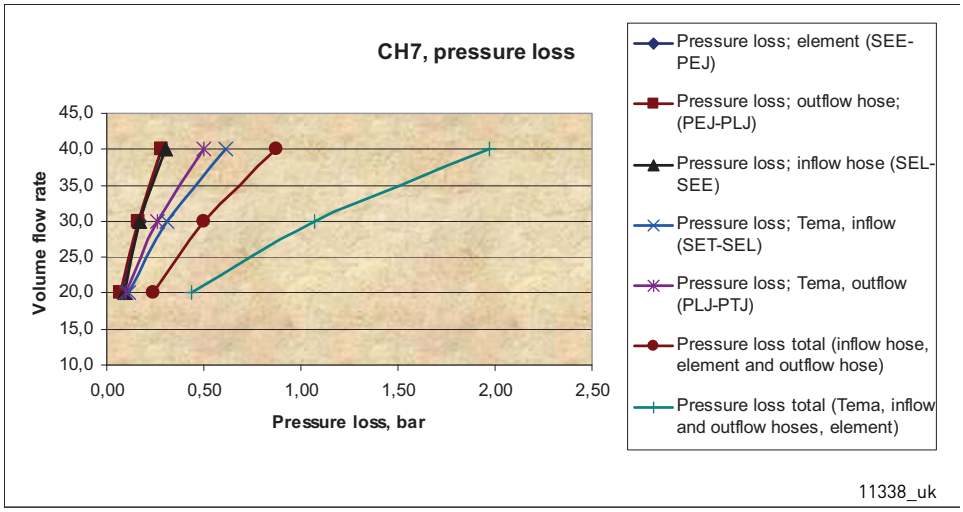

Figure 30. Pressure loss, CH7x

The liquid carrying hoses from the network to the cooling elements of the drive must not be electrically conductive. Risk of electrical shock and device damage! To avoid electrochemical corrosion, it is necessary to add an inhibitor (e.g. Cortec VpCI-649l in the cooling liquid.

The following main line hose materials are allowed for a liquid cooled drive including an aluminum heatsink:

- plastic (PVC)
- rubber (EPDM & NBR only)
- aluminium
- other stainless and acid-proof materials

The following main line hose materials are allowed for a liquid cooled drive including a nickel coated aluminum heatsink:

- plastic (PVC)
- rubber (EPDM & NBR only)
- copper
- aluminium
- brass
- other stainless and acid-proof material

The hoses must tolerate a peak pressure of 30 bar.

Connect the line hose to its counterpart (screw connector or fast connector) on the cooling element of the AC drive/inverter. The coolant inlet connector is the one closer to the mounting plate and the outlet connector the one closer to the face of the drive, see Figure 32. Due to high pressure in the line hose, it is recommended to equip the liquid line with a shut-off valve, which makes the connection easier. In order to prevent water from spraying in the installation room we also recommend to wrap e.g. linters around the connection on installing.

We also recommend to equip the pipe branches to the cooling elements with valves.

5.2.2.2 Installation of flow switch

As stated on page 57, we recommend the installation of flow supervision in the liquid cooling system. You can order the flow switch as an option. The specification of the flow switch as well as notes as concerns its installation are given below.

About the installation

We recommend to mount the flow switch on the inflow side of the system (see Figure 24). Pay attention to the direction of flow. The switch reaches the highest accuracy when it is mounted in horizontal position. If mounted vertically, the mechanical sensor is affected by the Earth's gravity which reduces the accuracy according to the data given in Table 24.

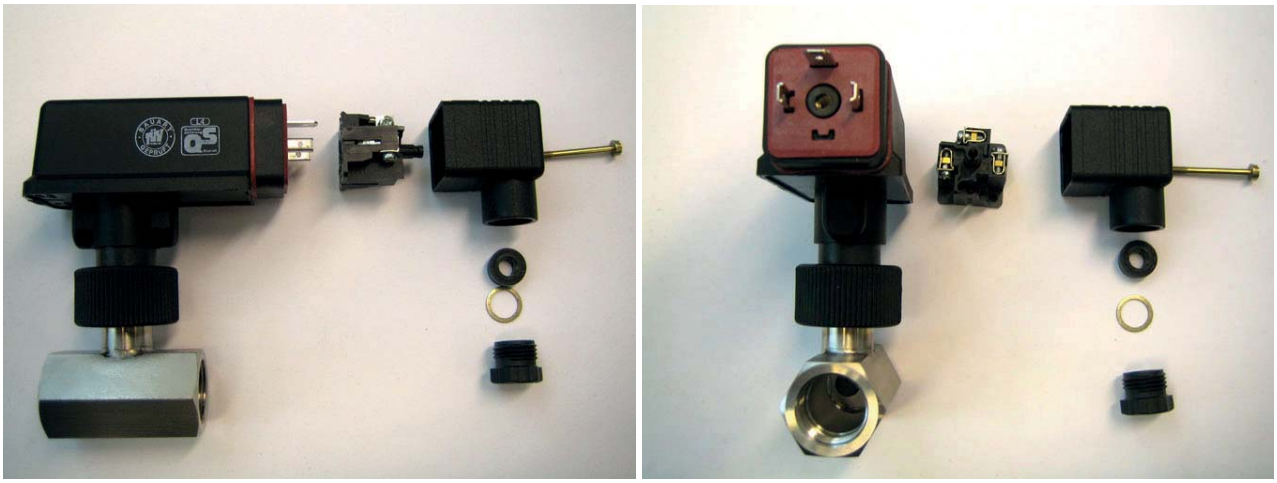

11339_00

Figure 31. Flow switch: Hose connection, fast connector (electrical), fast connector lock screw, cable seal and clamp

Table 24. Flow switch data

Hose connection	G1/2" female, internal thread ISO228-1
Closing	The switch closes if the flow exceeds 20 l/min.
Switching accuracy: **Horizontal installation** **Vertical installation**	–5...+15% (19...23 l/min) ±5% (19...21 l/min)

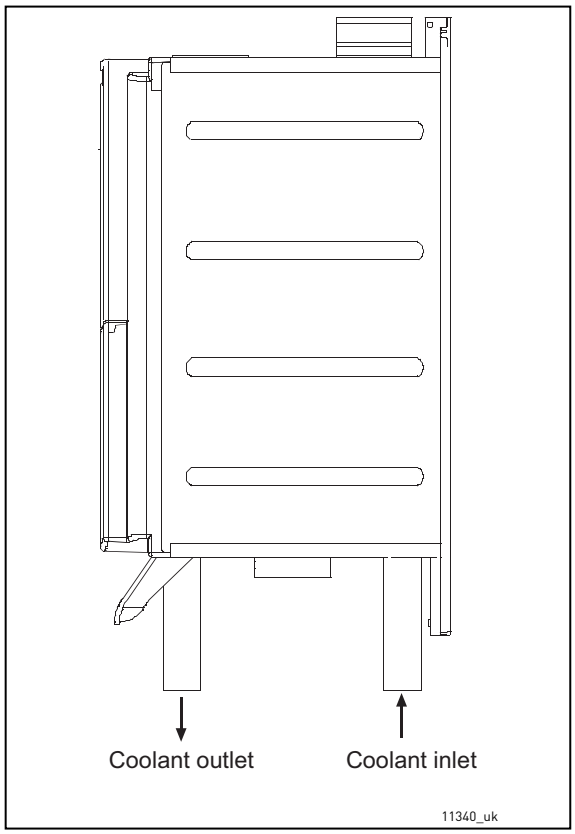

Figure 32. Direction of coolant circulation

5.3 DRIVE DERATING

The tables below state the maximum coolant temperatures for VACON® Liquid-Cooled drives at given switching frequencies. Drive derating is required if the maximum temperatures are exceeded.

NOTE! If the heatsink is nickel-coated you must allow for a 2-degree C derating of values in the tables below.[1)] (Temperatures given in parenthesis). This applies only to the two biggest drive sizes of each chassis!

Table 25. Max temperatures of coolant at switching frequency of 3.6 kHz

Supply voltage 400-500 VAC, switching frequency 3.6 kHz			
Chassis	**Type**	**Max coolant temperature [°C] Supply voltage 400 V**	**Max coolant temperature [°C] Supply voltage 500 V**
CH 61	NXP0385_5	47 (45) [1)]	43 (41) [1)]
CH62	NXP0730_5	40 (38) [1)]	37 (35) [1)]
CH63	NXP1150_5	38 (36) [1)]	36 (34) [1)]
CH64	NXP2060_5	44 (42) [1)]	42 (40) [1)]
CH64	NXP2300_5	42 (40) [1)]	40 (38) [1)]
CH72	NXP0730_5	42 (40) [1)]	40 (38) [1)]
CH74	NXP2060_5	37 (35) [1)]	34 (32) [1)]
CH74	NXP2300_5	37 (35) [1)]	34 (32) [1)]

Table 26. Max temperatures of coolant at switching frequency of 1.5 kHz

Supply voltage 400-500 VAC, switching frequency 1.5 kHz			
Chassis	**Type**	**Max coolant temperature [°C] Supply voltage 400 V**	**Max coolant temperature [°C] Supply voltage 500 V**
CH61	NXP0385_5	52 (50) [1)]	49 (47) [1)]
CH62	NXP0730_5	47 (45) [1)]	45 (43) [1)]
CH63	NXP1150_5	44 (42) [1)]	42 (40) [1)]
CH64	NXP2060_5	49 (47) [1)]	47 (45) [1)]
CH64	NXP2300_5	44 (42) [1)]	42 (40) [1)]
CH72	NXP0730_5	45 (43) [1)]	43 (41) [1)]
CH74	NXP2060_5	49 (47) [1)]	47 (45) [1)]
CH74	NXP2300_5	44 (42) [1)]	43 (41) [1)]

Table 27. Max temperatures of coolant at switching frequency of 3.6 kHz

Supply voltage 525-690 VAC, switching frequency 3.6 kHz			
Chassis	**Type**	**Max coolant temperature [°C] Supply voltage 525 V**	**Max coolant temperature [°C] Supply voltage 690 V**
CH61	NXP0261_6	45 (43) [1)]	39 (37) [1)]
CH62	NXP0502_6	41 (39) [1)]	33 (31) [1)]
CH63	NXP0750_6	42 (40) [1)]	36 (34) [1)]
CH64	NXP1500_6	41 (39) [1)]	34 (32) [1)]
CH72	NXP0502_6	38 (36) [1)]	32 (30) [1)]
CH74	NXP1500_6	41 (39) [1)]	34 (32) [1)]

Table 28. Max temperatures of coolant at switching frequency of 1.5 kHz

Supply voltage 525-690 VAC, switching frequency 1.5 kHz			
Chassis	**Type**	**Max coolant temperature [°C] Supply voltage 525 V**	**Max coolant temperature [°C] Supply voltage 690 V**
CH61	NXP0261_6	54 (52) [1)]	51 (49) [1)]
CH62	NXP0502_6	52 (50) [1)]	47 (45) [1)]
CH63	NXP0750_6	53 (51) [1)]	50 (48) [1)]
CH64	NXP1500_6	52 (50) [1)]	47 (45) [1)]
CH72	NXP0502_6	51 (49) [1)]	46 (44) [1)]
CH74	NXP1500_6	52 (50) [1)]	48 (46) [1)]

Table 29. Max temperatures of coolant

Supply voltage 400-690 VAC			
Chassis	**Type**	**Max coolant temperature [°C] Supply voltage 400 V**	**Max coolant temperature [°C] Supply voltage 690 V**
CH 60	NXN2000_6	43	43

Local contacts: http://drives.danfoss.com/danfoss-drives/local-contacts/

5.4 INPUT CHOKES

The input choke carries out several functions in the VACON® NX Liquid-Cooled AC drive. Connection of the input choke is necessary except if you have a component in your system that performs the same tasks (e.g. a transformer). The input choke is needed as an essential component for motor control, to protect the input and DC-link components against abrupt changes of current and voltage as well as to function as a protection against harmonics. In chasses with multiple parallel line rectifiers (CH74) AC-chokes are required to balance the line current between the rectifiers.

The input chokes are included in the standard delivery of VACON® Liquid-Cooled AC drives (not inverters). However, you can also order your AC drive without the choke.

The VACON® chokes listed below are meant for supply voltages of 400-500 V and 525-690 V.

Table 30. Input choke dimensioning, 6-pulse supply

AC drive types (400—500 VAC)	AC drive types (690 VAC)	Choke type	Thermal current [A]	Nominal inductance [0H] A/B*	Calculated loss [W]
0016...0022	0012...0023	CHK0023N6A0	23	1900	145
0031...0038	0031...0038	CHK0038N6A0	38	1100	170
0045...0061	0046...0062	CHK0062N6A0	62	700	210
0072...0087	0072...0087	CHK0087N6A0	87	480	250
0105...0140	0105...0140	CHK0145N6A0	145	290	380
0168...0261	0170...0261	CHK0261N6A0	261	139/187	460
0300...0385	0325...0385 0820...1180 1850...2340	CHK0400N6A0	400	90/126	610
0460...0520 1370 (CH74)	0416...0502 1300...1500 2700...3100	CHK0520N6A0	520	65/95	810
0590...0650 1640	0590...0650 1700	CHK0650N6A0	650	51/71	890
0730 2060	0750	CHK0750N6A0	750	45/61	970
0820 2300	-	CHK0820N6A0	820	39/53	1020
0920...1030	-	CHK1030N6A0	1030	30/41	1170
1150	-	CHK1150N6A0	1150	26/36	1420
2470...2950		CHK0520N6A0	520	65/95	810
3710		CHK0650N6A0	650	51/71	890
4140		CHK0750N6A0	750	45/61	970
AC drive types written bold italic require three (3) chokes of the designated kind per unit with 6-pulse supply.					

Table 31. Input choke dimensioning, 12-pulse supply

AC drive types (400—500 VAC)	AC drive types (690 VAC)	Choke type (2 chokes needed)	Thermal current [A]	Nominal inductance [0H] A/B*	Calculated loss [W]
0460...0520	0325...0502	CHK0261N6A0	261	139/187	460
0590...0730	0590...0750	CHK0400N6A0	400	90/120	610
0820...1030	0820...1030 1850	CHK0520N6A0	520	65/95	810
1150 2300 2470	1180...1300 2120...2340	CHK0650N6A0	650	51/71	890
1370 2950	1370 2700	CHK0750N6A0	750	45/61	970
1640	1500 3100	CHK0820N6A0	820	39/53	1020
2060 3710	1700	CHK1030N6A0	1030	30/41	1170
4140	-	CHK1150N6A0	1150	26/36	1420

AC drive types written bold italic require two (2) chokes of the designated kind per unit (totally 4).

*Inductances for different supply voltages; A = 400...480 Vac, B = 500...690 Vac.
See page 72.

5.4.1 INSTALLATION OF INPUT CHOKES

There are two types of input choke connection in VACON® NX Liquid-Cooled drives. The two smallest sizes (CH31, CH32; up to 61 A) have terminal block connection whereas bigger sizes use busbar connection. Examples of both connections and the choke dimensions below.

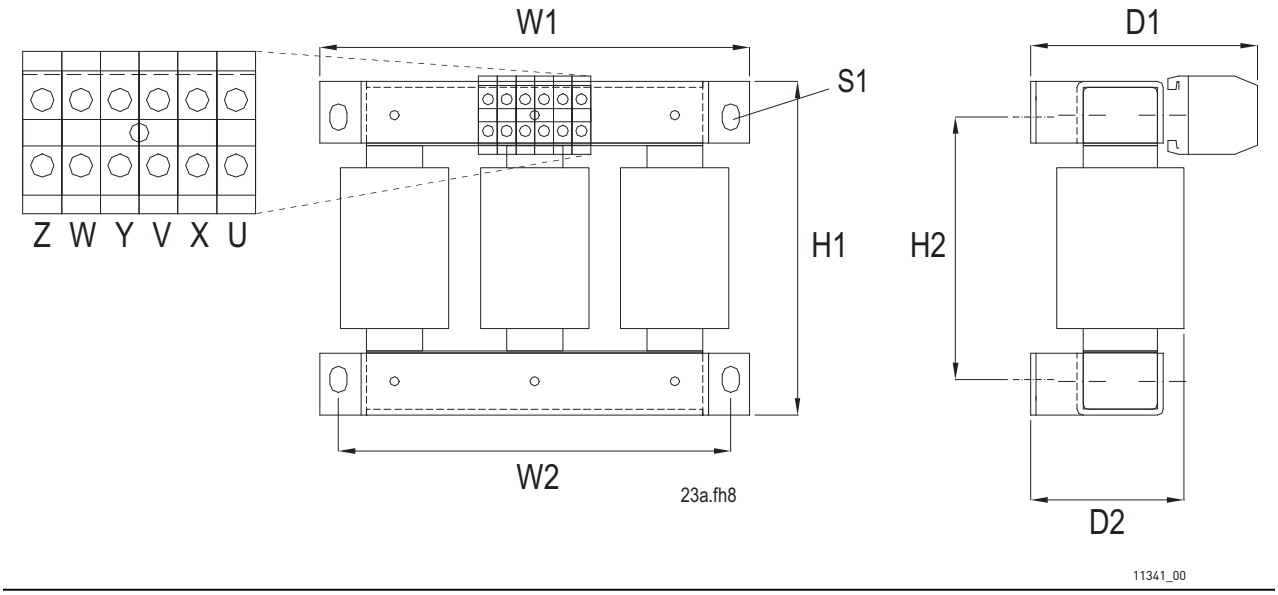

Figure 33. Example of input chokes for VACON® NX Liquid-Cooled. Sizes up to 62 A

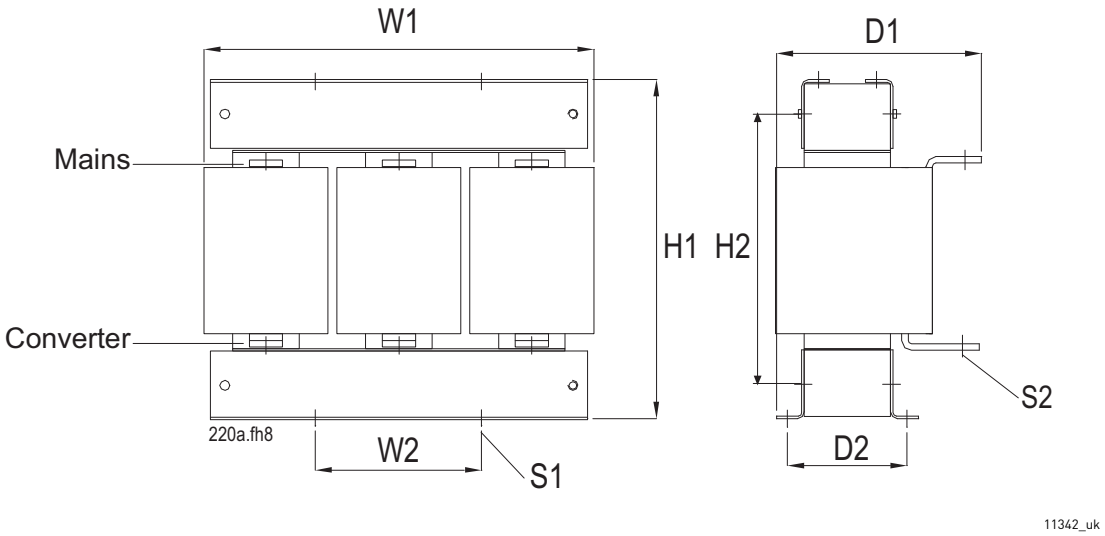

Figure 34. Example of input chokes for VACON® NX Liquid-Cooled. Sizes 87 A…145 A and 590 A

Table 32. Choke dimensions; Sizes 23 A…145 A and 590 A

Choke type	H1 [mm]	H2 [mm]	W1 [mm]	W2 [mm]	D1 [mm]	D2 [mm]	S1 [mm]	S2 [mm]	Weight [kg]
CHK0023N6A0	178	140	230	210	121	82	9*14 (4pcs)		10
CHK0038N6A0	209	163	270	250	NA	NA	9*14 (6pcs)		15
CHK0062N6A0	213	155	300	280	NA	NA	9*14 (4pcs)		20
CHK0087N6A0	232	174	300	280	170		9*14 (4pcs)	Ø9 (6 pcs)	26
CHK0145N6A0	292	234	300	280	185		9*14 (4pcs)	Ø9 (6 pcs)	37
CHK0590N6A0	519		394	316	272	165	10*35 (4pcs)	Ø11 (6 pcs)	125

Always connect the supply cables to the choke terminals marked with #1 (see Figure 35). Choose the AC drive connection according to the table below:

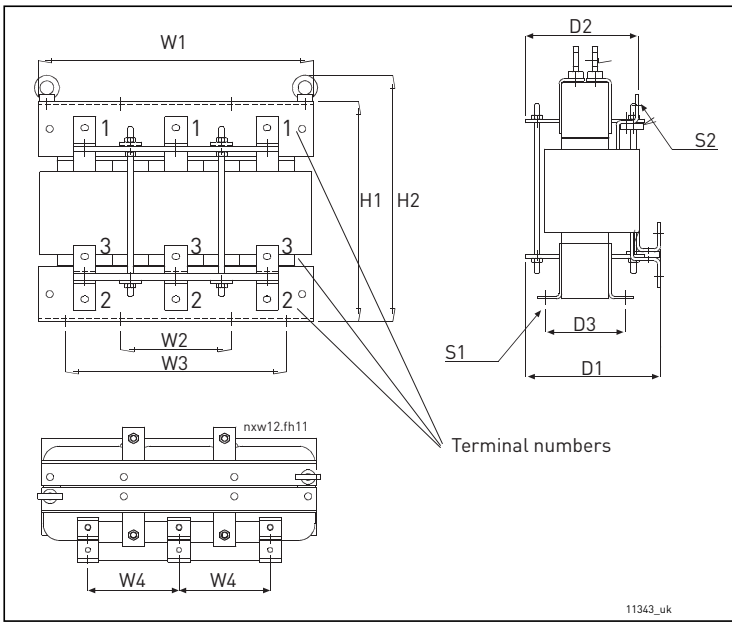

Table 33.

Supply voltage	AC drive connection (terminal no.)
400-480 Vac	2
500 Vac	3
525-690 Vac	3

Figure 35. Example of input chokes for VACON® NX Liquid-Cooled. Sizes 261 A...1150 A

Table 34. Choke dimensions; Sizes 261 A...1150 A

Choke type	H1 [mm]	H2 [mm]	W1 [mm]	W2 [mm]	W3 [mm]	W4 [mm]	D1 [mm]	D2 [mm]	D3 [mm]	S1	S2 Ø	Weight [kg]
CHK0261N6A0	319	357	354	150	275	120	230	206	108	9*14 (8 pcs)	9*14 (9 pcs)	53
CHK0400N6A0	383	421	350	150	275	120	262	238	140	9*14 (8 pcs)	11*15 (9 pcs)	84
CHK0520N6A0	399	446	497	200	400	165	244	204	145	Ø13 (8 pcs)	11*15 (9 pcs)	115
CHK0650N6A0	449	496	497	200	400	165	244	206	145	Ø13 (8 pcs)	11*15 (9 pcs)	130
CHK0750N6A0	489	527	497	200	400	165	273	231	170	Ø13 (8 pcs)	13*18 (9 pcs)	170
CHK0820N6A0	491	529	497	200	400	165	273	231	170	Ø13 (8 pcs)	13*18 (9 pcs)	170
CHK1030N6A0	630	677	497	200	400	165	307	241	170	Ø13 (8 pcs)	13*18 (36 pcs)	213
CHK1150N6A0	630	677	497	200	400	165	307	241	170	Ø13 (8 pcs)	13*18 (36 pcs)	213

If you have ordered the input chokes for VACON® NX Liquid-Cooled separately pay attention to the following instructions:

1. Protect the chokes from dripping water. You may even need to use plexiglass for protection because jets of water may occur when working with the connections.
2. Connection of cables:
   Types CHK0023N6A0, CHK0038N6A0, CHK0062N6A0 (chokes with terminal blocks)
   The terminals are marked with letters U,V, W and X,Y and Z in such an order, however, that terminals U and X, V and Y as well as W and Z form pairs of which one is an input and the other an output. Furthermore, terminals U,V and W must all be used as either input or output. The same applies to terminals X, Y and Z. See Figure 33.

Example: If you connect the mains cable of one phase to terminal X, the other two phases must be connected to Y and Z. Accordingly, the choke output cables are connected to their corresponding input pairs: phase 1 → U, phase 2 → V and phase 3 → W.

Other types (chokes with busbar connection)
Connect the mains cables to the upper busbar connectors (see Figure 34 and Figure 35) with bolts. The cables to the AC drive are bolted to the lower connectors. See Table 32 and Table 34 for bolt sizes.

6. ELECTRICAL CABLING AND CONNECTIONS

6.1 POWER UNIT

How the power connections of VACON® NX Liquid-Cooled units are implemented depends on the size of the unit. The smallest VACON® NX Liquid-Cooled unit (CH3) has terminal blocks for the connections. In all other units, the connection is established using cables and cable clips or bolting the busbars together.

The main circuit diagrams of each VACON® NX Liquid-Cooled drive chassis you will find in Appendix 2 on page 194.

6.1.1 POWER CONNECTIONS

Use cables with heat resistance of at least +90 °C. The cables and the fuses must be sized according to the drive nominal OUTPUT current that you can find on the rating plate. Sizing according to the output current is recommended because the drive input current never significantly exceeds the output current. Installation of cables according to UL regulations is presented in Chapter 6.1.6.

In chassis CH5 and greater, the field cables (both motor and mains) must be connected to a specific cable connection block (optional equipment). However, inside a switchgear, the cable connection can be made directly to the drive.

VACON® Liquid-Cooled NX_8 inverter units must be equipped with a du/dt- or sine-filter.

Table 41 shows the minimum sizes of the Cu-cables and the corresponding aR fuse sizes.

If the motor temperature protection of the drive (see VACON® NX All in One Application Manual) is used as an overload protection, the cable must be chosen accordingly. If three or more cables are used in parallel each cable requires a separate overload protection.

These instructions apply only to cases with one motor and one cable connection from the AC drive or inverter to the motor. In any other case, ask the factory for more information.

6.1.1.1 Mains cable

The mains cables of the size CH31 are connected to terminal blocks [see Figure 6] whereas busbar connection is used for greater sizes, see drawings in Chapter 5.1.2.2. Mains cable type for EMC level N in Table 35.

6.1.1.2 Motor cable

In order to avoid current sharing disbalance it is imperative to use symmetrical motor cables. We also recommends to always use shielded cable whenever possible.

The motor cables of the size CH31 are connected to terminal blocks (see Figure 6) whereas busbar connection is used for greater sizes, see drawings on on Chapter 5.1.2.2. Motor cable type for EMC level N in Table 35. Ask factory for more information on the use of ferrite cores with the motor cable in order to protect the motor bearings against motor bearing currents.

For information on control cables see Chapter 6.2.2.1 and Table 35.

Table 35. Cable types required to meet standards

Cable type	Level N/T
Mains cable	1
Motor cable	1
Control cable	4

1 = Power cable intended for fixed installation and the specific mains voltage. Symmetrical shielded cable recommended. (NKCABLES/MCMK or similar recommended)

4 = Screened cable equipped with compact low-impedance shield (NKCABLES /JAMAK, SAB/ÖZCuY-O or similar).

6.1.1.3 Motor cable data

Table 36. Motor cable sizes, 400—500 V

Chassis	Type	I_{th}	Motor cable Cu [mm²]	Terminal cable size		Max. number of cables/ Bolt size
				Main terminal [mm²], max.	Earth terminal [mm²]	
CH3	0016_5	16	3*2.5+2.5	50	1—10	(Terminal block)
CH3	0022_5	22	3*4+4	50	1—10	(Terminal block)
CH3	0031	31	3*6+6	50	1—10	(Terminal block)
CH3	0038_5 0045_5	38—45	3*10+10	50 Cu 50 Al	6—35	(Terminal block)
CH3	0061_5	61	3*16+16	50 Cu 50 Al	6—35	(Terminal block)
CH4	0072_5	72	3*25+16	50 Cu 50 Al	6—70	1/M8
CH4	0087_5	87	3*35+16	50 Cu 50 Al	6—70	1/M8
CH4	0105_5	105	3*50+25	50 Cu 50 Al	6—70	1/M8
CH4	0140_5	140	3*70+35	95 Cu/Al	25—95	1/M8
CH5	0168_5	168	3*95+50	185 Cu/Al	25—95	2/M10
CH5	0205_5	205	3*150+70	185 Cu/Al	25—95	2/M10
CH5	0261_5	261	3*185+95	185 Cu/Al	25—95	2/M10
CH61	0300_5	300	2*(3*120+70)	*	25—185	2/M12
CH61	0385_5	385	2*(3*120+70)	*	25—185	2/M12
CH62/72	0460_5	460	2*(3*150+70)	**	25—185	4/M12
CH62/72	0520_5	520	2*(3*185+95)	**	25—185	4/M12

Table 36. Motor cable sizes, 400—500 V

Chassis	Type	I_{th}	Motor cable Cu [mm²]	Terminal cable size		Max. number of cables/ Bolt size
				Main terminal [mm²], max.	Earth terminal [mm²]	
CH62/72	0590_5 0650_5	590 650	3*(3*150+70)	**	25—185	4/M12
CH62/72	0730_5	730	3*(3*150+70)	**	25—185	4/M12
CH63	0820_5	820	3*(3*185+95)	**	****	8/M12
CH63	0920_5	920	4*(3*185+95	**	****	8/M12
CH63	1030_5	1030	4*(3*185+95)	**	****	8/M12
CH63	1150_5	1150	5*(3*185+95)	**	***	8/M12
CH64	1370_5	1370	5*(3*185+95)	**	***	8/M12
CH64	1640_5	1640	6*(3*185+95)	**	***	8/M12
CH64	2060_5	2060	7*(3*185+95)	**	***	8/M12
CH64	2300_5	2300	8*(3*185+95)	**	***	8/M12
CH74[1)]	1370_5	1370	5*(3*185+95)	**	***	4/M12
CH74[1)]	1640_5	1640	6*(3*185+95)	**	***	4/M12
CH74[1)]	2060_5	2060	7*(3*185+95)	**	***	4/M12
CH74[1)]	2300_5	2300	8*(3*185+95)	**	***	4/M12

[1)] Due to insufficient number of terminal bolt connections for required amount of cables, the cabinet must be equipped with an external flexible cable connection block at both mains and motor ends if stiff cable type is used.

Units with 6-pulse supply

Note that all other sizes have 3 input terminals except for size CH74, which has 9 input terminals.

Units with 12-pulse supply

12-pulse supply can be used with drives of sizes CH72 and CH74. The number of input terminals for both is 6.

If 12-pulse supply is used, pay also attention to the fuse selection, see page 82 and page 83.

See the tightening torques of bolts in Table 40.

Table 37. Motor cable sizes, 525—690 V

Chassis	Type	I_{th}	Motor cable Cu [mm²]	Terminal cable size		Max. number of cables/ Bolt size
				Main terminal [mm²], max	Earth terminal [mm²]	
CH61	0170_6	170	3*95+50	185 Cu/Al	25—95	2/M12
CH61	0208_6	208	3*150+70	185 Cu/Al	25—95	2/M12
CH61	0261_6	261	3*185+95	185 Cu/Al 2	25—95	2/M12

Table 37. Motor cable sizes, 525—690 V

Chassis	Type	I_{th}	Motor cable Cu [mm²]	Terminal cable size		Max. number of cables/ Bolt size
				Main terminal [mm²], max	Earth terminal [mm²]	
CH62/72	0325_6	325	2*(3*95+50)	**	25—185	4/M12
CH62/72	0385_6	385	2*(3*120+70)	**	25—185	4/M12
CH62/72	0416_6	416	2*(3*150+70)	**	25—185	4/M12
CH62/72	0460_6	460	2*(3*185+95)	**	25—185	4/M12
CH62/72	0502_6	502	2*(3*185+95)	**	25—185	4/M12
CH63	0590_6	590	3*(3*150+70)	**	***	8/M12
CH63	0650_6	650	3*(3*150+70)	**	***	8/M12
CH63	0750_6	750	3*(3*185+95)	**	***	8/M12
CH74[1)]	0820_6	820	4*(3*150+70)	**	***	4/M12
CH74[1)]	0920_6	920	4*(3*185+95)	**	***	4/M12
CH74[1)]	1030_6	1030	4*(3*185+95)	**	***	4/M12
CH74[1)]	1180_6	1180	5*(3*185+95)	**	***	4/M12
CH74[1)]	1300_6	1300	5*(3*185+95)	**	***	4/M12
CH74[1)]	1500_6	1500	6*(3*185+95)	**	***	4/M12
CH74[1)]	1700_6	1700	6*(3*240+120)	**	***	4/M12

[1)]Due to insufficient number of terminal bolt connections for required amount of cables, the cabinet must be equipped with an external flexible cable connection block at both mains and motor ends if stiff cable type is used.

* = Number of bolt connections 2

** = Number of bolt connections 4

*** = Three grounding terminals per mounting plate, see Chapter 6.1.7.

**** = Two grounding terminals per mounting plate, see Chapter 6.1.7.

See the tightening torques of bolts in Table 40.

6.1.1.4 Mains cable data for AC drives

Table 38. Mains cable sizes for AC drives, 400—500 V

Chassis	Type	I_{th}	Mains cable Cu [mm²]	Terminal cable size		Max. number of cables/ Bolt size
				Main terminal [mm²], max	Earth terminal [mm²]	
CH3	0016_5	16	3*2.5+2.5	50	1—10	(Terminal block)
CH3	0022_5	22	3*4+4	50	1—10	(Terminal block)
CH3	0031	31	3*6+6	50	1—10	(Terminal block)
CH3	0038_5 0045_5	38—45	3*10+10	50 Cu 50 Al	6—35	(Terminal block)
CH3	0061_5	61	3*16+16	50 Cu 50 Al	6—35	(Terminal block)
CH4	0072_5	72	3*25+16	50 Cu 50 Al	6—70	1/M8
CH4	0087_5	87	3*35+16	50 Cu 50 Al	6—70	1/M8
CH4	0105_5	105	3*50+25	50 Cu 50 Al	6—70	1/M8
CH4	0140_5	140	3*70+35	95 Cu/Al	25—95	1/M8
CH5	0168_5	168	3*95+50	185 Cu/Al	25—95	2/M10
CH5	0205_5	205	3*150+70	185 Cu/Al	25—95	2/M10
CH5	0261_5	261	3*185+95	185 Cu/Al	25—95	2/M10
CH61	0300_5	300	2*(3*120+70)	300 Cu/Al	25—185	2/M12
CH61	0385_5	385	2*(3*120+70)	300 Cu/Al	25—185	2/M12
CH72/CH72	0460_5	460	2*(3*150+70)	300 Cu/Al	25—185	2 (or 4)/M12
CH72/CH72	0520_5	520	2*(3*185+95)	300 Cu/Al	25—185	2 (or 4)/M12
CH72	0590_5 0650_5	590 650	2*(3*240+120)	300 Cu/Al	25—185	2/M12
CH72	0590_5 0650_5 0730_5	590 650 730	4*(3*95+50)	300 Cu/Al	25—185	4/M12
CH72[1)]	0730_5	730	3*(3*150+70)	300 Cu/Al	25—185	2/M12
CH63[1)]	0820_5	820	3*(3*185+95)	300 Cu/Al	***	2/M12
CH63[1)]	0920_5 1030_5	920 1030	4*(3*185+95)	300 Cu/Al	***	2/M12
CH63[1)]	1150_5	1150	4*(3*240+120)	300 Cu/Al	***	2/M12
CH74/ CH74[1)]	1370_5	1370	6*(3*150+70)	300 Cu/Al	***	6 (or 4)/M12
CH74/ CH74[1)]	1640_5	1640	6*(3*185+95)	300 Cu/Al	***	6 (or 4)/M12
CH74[1)]	2060_5	2060	9*(3*150+70)	300 Cu/Al	***	6/M12

Table 38. Mains cable sizes for AC drives, 400—500 V

Chassis	Type	I_{th}	Mains cable Cu [mm²]	Terminal cable size		Max. number of cables/ Bolt size
				Main terminal [mm²], max	Earth terminal [mm²]	
CH74[1)]	2060_5	2060	8*(3*185+95)	300 Cu/Al	***	4/M12
CH74[1)]	2300_5	2300	9*(3*185+95)	300 Cu/Al	***	6/M12

[1)]Due to insufficient number of terminal bolt connections for required amount of cables, the cabinet must be equipped with an external flexible cable connection block at both mains and motor ends if stiff cable type is used.

Data in Italic refer to drives with 12-pulse supply.

Units with 6-pulse supply

Note that all other sizes have 3 input terminals except for size CH74, which has 9 input terminals. CH74 cables must be connected symmetrically between 3 parallel connected rectifiers in each phase.

Units with 12-pulse supply

12-pulse supply can be used with drives of sizes CH72 and CH74. The number of input terminals for both is 6.

If 12-pulse supply is used, pay also attention to the fuse selection, see page 82 and page 83.

See the tightening torques of bolts in Table 40.

Table 39. Mains cable sizes, 525—690 V

Chassis	Type	I_{th}	Mains cable Cu [mm²]	Terminal cable size		Max. number of cables/ Bolt size
				Main terminal [mm²], max.	Earth terminal [mm²]	
CH61	0170_6	170	3*95+50	185 Cu/Al	25—95	2/M12
CH61	0208_6	208	3*150+70	185 Cu/Al	25—95	2/M12
CH61	0261_6	261	3*185+95	185 Cu/Al 2	25—95	2/M12
CH72/CH72	0325_6	325	2*(3*95+50)	300 Cu/Al	25—185	2 (or 4)/M12
CH72/CH72	0385_6	385	2*(3*120+70)	300 Cu/Al	25—185	2 (or 4)/M12
CH72/CH72	0416_6	416	2*(3*150+70)	300 Cu/Al	25—185	2 (or 4)/M12
CH72/CH72	0460_6	460	2*(3*185+95)	300 Cu/Al	25—185	2 (or 4)/M12
CH72/CH72	0502_6	502	2*(3*185+95)	300 Cu/Al	25—185	2 (or 4)/M12
CH63	0590_6 0650_6	590 650	2*(3*240+120)	300 Cu/Al	****	2/M12
CH63[1)]	0750_6	750	3*(3*185+95)	300 Cu/Al	****	2/M12
CH74	0820_6	820	3*(3*185+95)	300 Cu/Al	***	6/M12
CH74	0820_6	820	4*(3*150+70)	300 Cu/Al	***	4/M12
CH74	0920_6	920	3*(3*240+120)	300 Cu/Al	***	6/M12
CH74	0920_6	920	4*(3*185+95)	300 Cu/Al	***	4/M12
CH74	1030_6	1030	6*(3*95+50)	300 Cu/Al	***	6/M12

Table 39. Mains cable sizes, 525—690 V

Chassis	Type	I_{th}	Mains cable Cu [mm²]	Terminal cable size		Max. number of cables/ Bolt size
				Main terminal [mm²], max.	Earth terminal [mm²]	
CH74	1030_6	1030	4*(3*185+95)	300 Cu/Al	***	4/M12
CH74	1180_6	1180	6*(3*120+95)	300 Cu/Al	***	6/M12
CH74	1180_6 1300_6	1180 1300	4*(3*240+120)	300 Cu/Al	***	4/M12
CH74	1300_6	1300	6*(3*150+95)	300 Cu/Al	***	6/M12
CH74	1500_6	1500	6*(3*185+95)	300 Cu/Al	***	6/M12
CH74[1)]	1500_6	1500	6*(3*185+95)	300 Cu/Al	***	4/M12
CH74	1700_6	1700	6*(3*240+120)	300 Cu/Al	***	6/M12
CH74[1)]	1700_6	1700	6*(3*240+120)	300 Cu/Al	***	4/M12

[1)]Due to insufficient number of terminal bolt connections for required amount of cables, the cabinet must be equipped with an external flexible cable connection block at both mains and motor ends if stiff cable type is used.

Data in Italic refer to drives with 12-pulse supply.

Units with 6-pulse supply

Note that all other sizes have 3 input terminals except for size CH74, which has 9 input terminals.

Units with 12-pulse supply

12-pulse supply can be used with drives of sizes CH72 and CH74. The number of input terminals for both is 6.

If 12-pulse supply is used, pay also attention to the fuse selection, see page 82 and page 83.

See the tightening torques of bolts in Table 40.

Table 40. Tightening torques of bolts

Bolt	Tightening torque [Nm]	Max. inward thread length [mm]
M8	20	10
M10	40	22
M12	70	22
Grounding bolt (see page 91)	13.5	-

We recommend a low-impedance grounding of the motor cable shield for better performance.

Because of several possible cable installations and environmental conditions, it is very important to consider local regulations and the IEC/EN standards.

6.1.1.5 Cable selection and unit installation in accordance with the UL standards

To meet the UL (Underwriters Laboratories) regulations, use a UL-approved copper cable with a minimum heat-resistance of +90 °C to meet the requirements.

Use Class 1 wire only.

The units are suitable for use on a circuit capable of delivering not more than 100,000 rms symmetrical amperes, 600 V maximum, when protected by J, L or T Class fuses.

Integral solid state short circuit protection does not provide branch circuit protection. Branch circuit protection must be provided in accordance with the National Electric Code and any additional local codes. Branch circuit protection provided by fuses only.

6.1.2 DRIVE PROTECTION – FUSES

In order to protect the drive from short-circuits and excessive loads, input line fuses must be used. The warranty becomes void if the drive is not equipped with approriate fuses.

Depending on the drive configuration, the following types of fuse protection are recommended:

AC drive with AC supply:

Always protect the drive with fast-acting input line fuses for short-circuit protection. Also pay attention to protection of cables!

Common DC bus:

- Inverter units: Choose fuse protection according to Table 43 and Table 44.
- Active Front End (AFE) units: Choose DC fuses according to Table 43 and Table 44; Appropriate fuses for the AC supply are listed in Table 62 and Table 63, see Chapter 10.
- Inverter units connected to AFE units: Choose fuses for AC supply according to Table 62 and Table 63; **NOTE!** Protect each inverter unit with fuses according to Table 43 and Table 44.

DC links interconnected (e.g. 2*CH74)

In case interconnection of DC links is required, contact the manufacturer.

Brake chopper unit

See Chapter 11.

6.1.3 FUSE SIZES

The fuse sizing in the tables below is based on Ferraz aR fuses. We primarily recommend you to use these fuses or corresponding Bussman aR fuses (see Appendix 3 on page 196). Sufficient protection against short-circuit cannot be guaranteed if other fuse types are used. Furthermore, equation of the fuse values given in the tables below with those of other fuse manufacturers is not allowed. In case you wish to use fuses of other fuse manufacturers, contact your nearest distributor.

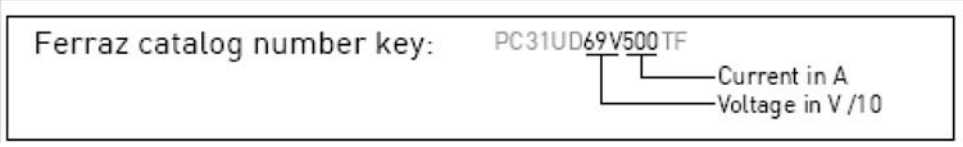

6.1.3.1 AC drives

Table 41. Fuse sizes for VACON® NX Liquid-Cooled (500 V) AC drives

Chassis	Type	I_{th} [A]	Fuse size	DIN43620	DIN43653	TTF	Fuse U_n [V]	Fuse I_n [A]	Qty. of fuses per drive 3~/6~
				aR fuse catalog nr.	aR fuse catalog nr.	aR fuse catalog nr.			
CH3	0016	16	DIN000	NH000UD69V40PV	DN00UB69V40L	PC30UD69V50TF	690	40/50[1]	3
CH3	0022	22	DIN000	NH000UD69V40PV	DN00UB69V40L	PC30UD69V50TF	690	40/50[1]	3
CH3	0031	31	DIN000	NH000UD69V63PV	DN00UB69V63L	PC30UD69V63TF	690	63	3
CH3	0038	38	DIN000	NH000UD69V100PV	DN00UB69V100L	PC30UD69V100TF	690	63	3
CH3	0045	45	DIN000	NH000UD69V100PV	DN00UB69V100L	PC30UD69V100TF	690	100	3
CH3	0061	61	DIN00	NH00UD69V125PV	DN00UB69V125L	PC30UD69V125TF	690	100	3
CH4	0072	72	DIN00	NH00UD69V200PV	DN00UB69V200L	PC30UD69V200TF	690	200	3
CH4	0087	87	DIN00	NH00UD69V200PV	DN00UB69V200L	PC30UD69V200TF	690	200	3
CH4	0105	105	DIN00	NH00UD69V200PV	DN00UB69V200L	PC30UD69V200TF	690	200	3
CH4	0140	140	DIN1	NH1UD69V315PV	PC30UD69V315A	PC30UD69V315TF	690	200	3
CH5	0168	168	DIN1	NH1UD69V315PV	PC30UD69V315A	PC30UD69V315TF	690	400	3
CH5	0205	205	DIN1	NH1UD69V400PV	PC30UD69V400A	PC30UD69V400TF	690	400	3
CH5	0261	261	DIN2	NH2UD69V500PV	PC31UD69V500A	PC31UD69V500TF	690	400	3
CH61	0300	300	DIN2	NH2UD69V700PV	PC31UD69V700A	PC31UD69V700TF	690	700	3
CH61	0385	385	DIN2	NH2UD69V700PV	PC31UD69V700A	PC31UD69V700TF	690	700	3
CH72	0460	460	DIN3	NH3UD69V1000PV	PC33UD69V1000A	PC33UD69V1000TF	690	1000	3
CH72[2]	*0460*	*460*	*DIN2*	*NH2UD69V500PV*	*PC31UD69V500A*	*PC31UD69V500TF*	*690*	*700*	*6*
CH72	0520	520	DIN3	NH3UD69V1000PV	PC33UD69V1000A	PC33UD69V1000TF	690	1000	3
CH72[2]	*0520*	*520*	*DIN2*	*NH2UD69V500PV*	*PC31UD69V500A*	*PC31UD69V500TF*	*690*	*700*	*6*
CH72	0590	590	DIN3	PC73UB69V1100PA	PC33UD69V1100A	PC33UD69V1100TF	690	1000	3
CH72[2]	*0590*	*590*	*DIN2*	*NH2UD69V700PV*	*PC31UD69V700A*	*PC31UD69V700TF*	*690*	*700*	*6*
CH72	0650	650	DIN3	PC73UB69V1250PA	PC33UD69V1250A	PC33UD69V1250TF	690	1250	3
CH72[2]	*0650*	*650*	*DIN2*	*NH2UD69V700PV*	*PC31UD69V700A*	*PC31UD69V700TF*	*690*	*700*	*6*
CH72	0730	730	DIN3	PC73UB69V1250PA	PC33UD69V1250A	PC33UD69V1250TF	690	1250	3
CH72[2]	*0730*	*730*	*DIN2*	*NH2UD69V700PV*	*PC31UD69V700A*	*PC31UD69V700TF*	*690*	*700*	*6*
CH63	0820	820	DIN3	NH3UD69V800PV	PC32UD69V800A	PC32UD69V800TF	690	800	6
CH63	0920	920	DIN3	NH3UD69V1000PV	PC33UD69V1000A	PC33UD69V1000TF	690	800	6
CH63	1030	1030	DIN3	NH3UD69V1000PV	PC33UD69V1000A	PC33UD69V1000TF	690	1000	6
CH63	1150	1150	DIN3	PC73UB69V1100PA	PC33UD69V1100A	PC33UD69V1100TF	690	1000	6
CH74	1370	1370	DIN3	NH3UD69V1000PV	PC33UD69V1000A	PC33UD69V1000TF	690	1000	9
CH74[2]	*1370*	*1370*	*DIN3*	*PC73UB69V1250PA*	*PC33UD69V1250A*	*PC73UB69V13CTF*	*690*	*800*	*6*
CH74	1640	1640	DIN3	NH3UD69V1000PV	PC33UD69V1000A	PC33UD69V1000TF	690	1000	9
CH74[2]	*1640*	*1640*	*DIN3*	*NH3UD69V800PV*	*PC32UD69V800A*	*PC32UD69V800TF*	*690*	*800*	*12*
CH74	2060	2060	DIN3	PC73UB69V1250PA	PC33UD69V1250A	PC33UD69V1250TF	690	1250	9
CH74[2]	*2060*	*2060*	*DIN3*	*NH3UD69V1000PV*	*PC33UD69V1000A*	*PC33UD69V1000TF*	*690*	*1000*	*12*
CH74	2300	2300	DIN3	PC73UB69V1250PA	PC33UD69V1250A	PC33UD69V1250TF	690	1250	9
CH74[2]	*2300*	*2300*	*DIN3*	*PC73UB69V1100PA*	*PC33UD69V1100A*	*PC33UD69V1100TF*	*690*	*1000*	*12*

[1] Fuse current (In) 50A for TTF aR fuse.

[2] *Data in Italic refer to drives with 12-pulse supply*

Table 42. Fuse sizes for VACON® NX Liquid-Cooled (690 V) AC drives

Chassis	Type	I_{th} [A]	Fuse size	DIN43620	DIN43653	TTF	Fuse U_n [V]	Fuse I_n [A]	Qty. of fuses per drive 3~/6~
				aR fuse part nr.	aR fuse part nr.	aR fuse part nr.			
CH61	0170	170	DIN1	NH1UD69V315PV	PC30UD69V315A	PC30UD69V315TF	690	315	3
CH61	0208	208	DIN1	NH1UD69V400PV	PC30UD69V400A	PC30UD69V400TF	690	400	3
CH61	0261	261	DIN2	NH2UD69V500PV	PC31UD69V500A	PC31UD69V500TF	690	500	3
CH72	0325	325	DIN2	NH2UD69V700PV	PC31UD69V700A	PC31UD69V700TF	690	700	3
CH72[1]	*0325*	*325*	*DIN1*	*NH1UD69V315PV*	*PC30UD69V315A*	*PC30UD69V315TF*	*690*	*315*	*6*
CH72	0385	385	DIN2	NH2UD69V700PV	PC31UD69V700A	PC31UD69V700TF	690	700	3
CH72[1]	*0385*	*385*	*DIN1*	*NH1UD69V400PV*	*PC30UD69V400A*	*PC30UD69V400TF*	*690*	*400*	*6*
CH72	0416	416	DIN3	NH3UD69V800PV	PC32UD69V800A	PC32UD69V800TF	690	800	3
CH72[1]	*0416*	*416*	*DIN1*	*NH1UD69V400PV*	*PC30UD69V400A*	*PC30UD69V400TF*	*690*	*400*	*6*
CH72	0460	460	DIN3	NH3UD69V1000PV	PC33UD69V1000A	PC33UD69V1000TF	690	1000	3
CH72[1]	*0460*	*460*	*DIN1*	*NH1UD69V400PV*	*PC30UD69V400A*	*PC30UD69V400TF*	*690*	*400*	*6*
CH72	0502	502	DIN3	NH3UD69V1000PV	PC33UD69V1000A	PC33UD69V1000TF	690	1000	3
CH72[1]	*0502*	*502*	*DIN2*	*NH2UD69V500PV*	*PC31UD69V500A*	*PC31UD69V500TF*	*690*	*500*	*6*
CH63	0590	590	DIN3	PC73UB69V1100PA	PC33UD69V1100A	PC33UD69V1100TF	690	1100	3
CH63	0650	650	DIN3	PC73UB69V1250PA	PC33UD69V1250A	PC33UD69V1250TF	690	1250	3
CH63	0750	750	DIN3	PC73UB69V1250PA	PC33UD69V1250A	PC33UD69V1250TF	690	1250	3
CH74	0820	820	DIN2	NH2UD69V500PV	PC31UD69V500A	PC31UD69V500TF	690	500	9
CH74[1]	*0820*	*820*	*DIN3*	*NH3UD69V800PV*	*PC32UD69V800A*	*PC32UD69V800TF*	*690*	*800*	*6*
CH74	0920	920	DIN2	NH2UD69V700PV	PC31UD69V700A	PC31UD69V700TF	690	700	9
CH74[1]	*0920*	*920*	*DIN3*	*NH3UD69V800PV*	*PC32UD69V800A*	*PC32UD69V800TF*	*690*	*800*	*6*
CH74	1030	1030	DIN2	NH2UD69V700PV	PC31UD69V700A	PC31UD69V700TF	690	700	9
CH74[1]	*1030*	*1030*	*DIN3*	*NH3UD69V1000PV*	*PC33UD69V1000A*	*PC33UD69V1000TF*	*690*	*1000*	*6*
CH74	1180	1180	DIN3	NH3UD69V800PV	PC32UD69V800A	PC32UD69V800TF	690	800	9
CH74[1]	*1180*	*1180*	*DIN3*	*PC73UB69V1100PA*	*PC33UD69V1100A*	*PC33UD69V1100TF*	*690*	*1100*	*6*
CH74	1300	1300	DIN3	NH3UD69V800PV	PC32UD69V800A	PC32UD69V800TF	690	800	9
CH74[1]	*1300*	*1300*	*DIN3*	*PC73UB69V1250PA*	*PC33UD69V1250A*	*PC33UD69V1250TF*	*690*	*1250*	*6*
CH74	1500	1500	DIN3	NH3UD69V1000PV	PC33UD69V1000A	PC33UD69V1000TF	690	1000	9
CH74[1]	*1500*	*1500*	*DIN3*	*PC73UB69V1250PA*	*PC33UD69V1250A*	*PC33UD69V1250TF*	*690*	*1250*	*6*
CH74	1700	1700	DIN3	NH3UD69V1000PV	PC33UD69V1000A	PC33UD69V1000TF	690	1000	9
CH74[1]	*1700*	*1700*	*DIN3*	*NH3UD69V800PV*	*PC32UD69V800A*	*PC32UD69V800TF*	*690*	*800*	*12*

[1] Data in Italic refer to drives with 12-pulse supply

Fuse information

The values in tables are based on max ambient temperature of +50 °C.

Fuse sizes can differ in the same chassis. Make sure that the Isc of the supply transformer is high enough to burn fuses fast enough.

Check the current rating of the fuse bases according to the input current of the drive.

The physical size of the fuse is chosen on the basis of the fuse current: Current > 400 amps (size 2 fuse or smaller), current < 400 amps (size 3 fuse). The aR fuses are thermally rated into switch fuse in 50 degrees ambient temperature.

Local contacts: http://drives.danfoss.com/danfoss-drives/local-contacts/

6.1.3.2 Fuse sizes, inverters

Each DC supply line must be equipped with an aR fuse according to the tables below.

Table 43. Fuse sizes for VACON® NX Liquid-Cooled (450—800 V) inverters

Chassis	Type	I_{th} [A]	DIN43620			"TTF" threaded end "7X" or size 83 with end contacts		"TTQF" threaded end size84 or "PLAF" 2x84 with end contacts		Fuse I_n [A]
			Fuse size	aR fuse part nr.	Fuses needed per drive	aR fuse part nr.	Fuses needed per drive	aR fuse part nr.	Fuses needed per drive	
CH3	0016	16	DIN0	PC70UD13C50PA	2	PC70UD13C50TF	2	-	-	50
CH3	0022	22	DIN0	PC70UD13C50PA	2	PC70UD13C50TF	2	-	-	50
CH3	0031	31	DIN0	PC70UD13C80PA	2	PC70UD13C63TF	2	-	-	80/63
CH3	0038	38	DIN0	PC70UD13C80PA	2	PC70UD13C80TF	2	-	-	125
CH3	0045	45	DIN0	PC70UD13C125PA	2	PC70UD13C125TF	2	-	-	125
CH3	0061	61	DIN0	PC70UD13C125PA	2	PC70UD13C125TF	2	-	-	125
CH4	72	72	DIN0	PC70UD13C200PA	2	PC70UD13C200TF	2	-	-	200
CH4	0087	87	DIN0	PC70UD13C200PA	2	PC70UD13C200TF	2	-	-	200
CH4	0105	105	DIN0	PC70UD13C200PA	2	PC70UD13C200TF	2	-	-	200
CH4	0140	140	DIN1	PC71UD13C315PA	2	PC71UD13C315TF	2	-	-	315
CH5	0168	168	DIN1	PC71UD13C315PA	2	PC71UD13C315TF	2	-	-	315
CH5	0205	205	DIN1	PC71UD13C400PA	2	PC71UD13C400TF	2	-	-	400
CH5	0261	261	DIN3	PC73UD13C500PA	2	PC73UD13C500TF	2	-	-	500
CH61	0300	300	DIN3	PC73UD13C630PA	2	PC73UD13C630TF	2	-	-	630
CH61	0385	385	DIN3	PC73UD11C800PA	2	PC73UD13C800TF	2	-	-	800
CH62	460	460	DIN3	PC73UD90V11CPA	2	PC73UD95V11CTF	2	-	-	1100
CH62	520	520	DIN3	PC73UD90V11CPA	2	PC73UD95V11CTF	2	-	-	1100
CH62	590	590	DIN3	PC73UD13C630PA	4	PC73UD95V11CTF	2	-	-	630/ 1100
CH62	650	650	DIN3	PC73UD13C630PA	4	PC83UD11C13CTF	2	-	-	630/ 1300
CH62	730	730	DIN3	PC73UD11C800PA	4	PC83UD11C13CTF	2	-	-	800/ 1300
CH63	0820	820	DIN3	PC73UD11C800PA	4	PC73UD13C800TF	4	PC84UD13 C15CTQ	2	800/ 1500
CH63	0920	920	DIN3	PC73UD90V11CPA	4	PC73UD95V11CTF	4	PC84UD12 C18CTQ	2	1100/ 1800
CH63	1030	1030	DIN3	PC73UD90V11CPA	4	PC73UD13C800TF	4	PC84UD11 C20CTQ	2	1100/ 800/ 2000
CH63	1150	1150	-	-	-	PC83UD11C13CTF	4	PC84UD11 C22CTQ	2	1300/ 2200
CH64	1370	1370	-	-	-	PC83UD11C14CTF	4	PC84UD10 C27CTQ	2	1400/ 2700

Table 43. Fuse sizes for VACON® NX Liquid-Cooled (450—800 V) inverters

Chassis	Type	I_{th} [A]	DIN43620			"TTF" threaded end "7X" or size 83 with end contacts		"TTQF" threaded end size84 or "PLAF" 2x84 with end contacts		Fuse I_n [A]
			Fuse size	aR fuse part nr.	Fuses needed per drive	aR fuse part nr.	Fuses needed per drive	aR fuse part nr.	Fuses needed per drive	
CH64	1640	1640	-	-	-	PC73UD13C800TF	8	PC87UD12C30CP50	2	800/3000
CH64	2060	2060	-	-	-	PC73UD95V11CTF	8	PC87UD11C38CP50	2	1100/3800
CH64	2300	2300	-	-	-	PC73UD95V11CTF	8	PC87UD10C44CP50	2	1100/4400

Table 44. Fuse sizes for VACON® NX Liquid-Cooled (640—1100 V) inverters

Chassis	Type	I_{th} [A]	DIN43620			"TTF" threaded end "7X" or size 83 with end contacts		"TTQF" threaded end size84 or "PLAF" 2x84 with end contacts		Fuse I_n [A]
			Fuse size	aR fuse part nr.	Fuses needed per drive	aR fuse part nr.	Fuses needed per drive	aR fuse part nr.	Fuses needed per drive	
CH61	0170	170	DIN1	PC71UD13C400PA	2	PC71UD13C400TF	2	-	-	400
CH61	0208	208	DIN1	PC71UD13C400PA	2	PC71UD13C400TF	2	-	-	400
CH61	0261	261	DIN1	PC73UD13C500PA	2	PC73UD13C500TF	2	-	-	500
CH62	0325	325	DIN3	PC73UD13C630PA	2	PC73UD13C630TF	2	-	-	630
CH62	0385	385	DIN3	PC73UD11C800PA	2	PC73UD13C800TF	2	-	-	800
CH62	0416	416	DIN3	PC73UD11C800PA	2	PC73UD13C800TF	2	-	-	800
CH62	0460	460	DIN3	PC73UD10C900PA	2	PC73UD12C900TF	2	-	-	900
CH62	0502	502	DIN3	PC73UD10C900PA	2	PC73UD12C900TF	2	-	-	900
CH63	0590	590	DIN3	PC73UD13C630PA	4	PC83UD12C11CTF	2	-	-	630/1100
CH63	0650	650	DIN3	PC73UD13C630PA	4	PC83UD11C13CTF	2	-	-	630/1300
CH63	0750	750	DIN3	PC73UD11C800PA	4	PC83UD11C14CTF	2	-	-	800/1400
CH64	0820	820	DIN3	PC73UD11C800PA	4	PC73UD13C800TF	4	PC84UD13C15CTQ	2	800/1500
CH64	0920	920	DIN3	PC73UD10C900PA	4	PC73UD12C900TF	4	PC84UD12C18CTQ	2	900/1800
CH64	1030	1030	-	-	-	PC83UD12C11CTF	4	PC84UD11C20CTQ	2	1100/2000

Table 44. Fuse sizes for VACON® NX Liquid-Cooled (640—1100 V) inverters

Chassis	Type	I_{th} [A]	DIN43620			"TTF" threaded end "7X" or size 83 with end contacts		"TTQF" threaded end size84 or "PLAF" 2x84 with end contacts		Fuse I_n [A]
			Fuse size	aR fuse part nr.	Fuses needed per drive	aR fuse part nr.	Fuses needed per drive	aR fuse part nr.	Fuses needed per drive	
CH64	1180	1180	-	-	-	PC83UD12C11CTF	4	PC84UD11C22CTQ	2	1100/2200
CH64	1300	1300	-	-	-	PC83UD11C13CTF	4	PC84UD11C24CTQ	2	1300/2400
CH64	1500	1500	-	-	-	PC83UD11C14CTF	4	PC87UD12C30CP50	2	1400/3000
CH64	1700	1700	-	-	-	PC73UD12C900TF	8	PC87UD11C34CP50	2	900/3400
CH64	1900	1900	-	-	-	PC73UD12C900TF	8	PC87UD11C34CP50	2	900/3400

Fuse information

The values in tables are based on max ambient temperature of +50 °C.

Fuse sizes can differ in the same chassis. Fuses can be chosen according to the biggest current rating of the chassis to minimize fuse variants. Make sure that the I_{sc} of the supply transformer is high enough to burn fuses fast enough.

Check the current rating of the fuse bases according to the input current of the drive.

The physical size of the fuse is chosen on the basis of the fuse current: Current < 250 amps (size 1 fuse), current > 250 amps (size 3 fuse).

The aR fuses are thermally rated into switch fuse in 50 degree ambient temperature.

6.1.4 CABLE INSTALLATION INSTRUCTIONS

1	Before starting the installation, check that none of the components of the AC drive is live.
2	VACON® NX Liquid-Cooled drive must always be installed in an enclosure, a separate cubicle or an electrical room. Always use a jib crane or similar lifting device to lift the drive. For safe and appropriate lifting, see Chapter 5.1.1.

3

Place the motor cables far enough from other cables:

- Avoid placing the motor cables in long parallel lines with other cables
- If the motor cables run in parallel with other cables, note the minimum distances between the motor cables and other cables given in table below.
- The given distances also apply between the motor cables and signal cables of other systems.

Distance between parallelly running cables [m]	Shielded cable [m]
0.3	≤ 50
1.0	≤ 200

- The maximum length of the motor cables is 300 m.
- The motor cables should cross other cables at an angle of 90 degrees.

4

If cable insulation checks are needed, see Chapter 6.1.10.

5

Connect the cables/busbars:

- For chassis CH5 and greater, an external flexible cable connection block must be used at both mains and motor ends if stiff cable type (EMCMK, MCMK) is used. See Chapter 6.1.1.
- Strip the cables at a sufficient distance if needed.
- Connect the mains, motor and control cables to their respective terminals (see Chapter 5.1.2). If busbar connection is used, bolt the bars and the terminals together. See bolt sizes on page 33 to page 44.
- Take the maximum terminal stresses shown in Figure 37 into account.
- For information on cable installation according to UL regulations see Chapter 6.1.9.
- Make sure that the control cable wires do not come in contact with the electronic components of the unit.
- If an external brake resistor (option) is used, connect its cable to the appropriate terminal.
- Check the connection of the earth cable to the motor and the AC driveterminals marked with ⏚.
- Connect the separate shield of the power cable to the earth terminals of the AC drive, motor and the supply centre.

6

Clamp the motor cables to the cabinet frame as instructed in Figure 36.

7

Liquid cooling connection:

The standard delivery of the VACON® NX Liquid-Cooled drive includes hoses on the cooling element 1.5 m in length and 15 mm in diameter. The hoses are inserted in 1400-mm UL94V0 approved conduits. Connect the line hose branch to its counterpart (screw or fast connector) on the of the VACON® Liquid-Cooled drive.

Due to high pressure in the line hose, it is recommended to equip the liquid line with a shut-off valve, which makes the connection easier. In order to prevent water from spraying in the installation room we also recommend to wrap e.g. linters around the connection on installing. For more information on the liquid connection, see Chapter 5.2.2.

When the installation in the enclosure is completed the liquid pump can be started. See Commissioning of the AC drive on page 137.

NOTE! Do not switch on the power before ensuring the proper functioning of the liquid cooling system.

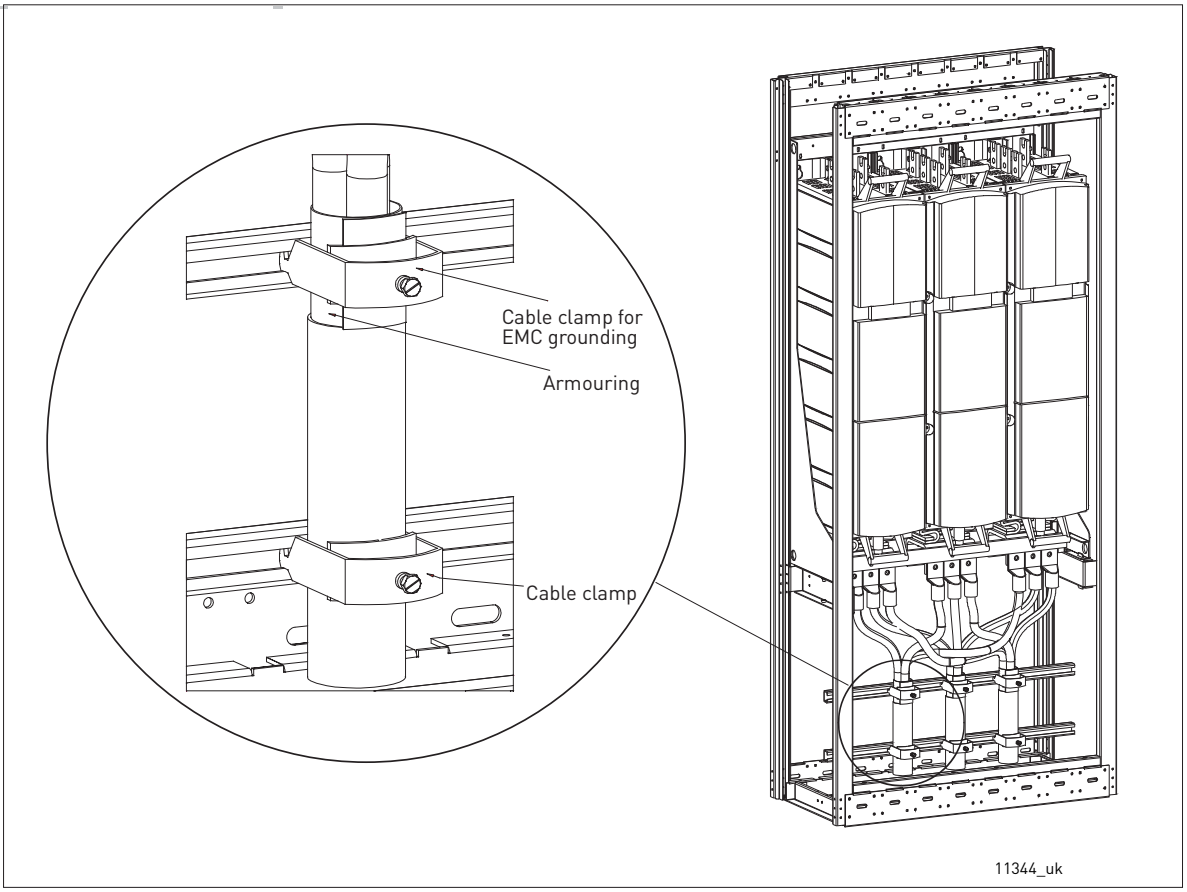

Figure 36. Clamping the motor cables to cabinet frame

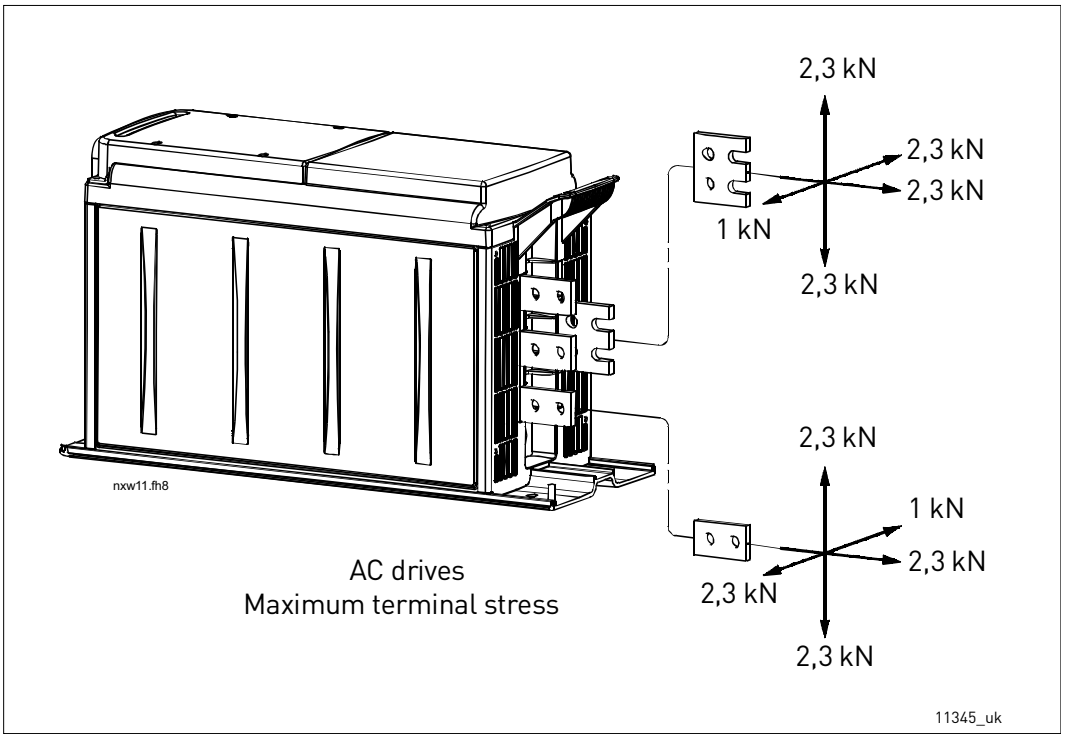

Figure 37. Maximum terminal stresses

6.1.5 SUPPLY BUSBARS FOR INVERTER UNITS

In order to avoid excessive terminal stresses on busbar terminals on inverter units with DC-supply on top (CH61...CH64), use flexible busbar connection. See figure below. The maximum terminal stresses are shown in Figure 37.

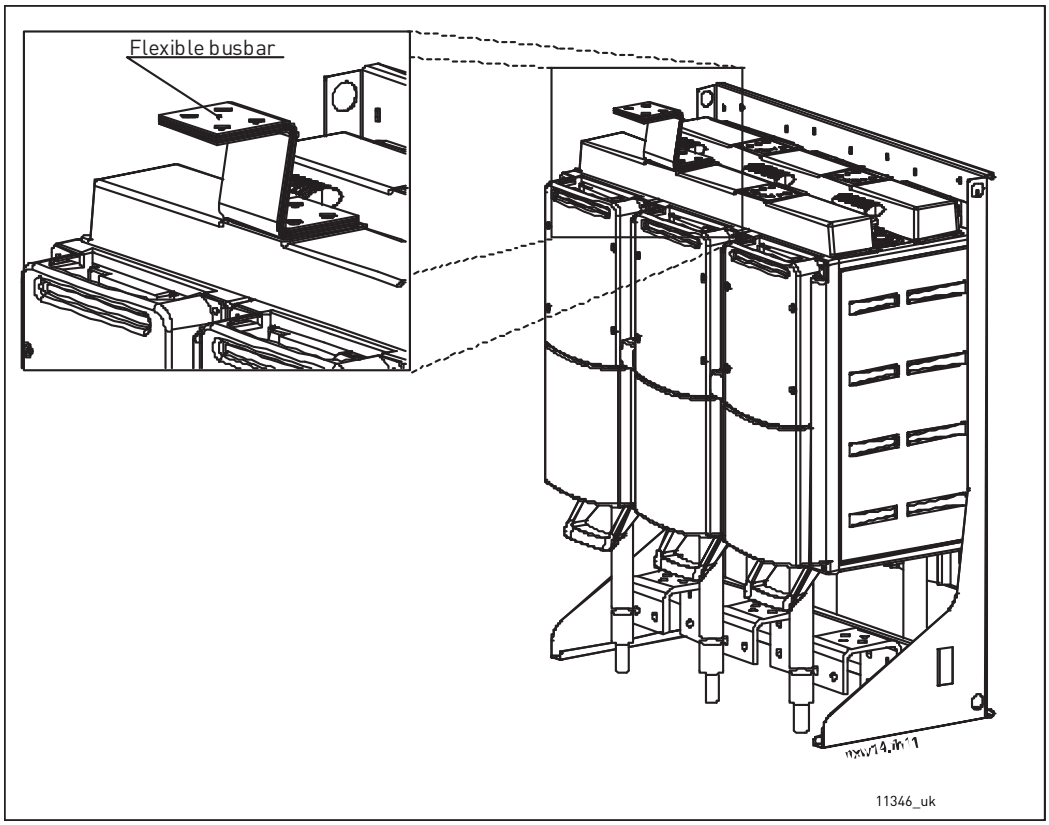

Figure 38. Mounting of flexible busbar

6.1.6 INSTALLATION SPACE

Enough free space must be left above and below the AC drive/inverter to ensure practical and appropriate electrical and cooling connections. The minimum dimensions are given in the table below. The space left and right to the drive may be 0 mm.

Table 45. Installation space

Chassis	A [mm]	B [mm]
CH3	100	150
CH4	100	200
CH5	100	200
CH61	100	300
CH62	100	400*
CH63	200	400*
CH64	200	500*
CH72	200	400*
CH74	200	500*

*Distance to the cable connection block. Additional space must be reserved for possibly used ferrite rings. See Chapter 6.1.1.2.

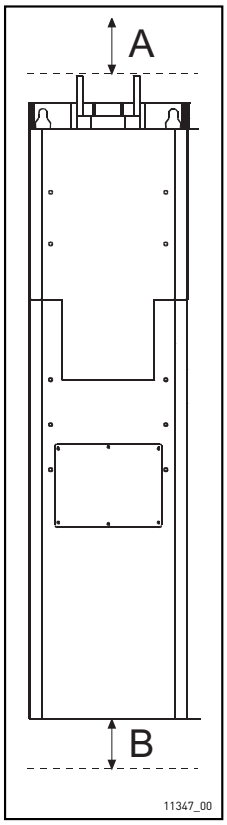

6.1.7 GROUNDING OF POWER UNIT

The mains cables are connected to the protective earth of the switchgear enclosure.

We recommend to connect the motor cables to the common PE of the cabinet/cabinet system.

For grounding of the drive itself, use the grounding terminal on the drive mounting plate (see Figure 39) and tighten the grounding bolt to 13.5 Nm.

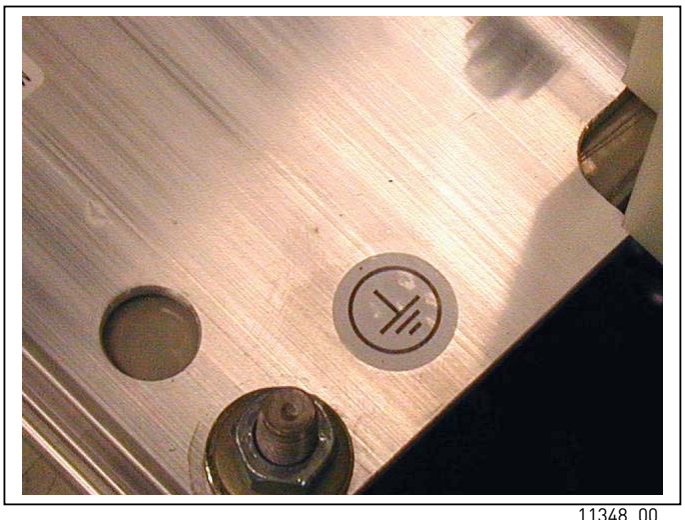

Figure 39. Grounding terminal on mounting plate

6.1.8 INSTALLATION OF FERRITE RINGS (OPTION) ON THE MOTOR CABLE

Slip only the phase conductors through the window; leave the cable screen below and outside the rings, see Figure 40. Separate the PE conductor. In case of parallel motor cables, reserve an equal amount of ferrite rings for each cable and feed all the phase conductors of one cable through one set of rings. The delivery includes fixed sets of ferrite rings.

When ferrite rings are used to attenuate the risk of bearing damages, the number of ferrites has to be 6...10 for a single motor cable and 10 per cable when the motor is supplied with parallel cables.

NOTE! The ferrite rings are only additional protection. The basic protection against bearing currents is an insulated bearing.

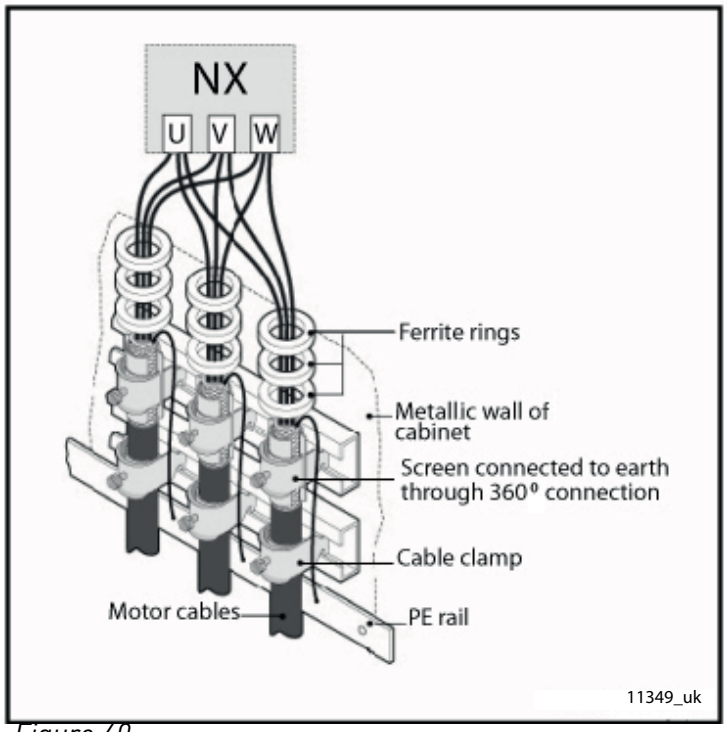

Figure 40. Installation of ferrite rings

6.1.9 CABLE INSTALLATION AND THE UL STANDARDS

To meet the UL (Underwriters Laboratories) regulations, a UL-approved copper cable with a minimum heat-resistance of 90 °C must be used.

Use Class 1 wire only.

The units are suitable for use on a circuit capable of delivering not more than 100,000 rms symmetrical amperes, 600 V maximum.

The tightening torques of the terminals are given in Table 40.

6.1.10 CABLE AND MOTOR INSULATION CHECKS

Motor cable insulation checks

1. Disconnect the motor cable from terminals U, V and W of the AC drive and from the motor. Measure the insulation resistance of the motor cable between each phase conductor as well as between each phase conductor and the protective ground conductor.

Mains cable insulation checks

2. Disconnect the mains cable from terminals L1, L2 and L3 of the AC drive and from the mains. Measure the insulation resistance of the mains cable between each phase conductor as well as between each phase conductor and the protective ground conductor.

The insulation resistance must be at least 1...2 MΩ.

Motor insulation checks

3. Disconnect the motor cable from the motor and open the bridging connections in the motor connection box. Measure the insulation resistance of each motor winding. The measurement voltage must equal at least the motor nominal voltage but not exceed 1000 V. The insulation resistance must be at least 1...2 MΩ.

6.2 CONTROL UNIT

The control unit of VACON® NX Liquid-Cooled AC drive/inverter is installed into a mounting box. It contains the control board and additional boards (see Figure 41 and Figure 42) connected to the five slot connectors (A to E) of the control board. The control unit and the ASIC of the power unit are connected through cables (and an adapter board). For more information, see page 108.

The mounting box with the control unit is mounted inside an enclosure. See the mounting instructions on page 103.

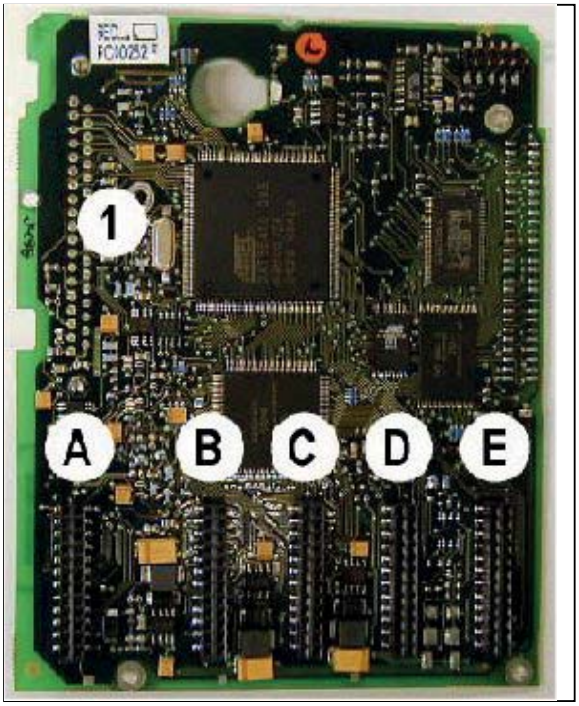

Figure 41. VACON® NX control board

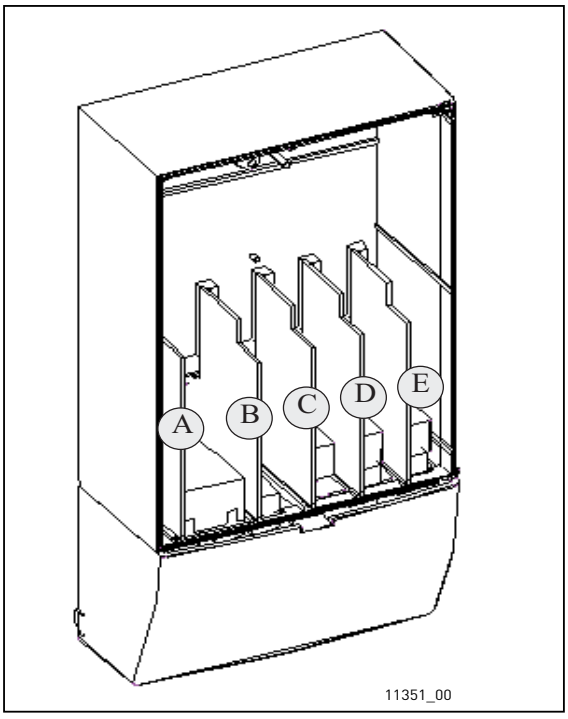

Figure 42. Basic and option board connections on the control board

Usually, when the AC drive is delivered from the factory, the control unit includes at least the standard compilation of two basic boards (I/O board and relay board) which are normally installed in slots A and B. On the next pages you will find the arrangement of the control I/O and the relay terminals of the two basic boards, the general wiring diagram and the control signal descriptions. The I/O boards mounted at the factory are indicated in the type code.

The control board can be powered externally (+24 VDC, ±10%) by connecting the external power source to the control unit. This voltage is sufficient for parameter setting and for keeping the fieldbus active.

NOTE! The control board of NX_8 (voltage class 8) AFE, INU or BCU units must always be powered externally with a +24 VDC ±10% power source.

The preferred solution is to connect the external +24 VDC power supply to the fiber adapter board terminals X3:1 (24 VDC) & X3:2 (GND) or star coupler board terminals X4:25 (24VDC)& X4:26 (GND), see pictures below.

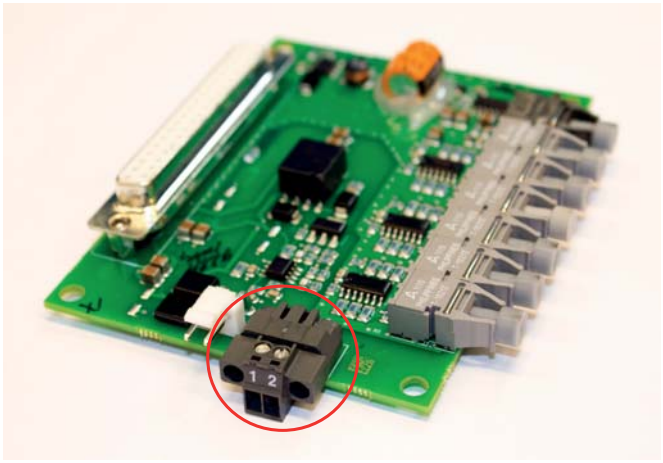

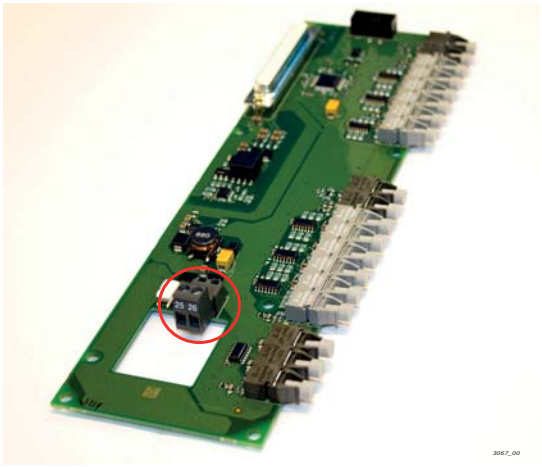

The control board can also be powered externally (+24 V, ±10%) by connecting the external power source to either of the bidirectional terminal #6 or #12, see page 98.

NOTE! If the 24 V inputs of several AC drives are parallelly connected we recommend to use a diode in terminal #6 (or #12) in order to avoid the current to flow in opposite direction. This might damage the control board. See picture below.

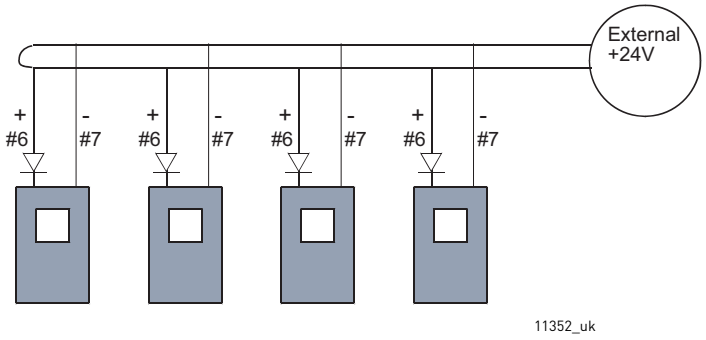

6.2.1 CONTROL BOARD POWER-UP

The control board can be powered (+24 V) in two different ways: either 1) directly from the power board ASIC, terminal X10 or/and 2) externally using the customer's own power source. The two ways of supplying the board can be used simultaneously. This voltage is sufficient for parameter setting and for keeping the fieldbus active.

By factory default, the control unit is powered using the terminal X10 on the power board. However, if an external supply is used to power up the control unit, a load resistor must be connected to terminal X10 on the power board. This applies to all chassis ≥ CH61.

6.2.2 CONTROL CONNECTIONS

The basic control connections for boards A1 and A2 are shown in Chapter 6.2.3.

The signal descriptions are presented in VACON® NX All in One Application Manual.

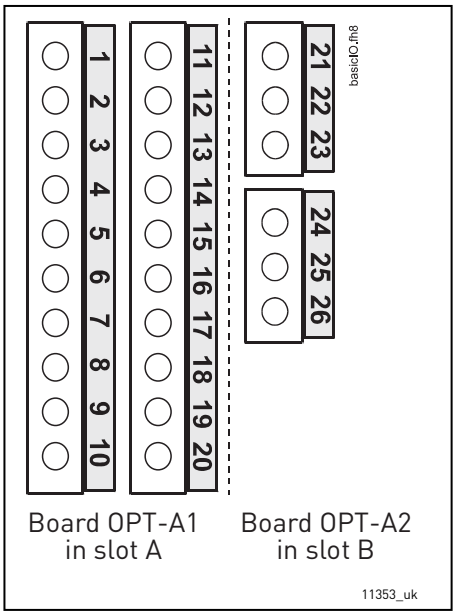

Figure 43. The I/O terminals of the two basic boards

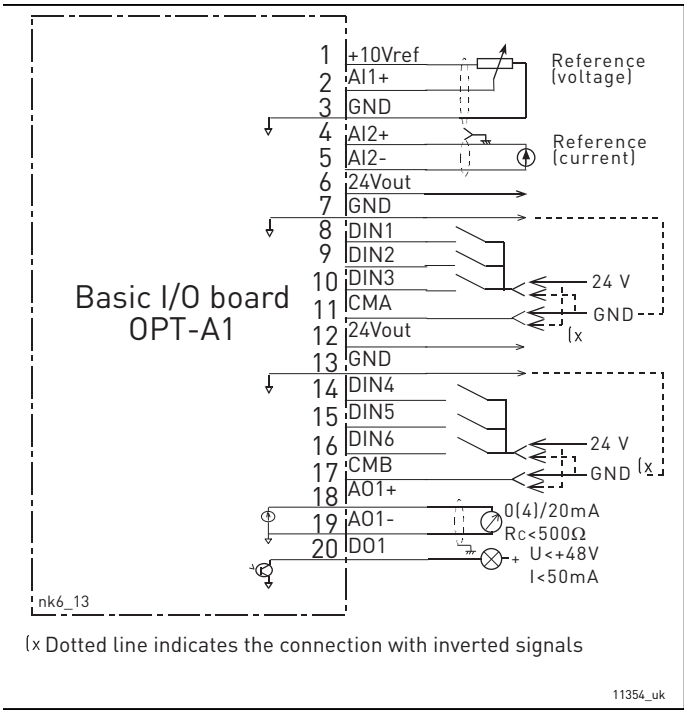

Figure 44. General wiring diagram of the basic I/O board (OPT-A1)

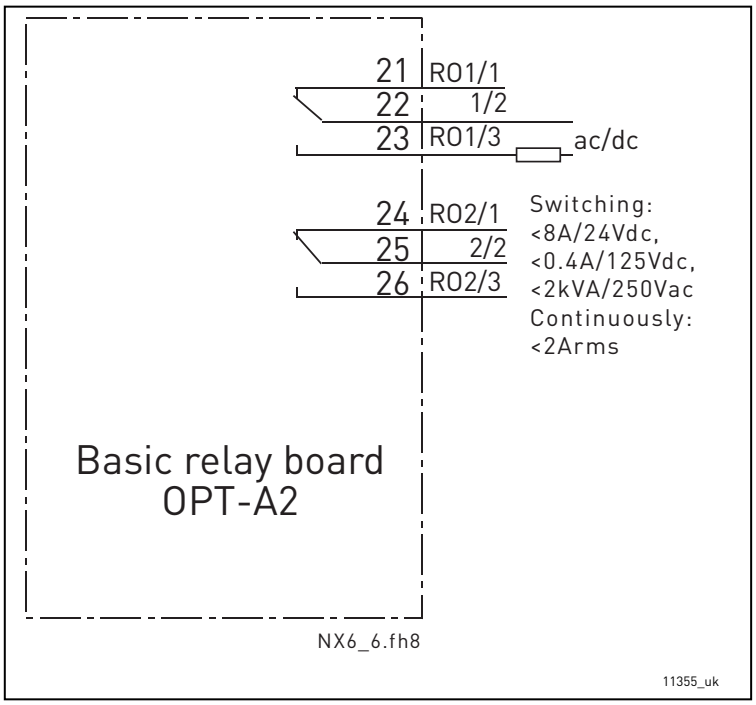

Figure 45. General wiring diagram of the basic relay board (OPT-A2)

6.2.2.1 Control cables

The control cables must be at least 0.5 mm^2 screened multicore cables, see Table 35. The maximumterminal wire size is 2.5 mm^2 for the relay terminals and 1.5 mm^2 for other terminals.

6.2.2.2 Galvanic isolation barriers

The control connections are isolated from the mains potential and the GND terminals are permanently connected to ground. See Figure 46.
The digital inputs are galvanically isolated from the I/O ground. The relay outputs are additionally double-isolated from each other at 300 VAC (EN-50178).

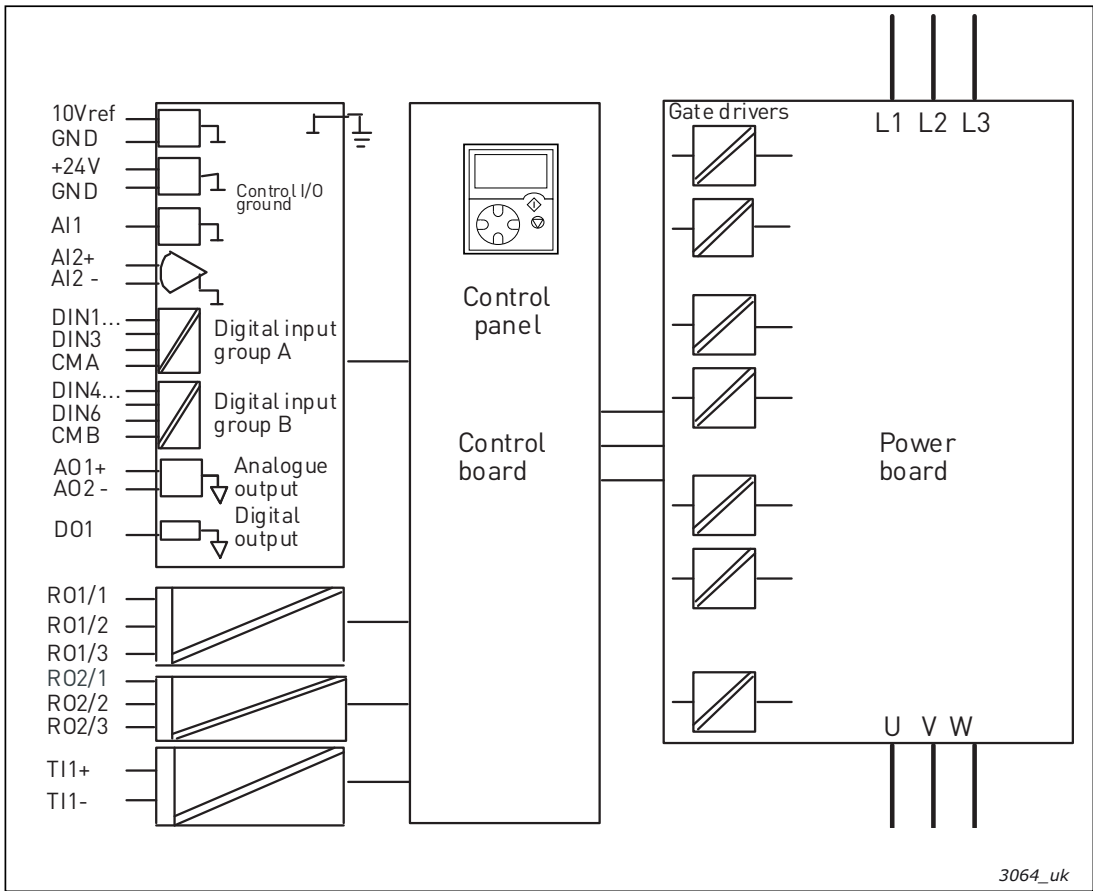

Figure 46. Galvanic isolation barriers

6.2.3 CONTROL TERMINAL SIGNALS

Table 46. Control I/O terminal signals

Terminal		Signal	Technical information
OPT-A1			
1	+10 Vref	Reference voltage	Maximum current 10 mA
2	AI1+	Analogue input, voltage or current	Selection V or mA with jumper block X1 (see page 102): Default:0– +10 V (Ri = 200 kΩ) (-10 V.....+10 V Joy-stick control, selected with a jumper) 0– 20 mA (Ri = 250 Ω)
3	GND/AI1–	Analogue input common	Differential input if not connected to ground; Allows ±20 V differential mode voltage to GND
4	AI2+	Analogue input, voltage or current	Selection V or mA with jumper block X2 (see page 102): Default:0– 20 mA (Ri = 250 Ω) 0– +10 V (Ri = 200 kΩ) (-10 V.....+10 V Joy-stick control, selected with a jumper)

Table 46. Control I/O terminal signals

Terminal		Signal	Technical information	
5	GND/AI2–	Analogue input common	Differential input if not connected to ground; Allows ±20 V differential mode voltage to GND	
6	24 V_{out} (bidirectional)	24 V auxiliary voltage	±15%, maximum current 250 mA Can also be used as external power backup for the control unit (and fieldbus)	
7	GND	I/O ground	Ground for reference and controls	
8	DIN1	Digital input 1	R_i = min. 5 kΩ 18...30 V = "1"	
9	DIN2	Digital input 2		
10	DIN3	Digital input 3		
11	CMA	Digital input common A for DIN1, DIN2 and DIN3.	Must be connected to GND or 24 V of I/O terminal or to external 24 V or GND Selection with jumper block X3 (see page 102):	
12	24 V_{out} (bidirectional)	24 V auxiliary voltage	Same as terminal #6	
13	GND	I/O ground	Same as terminal #7	
14	DIB4	Digital input 4	R_i = min. 5 kΩ	
15	DIB5	Digital input 5		
16	DIB6	Digital input 6		
17	CMB	Digital input common B for DIB4, DIB5 and DIB6	Must be connected to GND or 24V of I/O terminal or to external 24 V or GND Selection with jumper block X3 (see page 102):	
18	AO1+	Analogue signal (+output)	Output signal range: Current 0(4)–20 mA, R_L max 500 Ω or Voltage 0—10 V, R_L >1 kΩ Selection with jumper block X6 (see page 102):	
19	AO1–	Analogue output common		
20	DO1	Open collector output	Maximum U_{in} = 48 VDC Maximum current = 50 mA	
OPT-A2				
21	RO1/1	Relay output 1	Max. switching voltage	250 VAC, 125 VDC
22	RO1/2		Max. switching current	8 A/24 VDC, 0.4 A/250 VDC
23	RO1/3		Min. switching load	5 V/10 mA
24	RO2/1	Relay output 2	Max. switching voltage	250 VAC, 125 VDC
25	RO2/2		Max. switching current	8 A/24 VDC, 0.4 A/250 VDC
26	RO2/3		Min. switching load	5 V/10 mA

6.2.3.1 Digital input signal inversions

The active signal level depends on which potential the common inputs CMA and CMB (terminals 11 and 17) are connected to. The alternatives are either +24 V or ground (0 V). See Figure 47.

The 24-volt control voltage and the ground for the digital inputs and the common inputs (CMA, CMB) can be either internal or external.

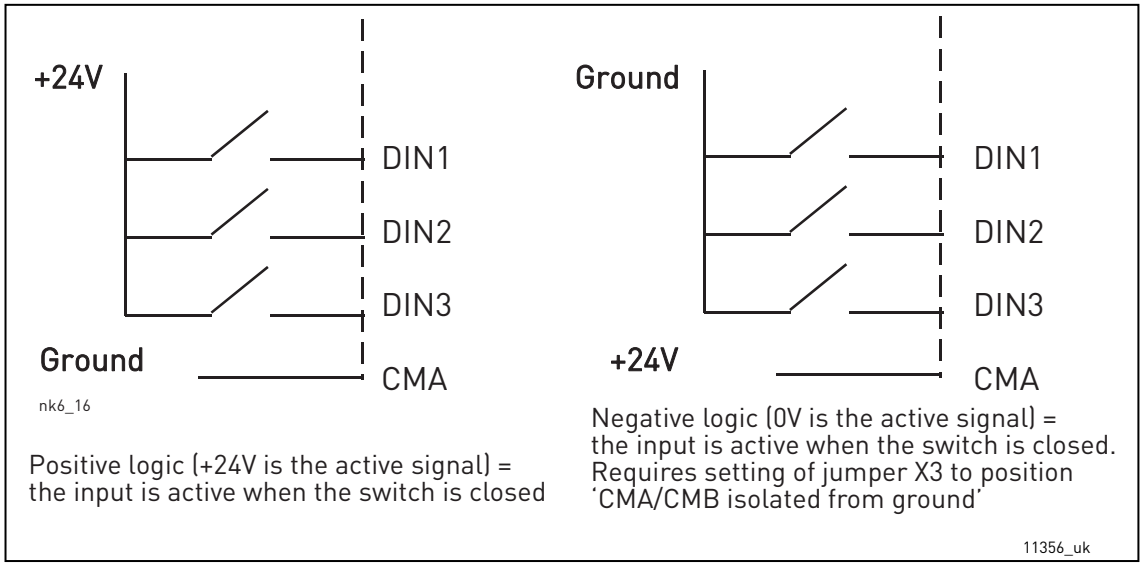

Figure 47. Positive/Negative logic

6.2.3.2 Jumper selections on the OPT-A1 basic board

The user is able to customise the functions of the AC drive to better suit his needs by selecting certain positions for the jumpers on the OPT-A1 board. The positions of the jumpers determine the signal type of analogue and digital inputs.

On the A1 basic board, there are four jumper blocks X1, X2, X3 and X6 each containing eight pins and two jumpers. The selectable positions of the jumpers are shown in Figure 49.

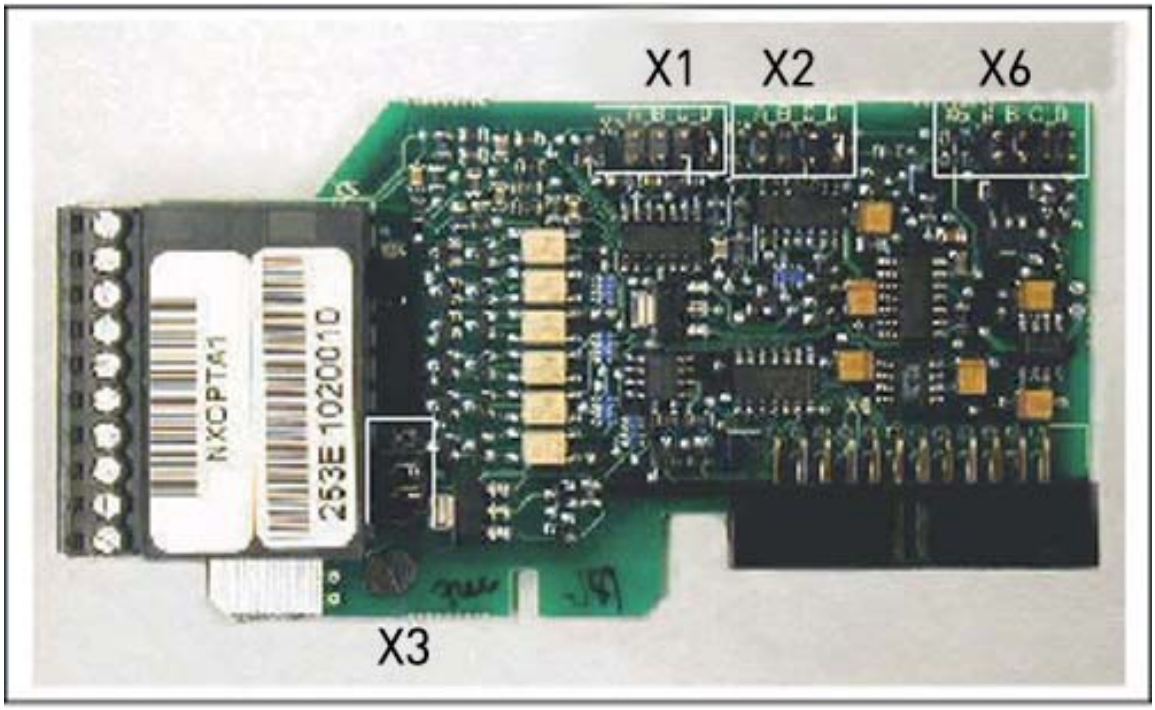

11357_00

Figure 48. Jumper blocks on OPT-A1

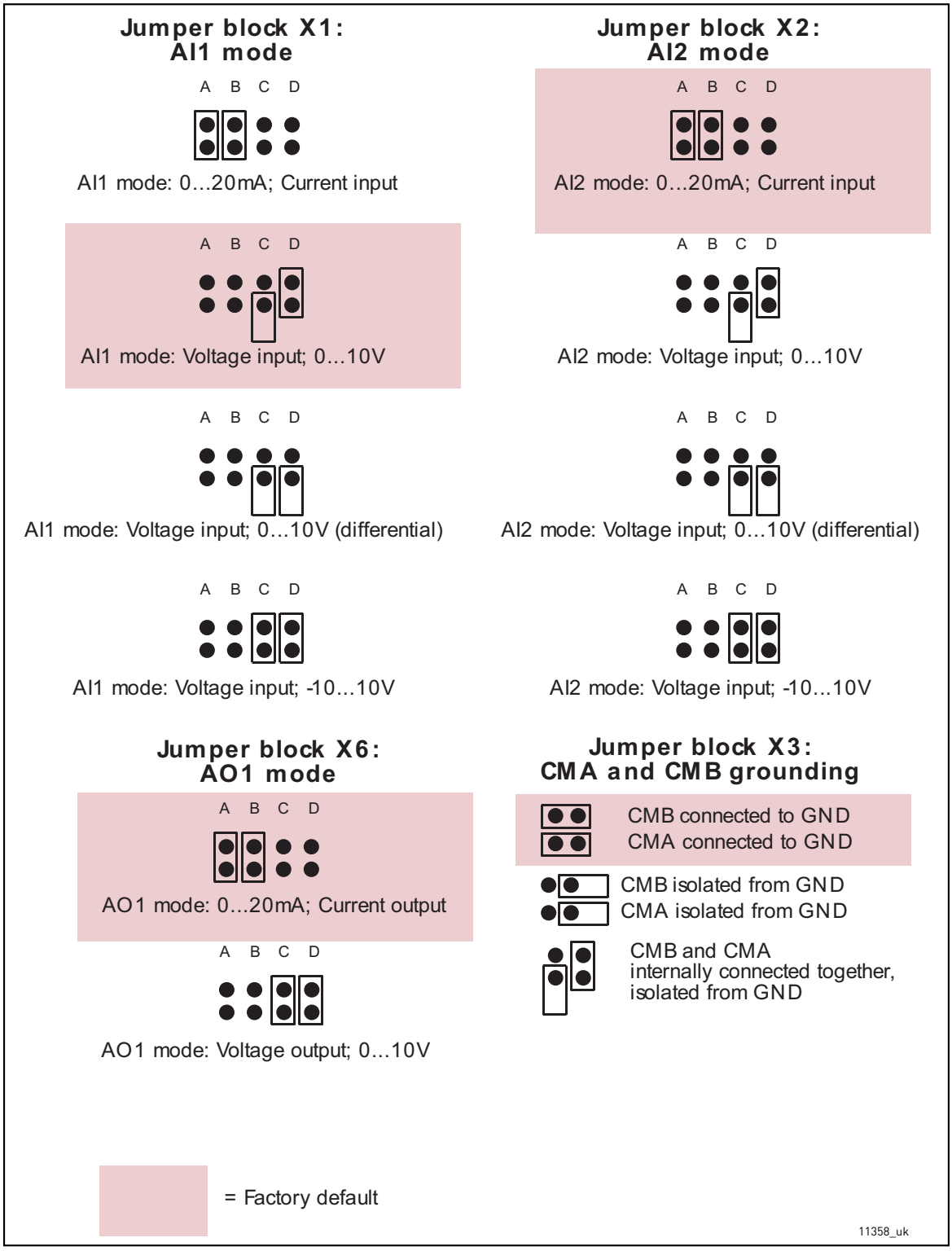

Figure 49. Jumper selection for OPT-A1

If you change the AI/AO signal content also remember to change the corresponding board parameter in menu M7.

6.2.4 CONTROL UNIT MOUNTING BOX

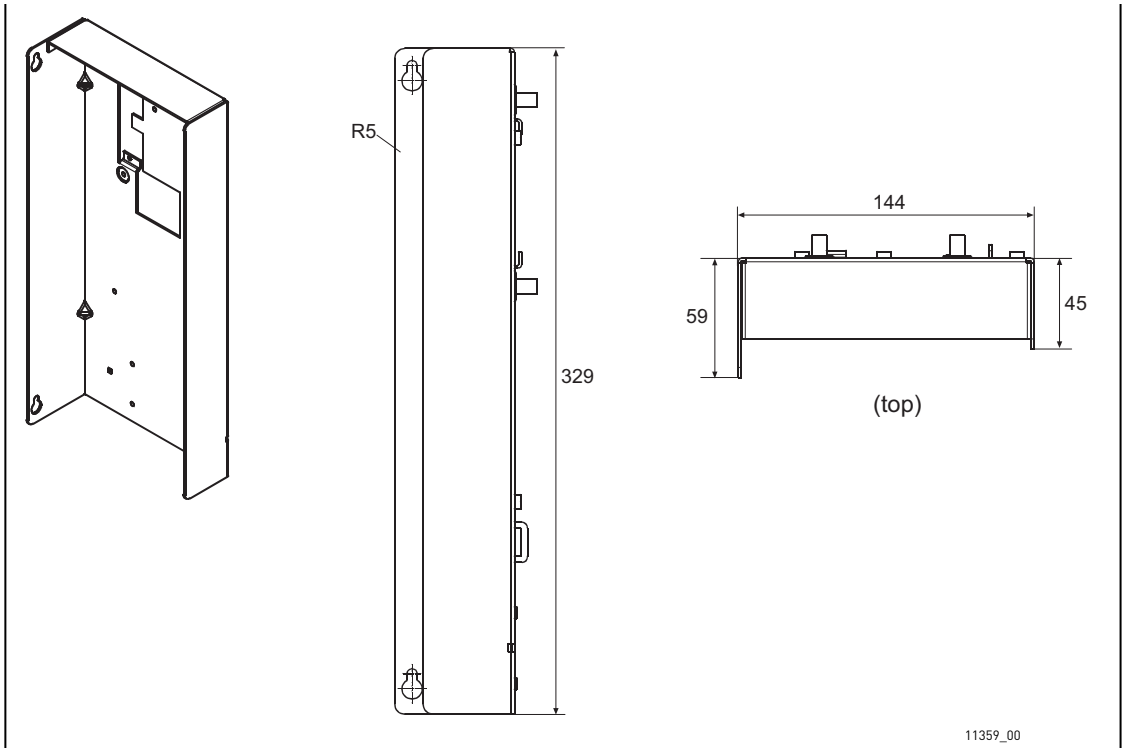

Figure 50. Control unit mounting box dimensions

6.2.4.1 Installing the control unit mounting box

The control unit of VACON® NX Liquid-Cooled drive is mounted into a metal box which then can be placed inside the enclosure. VACON® alpha-numeric or graphical keypad can be used to control the

drive. The keypad is connected to the control unit with an RS232 cable and mounted on the enclosure door. Pay special attention to the grounding of the cable, see instructions below.

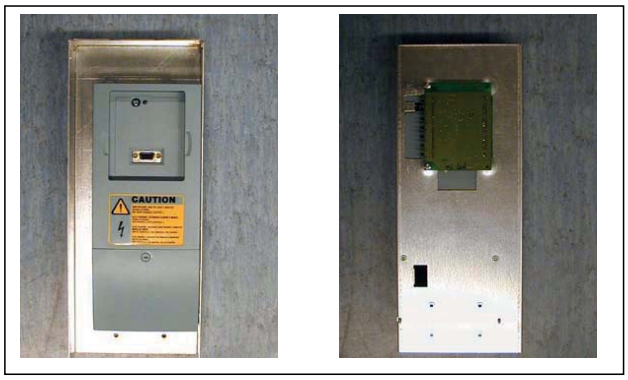

Figure 51. Control unit installed into the mounting box; Left: front; Right: back

1. If the keypad sits in its place on the control unit, remove the keypad.
2. Connect the male end of the keypad cable to the D-connector of the control unit. Use VACON® RS232 cable included in the delivery. Figure 1.
3. Run the cable over the top of the box and secure with plastic band on the backside. Figure 2.
4. Grounding of keypad cable: Earth the keypad cable in the mounting box frame by fixing the branch cable with a screw underneath the control unit. See Figures 3 and 4.
5. Mount the control unit mounting box in the front-left corner of the enclosure using two screws as shown in Figure 5. **NOTE!** Do not install the mounting box floating (with e.g. plastic screws). To ensure a proper grounding of the control unit box assembly, we recommend that an additional grounding cable be drawn from the mounting box and connected to the cabinet frame. Use a braided copper cable designed for high-frequency signals. Remember to remove the paint from the enclosure grounding point to ensure proper connection for the grounding cable.
6. Connect the optical cables (or the flat cable) to the power unit. See Chapter 6.3.2 and Figures 6 and 7.
7. Connect the female end of the keypad cable to keypad on the enclosure door, Figure 8. Use a cable channel for the cable run, Figure 9.



Figure. 1



Figure. 2



Figure. 3



11363_00

Figure. 4



11364_00

Figure. 5



11365_00

Figure. 6

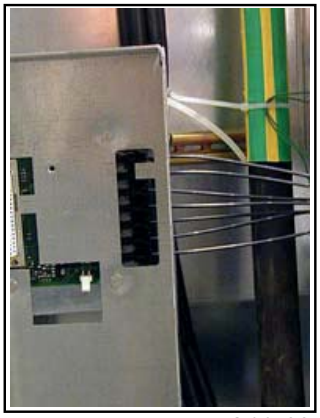

11366_00

Figure. 7



11367_00

Figure. 8



11368_00

Figure. 9

6.3 INTERNAL CONNECTIONS

As a general rule, all internal electrical and communications connections are made at the factory. However, if modules have to be moved, for example, and the connections therefore removed, you will have to re-establish the connections between 1) the Power Unit ASIC and the Driver Board(s) on the one hand and 2) the Power Unit ASIC and the Optical Cable Adapter Board on the other.

6.3.1 CONNECTIONS BETWEEN POWER UNIT ASIC AND DRIVER BOARDS

See the figures and tables on the following pages for the correct connection of internal electrical and communications connections.

NOTE! The minimum optical cable bending radius is 50 mm.

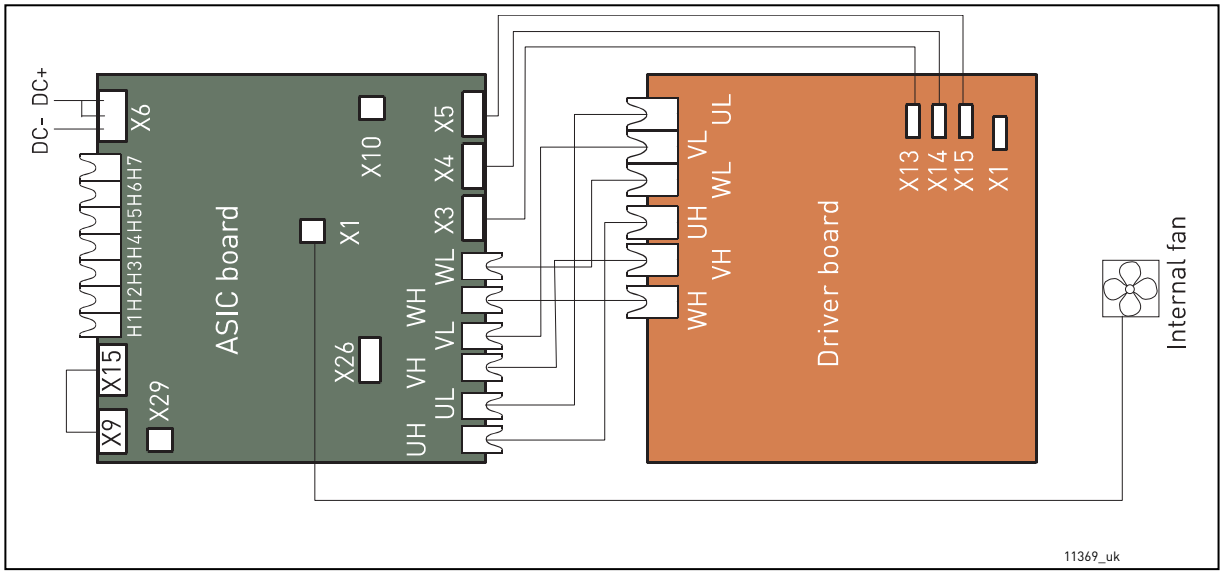

Figure 52. Terminals and connections between ASIC and driver board (CH61, CH62 and CH72)

Terminals on ASIC board	
X9	Charge feedback
X15	Charging relay output
X6	Connect to DC-link on AC drive
X29	Flow supervision input
X26	Star Coupler terminal for drives greater than CH61
X10	+24 V supply voltage to control board
X3	Connect to terminal X13 on driver board
X4	Connect to terminal X14 on driver board
X5	Connect to terminal X15 on driver board
X1	Driver board fan power connection

Gate driver signals from ASIC to driver board	
UH	Connect to UH on driver board
UL	Connect to UL on driver board
VH	Connect to VH on driver board
VL	Connect to VL on driver board
WH	Connect to WH on driver board
WL	Connect to WL on driver board
Terminal X1 on driver board	
X1	Connect to DC-link on AC drive

NOTE! Terminals X9 and X15 are connected by default. The cable can be removed if the signal is receved from other source.

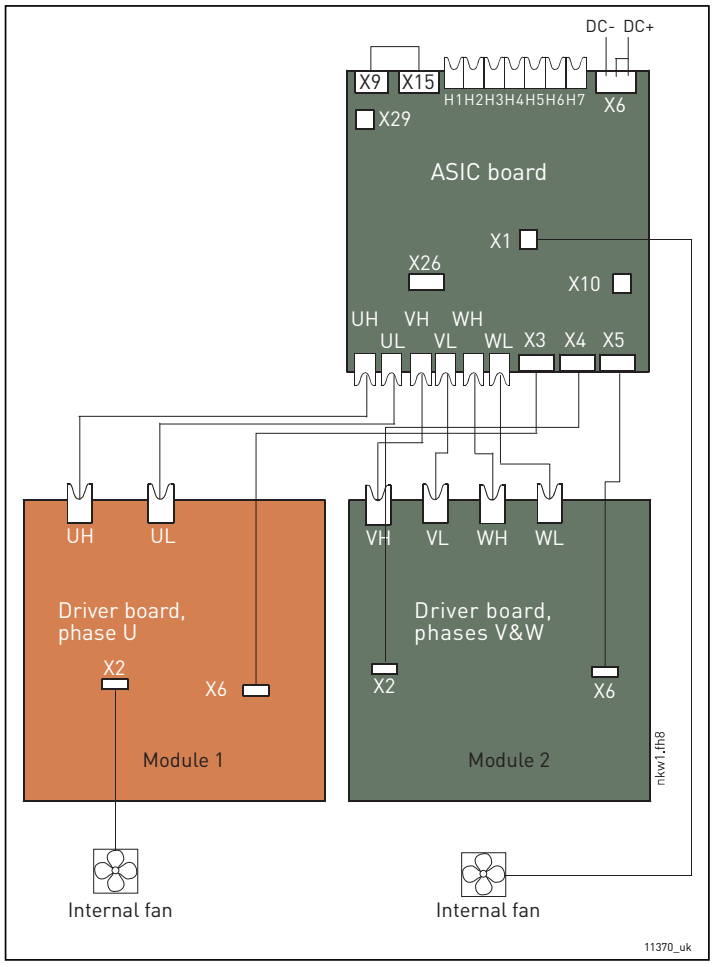

Figure 53. Terminals and connections between ASIC and driver boards (CH63)

Terminals on ASIC board	
X9	Charge feedback
X15	Charging relay output
X6	Connect to DC-link on AC drive
X29	Flow supervision input
X26	Star Coupler terminal for drives greater than CH61
X10	+24 V supply voltage to control board
X3	Connect to terminal X6 on phase U driver board
X4	Connect to terminal X2 on phase V/W driver board

Gate driver signals from ASIC to driver board	
UH	Connect to UH on Phase U driver board
UL	Connect to UL on Phase U driver board
VH	Connect to VH on Phase V/W driver board
VL	Connect to VL on Phase V/W driver board
WH	Connect to WH on Phase V/W driver board
WL	Connect to WL on Phase V/W driver board
Terminal X2 on Phase U driver board	
X2	Internal fan power connection for Mod. 1

Terminals on ASIC board	
X5	Connect to terminal X6 on phase V/W driver board
X1	Internal fan power connection for Mod. 2

Gate driver signals from ASIC to driver board

NOTE! Terminals X9 and X15 are connected by default. The cable can be removed if the signal is receved from other source.

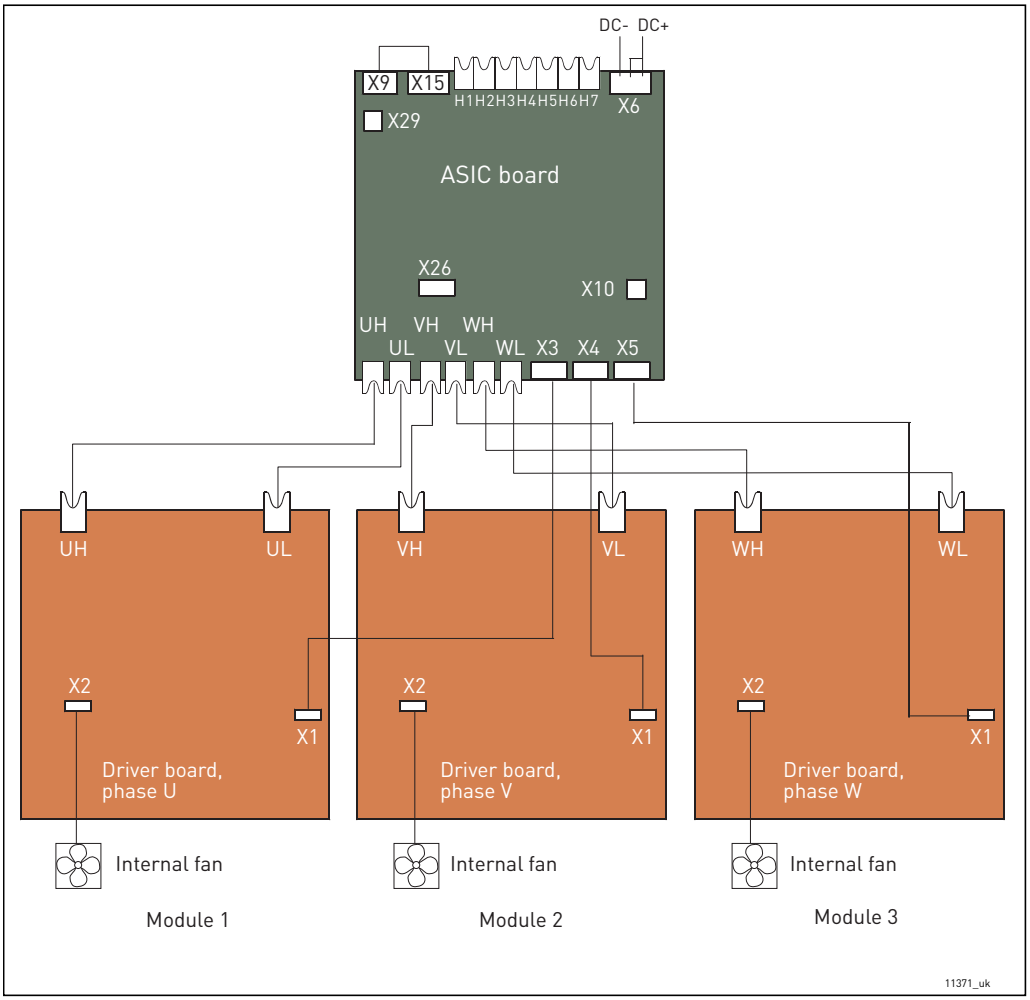

Figure 54. Terminals and connections between ASIC and driver boards (CH64 and CH74)

Terminals on ASIC board	
X9	Charge feedback
X15	Charging relay output
X6	Connect to DC-link on AC drive
X29	Flow supervision input
X26	Star Coupler terminal for drives greater than CH61

Gate driver signals from ASIC to driver board	
UH	Connect to UH on Phase U driver board
UL	Connect to UL on Phase U driver board
VH	Connect to VH on Phase V driver board
VL	Connect to VL on Phase V driver board
WH	Connect to WH on Phase W driver board

Terminals on ASIC board	
X10	+24 V supply voltage to control board
X3	Connect to terminal X1 on phase U driver board
X4	Connect to terminal X1 on phase V driver board
X5	Connect to terminal X1 on phase W driver board

Gate driver signals from ASIC to driver board	
WL	Connect to WL on Phase W driver board
Terminal X2 on Phase driver board	
X2	Internal fan power connection

NOTE! Terminals X9 and X15 are connected by default. The cable can be removed if the signal is receved from other source.

6.3.2 CONNECTIONS BETWEEN POWER UNIT ASIC AND THE CONTROL UNIT

The communication connections between the VACON® NX Liquid-Cooled drive power unit and the control unit (see Chapter 6.2) can be established using either the conventional round cable (standard in chassis CH3, CH4 and CH5) or optical cable (all chassis). Note that for chassis CH61 and greater, only optical cables can be used.

6.3.2.1 Connections with round cable (Chassis CH3, CH4 and CH5)

The communication connection between the drive power unit and the control unit in chassis CH3, CH4 and CH5 are primarily made with conventional round cable and D-connectors at both ends.

Remove the protective cover to reveal the D-connector on the power unit. Connect the one end of the communication cable to the D-connector of the power unit and the other end to the control unit. If the Optical Cable Adapter Board (see below) sits on the D-connector of the control unit you have to remove it first. See Figure 55 below.

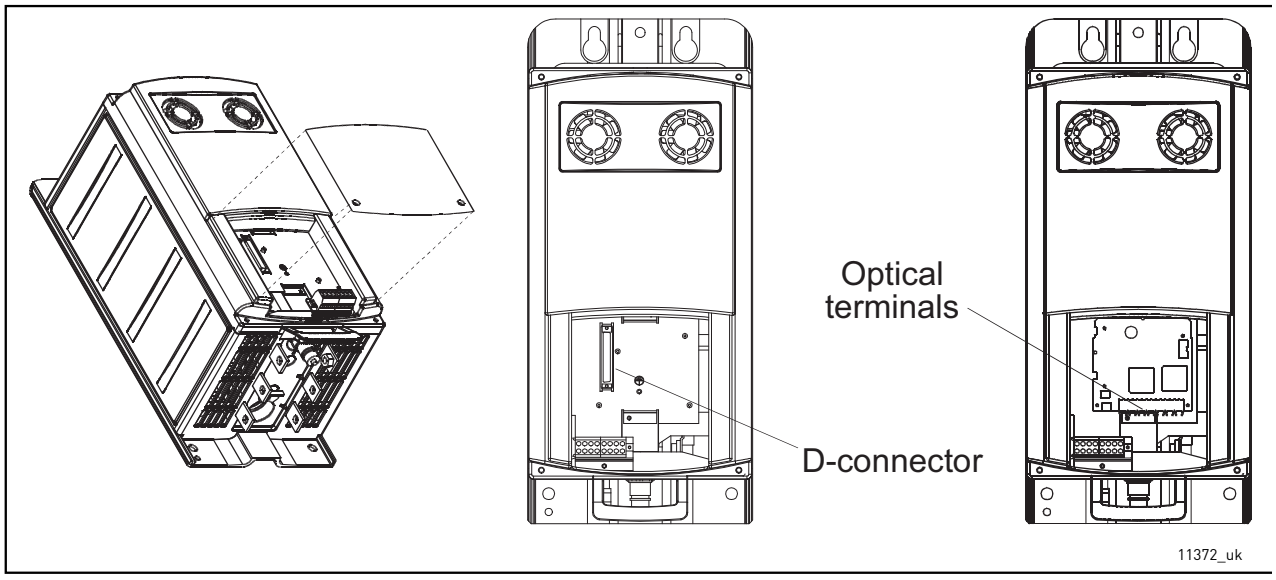

Figure 55.

6.3.2.2 Connections with optical cable (Chassis CH3, CH4, CH5, CH6x and CH7x)

If optical cables are used to link the power unit and the control board, a special Optical Cable Adapter Board connected to the control board D-connector must be used. To connect the optical cables to the power unit, you will have to remove the protective cover first. Connect the optical cables as shown in Figure 55 and Figure 56. See also Chapter 6.2.4.

The maximum length of the optical cable is 8 m.

The control unit uses 24 VDC supplied from the ASIC board, the location of which can be seen in the figures below. To access the board, remove the protective cover in front of the module. Connect the power supply cable to the X10 connector on the ASIC board and to the X2 connector on the rear side of the control unit.

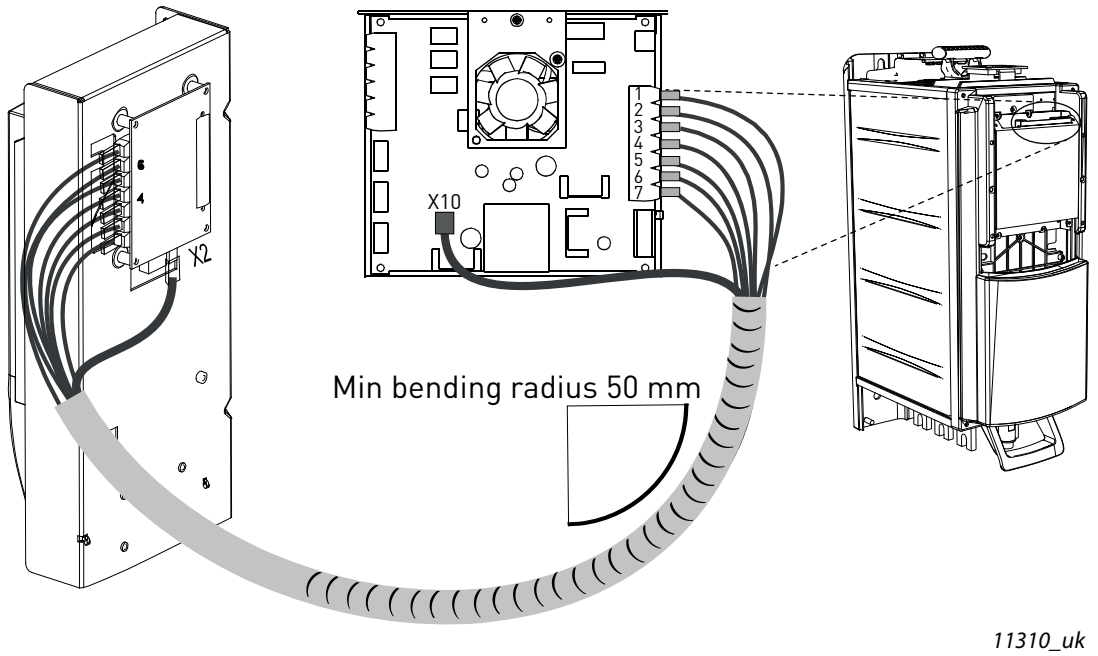

Figure 56. Connecting the power supply and control cables to the control unit, Ch6x

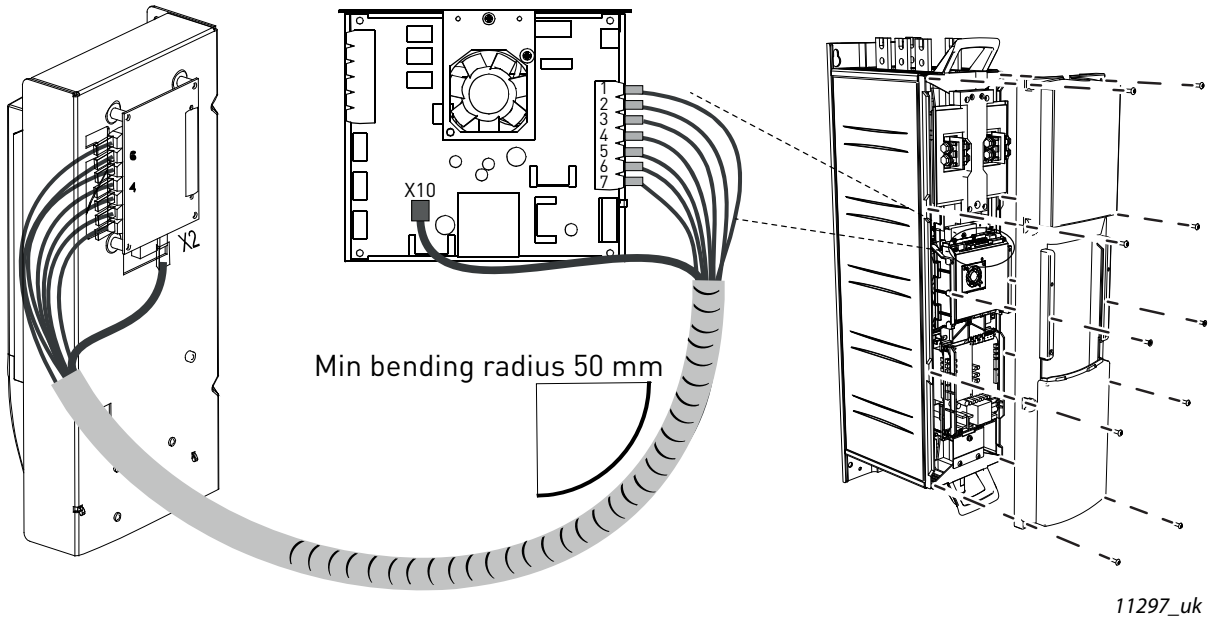

Figure 57. Connecting the power supply and control cables to the control unit, Ch7x

Each fibre optic cable has a number 1...7 marked on the cable shield at both cable ends. Connect each cable to the connectors marked with the same number 1...7 on the ASIC board and on the rear side of the control unit.

Optical terminals on Optical cable adapter board:

H1	Gate control enable
H2	Phase U control
H3	Phase V control
H4	Phase W control
H5	ADC synchronization
H6	VaconBus data from control board to ASIC
H7	VaconBus data from ASIC to control board

Other terminals on adapter board:

X1	Control board connection
X2	Supply voltage 24Vin (from power unit ASIC)
X3	Supply voltage 24Vin (customer); - Max. current 1A - Terminal #1: + - Terminal #2: –



CAUTION! Be careful when connecting the fibre optic cables!
Connecting the wires incorrectly
may damage power electronic components.

NOTE! The minimum optical cable bending radius is 50 mm.

NOTE! Terminals X2 and X3 can be in use simultaneously. However, if the +24 V supply from the control I/O terminals (e.g. from board OPT-A1) is used, this terminal must be protected with a diode.

Fix the cable bundle at two or more points, at least one at each end, to prevent damages to the cables.

Fasten the removed cover(s) on the inverter module when the work is finished.

6.3.2.3 Connections with optical cable (Chassis 2xCH64 and 2xCH74)

If optical cables are used to link the power unit and the control board, a special Optical Cable Adapter Board connected to the control board D-connector must be used. To connect the optical cables to the power unit, you will have to remove the protective cover first. Connect the optical cables as shown in Figure 59 and Figure 59. See also Chapter 6.2.4.

The maximum length of the optical cable is 8 m.

The control unit uses 24 VDC supplied from the ASIC board, which is located on the left side of the power unit 1. To access the board, remove the protective cover in front of the power module. Connect the power supply cable to the X10 connector on the ASIC board and to the X2 connector on the rear side of the control unit.

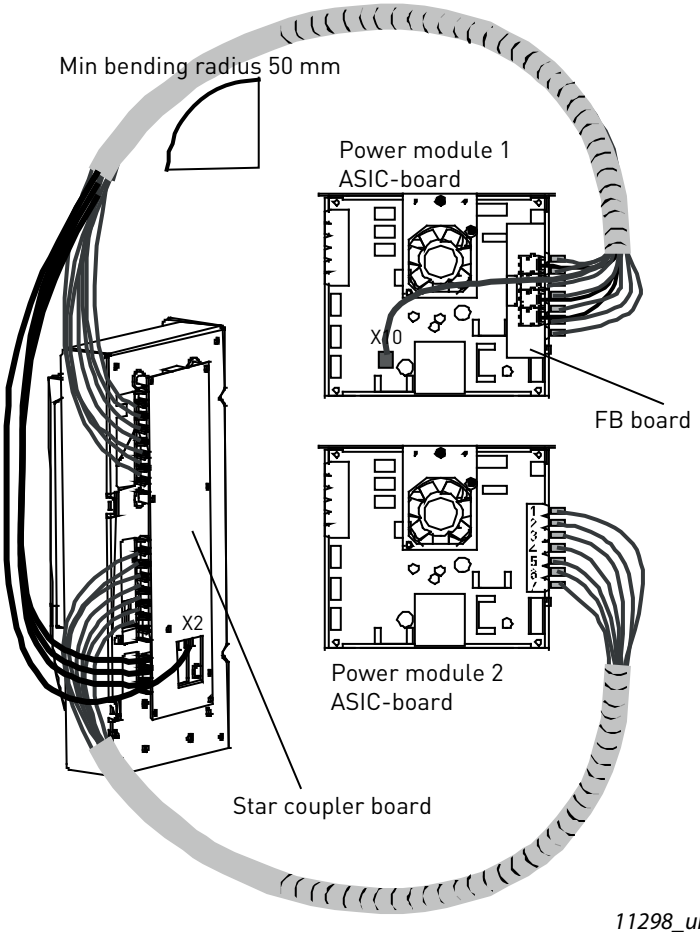

Figure 58. Connecting the power supply and control cables to the control unit, 2xCh64 and 2xCH74

Each fibre optic cable has a number 1...8 and 11...18 marked on the cable shield at both cable ends. Connect each cable to the connectors marked with the same number on the ASIC board and on the rear side of the control unit. Additionally, you may have to connect the 4 fibre cables from the feedback board to the star coupler board. The list of the optic signals can be found in Figure 59.

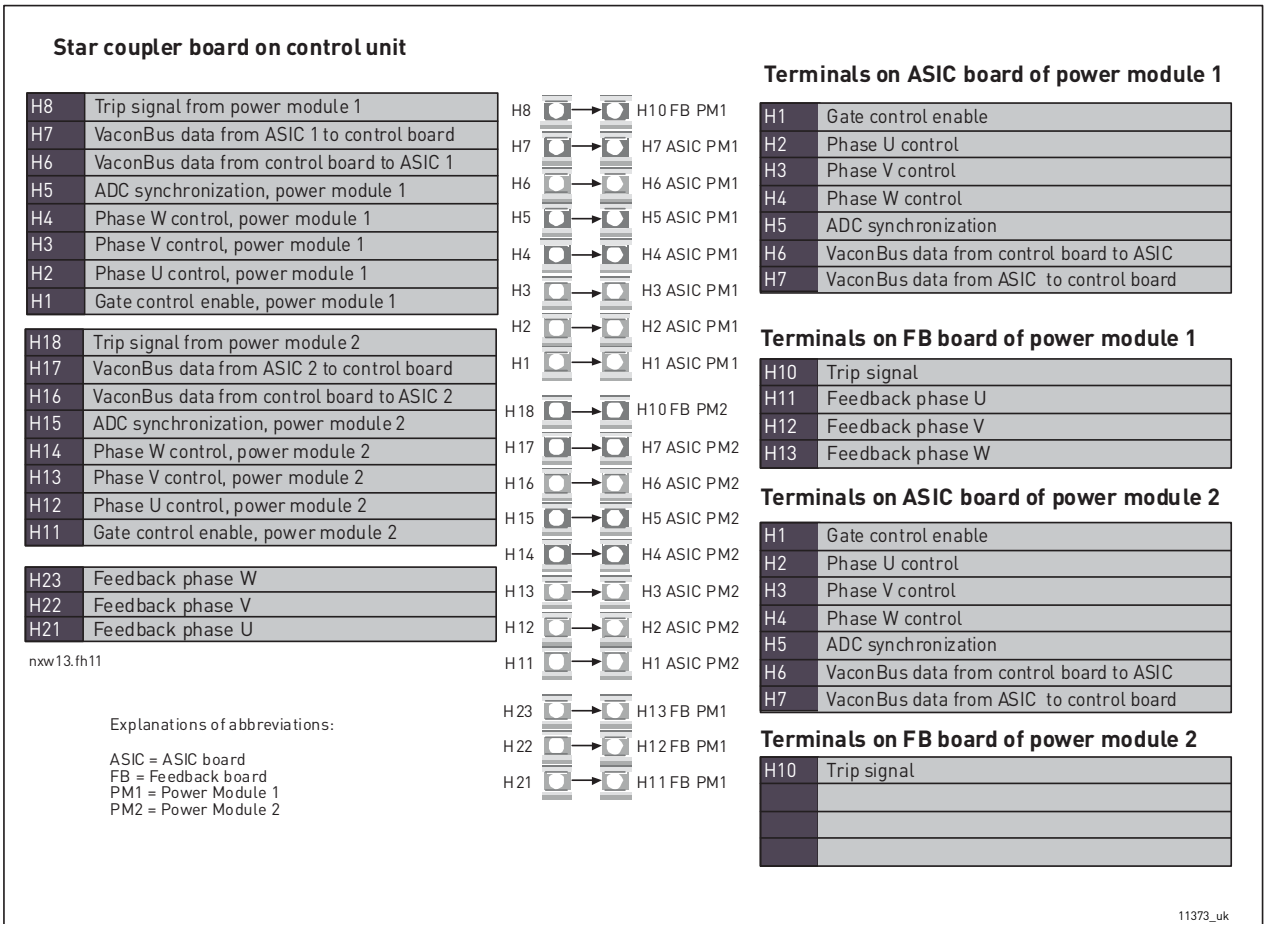

Figure 59. Terminals and connections between the star-coupler board, ASIC boards and feedback boards (CH64 and CH74)



Be careful when connecting the fibre optic cables! Connecting the wires incorrectly may damage power electronic components.

NOTE! The minimum optical cable bending radius is 50 mm.

NOTE! Terminals X2 and X3 can be in use simultaneously. However, if the +24 V supply from the control I/O terminals (e.g. from board OPT-A1) is used, this terminal must be protected with a diode.

Fix the cable bundle at two or more points, at least one at each end, to prevent damages to the cables.

Fasten the removed cover(s) on the inverter module when the work is finished.

6.3.3 CONNECTIONS BETWEEN MAINS DEVICE AND INVERTER POWER MODULE

The dimensions in the table below must be taken into account if some kind of mains device (e.g. fuse, switch fuse, contactor) is used in the input line between the mains and the VACON® Liquid-Cooled inverter.

Table 47. Connections from mains device to drive

Chassis	Type	Connection		
		Conductor cross section [mm^2]	Busbar size (flexible connection)	Busbar size (bare Cu)
CH3	0016_5	6		
	0022_5			
	0031_5			
CH3	0038_5	10		
	0045_5			
	0061_5			
CH4	0072_5	25		
	0087_5			
	0105_5			
CH4	0140_5	50		
CH5	0168_5	70	2*24*1	
CH5	0205_5	95		
CH5	0261_5	120		1*50*5
CH61	0300_5	2*70	5*32*1	
CH61	0385_5			
CH72	0460_5	2*95		
CH72	0520_5	2*120		
CH72	0590_5	2*150		1*80*5
CH72	0650_5		2*(6*40*1)	
CH72	0730_5			
CH63	0820_5			1*100*5
CH63	0920_5			
CH63	1030_5			
CH63	1150_5			
CH74	1370_5			2*100*5
CH74	1640_5			
CH74	2060_5			3*100*5
CH74	2300_5			

Table 48. Connections from mains device to drive

Chassis	Type	Connection		
		Conductor cross section [mm²]	Busbar size (flexible connection)	Busbar size (bare Cu)
CH61	0170_6	70	2*24*1	
	0208_6	95		
	0261_6	120		1*50*5
CH62	0325_6	2*70	5*32*1	
	0385_6			
	0416_6	2*95		
	0460_6			
	0502_6	2*120		
CH63	0590_6	2*150	2*(6*40*1)	1*80*5
	0650_6			
	0750_6			
CH64	0820_6			1*100*5
	0920_6			
	1030_6			
	1180_6			2*100*5
	1300_6			
	1500_6			

7. CONTROL KEYPAD

The control keypad is the link between the VACON® AC drive and the user. The VACON® NX control keypad features an alphanumeric display with seven indicators for the Run status (RUN, ↻↻, READY, STOP, ALARM, FAULT) and three indicators for the control place (I/O term/ Keypad/ BusComm). There are also three Status Indicator LEDs (green - green - red), see below.

The control information, i.e. the number of menu, description of menu or the displayed value and the numeric information are presented on three text lines.

The AC drive is operable through the nine push-buttons of the control keypad. Furthermore, the buttons serve the purposes of parameter setting and value monitoring.

The keypad is detachable and isolated from the input line potential.

7.1 INDICATIONS ON THE KEYPAD DISPLAY

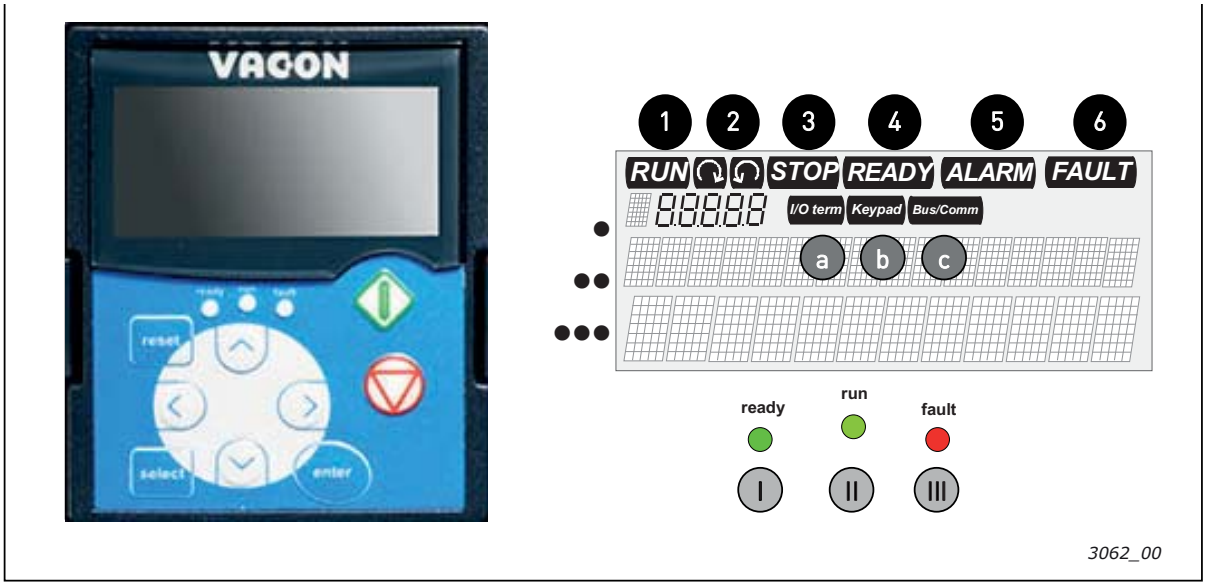

Figure 60. VACON® control keypad and drive status indications

7.1.1 DRIVE STATUS INDICATIONS

The drive status indications tell the user what the status of the motor and the drive is and whether the motor control software has detected irregularities in motor or AC drive functions.

1	RUN	=	Motor is running; Blinks when the stop command has been given but the frequency is still ramping down.
2	↻↻	=	Indicates the direction of motor rotation.
3	STOP	=	Indicates that the drive is not running.
4	READY	=	Lights when AC power is on. In case of a trip, the symbol will not light up.
5	ALARM	=	Indicates that the drive is running outside a certain limit and a warning is given.
6	FAULT	=	Indicates that unsafe operating conditions were encountered due to which the drive was stopped.

7.1.2 CONTROL PLACE INDICATIONS

The symbols I/O term, Keypad and Bus/Comm (see Figure 60) indicate the choice of control place made in the Keypad Control Menu (see Chapter 7.3.3).

a	I/O term	=	I/O terminals are the selected control place; i.e. START/STOP commands or reference values etc. are given through the I/O terminals.
b	Keypad	=	Control keypad is the selected control place; i.e. the motor can be started or stopped, or its reference values etc. altered from the keypad.
c	Bus/ Comm	=	The AC drive is controlled through a fieldbus.

7.1.3 STATUS LEDS (GREEN – GREEN – RED)

The status LEDs light up in connection with the READY, RUN and FAULT drive status indicators.

I	●	=	Illuminates with the AC power connected to the drive and no faults are active. Simultaneously, the drive status indicator READY is lit up.
II	●	=	Illuminates when the drive is running. Blinks when the STOP button has been pushed and the drive is ramping down.
III	●	=	Blinks when unsafe operating conditions were encountered due to which the drive was stopped (Fault Trip). Simultaneously, the drive status indicator FAULT blinks on the display and the fault description can be seen, see Chapter 7.3.4, Active Faults.

7.1.4 TEXT LINES

The three text lines (•, ••, •••) provide the user with information on his present location in the keypad menu structure as well as with information related to the operation of the drive.

•	=	Location indication; displays the symbol and number of menu, parameter etc. Example: M2 = Menu 2 (Parameters); P2.1.3 = Acceleration time
••	=	Description line; Displays the description of menu, value or fault.
•••	=	Value line; Displays the numerical and textual values of references, parameters etc. and the number of submenus available in each menu.

7.2 KEYPAD PUSH-BUTTONS

The VACON® alphanumeric control keypad features 9 push-buttons that are used for the control of the AC drive (and motor), parameter setting and value monitoring.

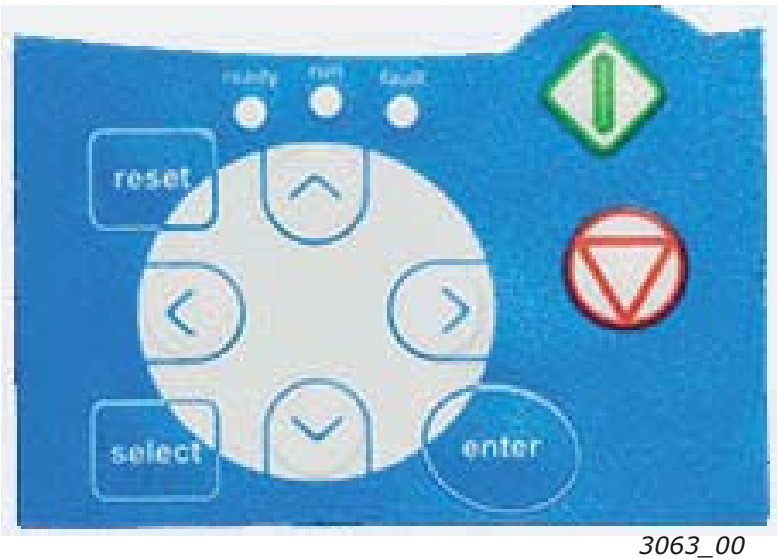

3063_00

Figure 61. Keypad push-buttons

7.2.1 BUTTON DESCRIPTIONS

reset = This button is used to reset active faults (see Chapter 7.3.4).

select = This button is used to switch between two latest displays. May be useful when you want to see how the changed new value influences some other value.

enter = The Enter button serves for:
1) confirmation of selections
2) fault history reset (2...3 seconds)

▲ + = Browser button up
Browse the main menu and the pages of different submenus.
Edit values.

- ▼ = Browser button down
Browse the main menu and the pages of different submenus.
Edit values.

◄ = Menu button left
Move backward in menu.
Move cursor left (in parameter menu).
Exit edit mode.
Swap between keypad control and another control as active control place (see Chapter 7.2.1.1)

► = Menu button right
Move forward in menu.
Move cursor right (in parameter menu).
Enter edit mode.



= Start button
Pressing this button starts the motor if the keypad is the active control place. See Chapter 7.3.3.



= Stop button. Pressing this button stops the motor (unless disabled by parameter R3.4/R3.6). See Chapter 7.3.3.

7.2.1.1 Swap between keypad control and another control as active control place

With the I/O terminals or fieldbus selected as the active control place, it is also possible to change the control to the local keypad and back to the original control place.

Irrespective of your location in the menu structure, keep the ◄ button pushed down for 5 seconds. This will activate the Start & Stop keypad control. The display will jump to the editing mode of *R3.2 Keypad Reference* and you will be able to enter the desired frequency on the keypad. Push the start button to start the drive.

Pushing the ◄ button again for 5 seconds returns the control to the original control place (active control place, P3.1) and its reference. **NOTE:** The motor starts if the start command of the active control place is ON and run at the formerly set reference. The keypad display will show monitoring value *V1.1 Output Frequency*.

If any of the parameter values in menu M3 is changed in between the swapping the keypad reference will be reset to 0.00 Hz.

7.3 NAVIGATION ON THE CONTROL KEYPAD

The data on the control keypad are arranged in menus and submenus. The menus are used for example for the display and editing of measurement and control signals, parameter settings (Chapter 7.3.2), reference values and fault displays (Chapter 7.3.4). Through the menus, you can also adjust the contrast of the display (page 137).

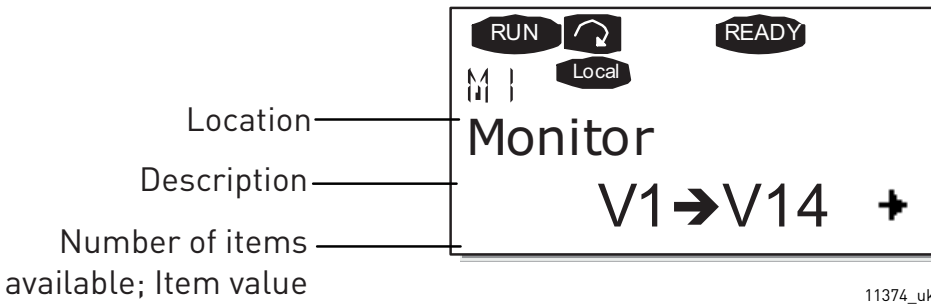

The first menu level consists of menus M1 to M7 and is called the Main menu. The user can navigate in the main menu using the Browser buttons up and down. The desired submenu can be entered from the main menu using the Menu buttons. When there still are pages to enter under the currently displayed menu or page, you can see an arrow (➔) in the lower right corner of the display and by pressing the Menu button right, you can reach the next menu level.

The control keypad navigation chart is shown on the next page. Note that the menu M1 is located in the lower left corner. From there you will be able to navigate your way up to the desired menu using the menu and browser buttons.

More detailed descriptions of the menus you will find later in this Chapter.

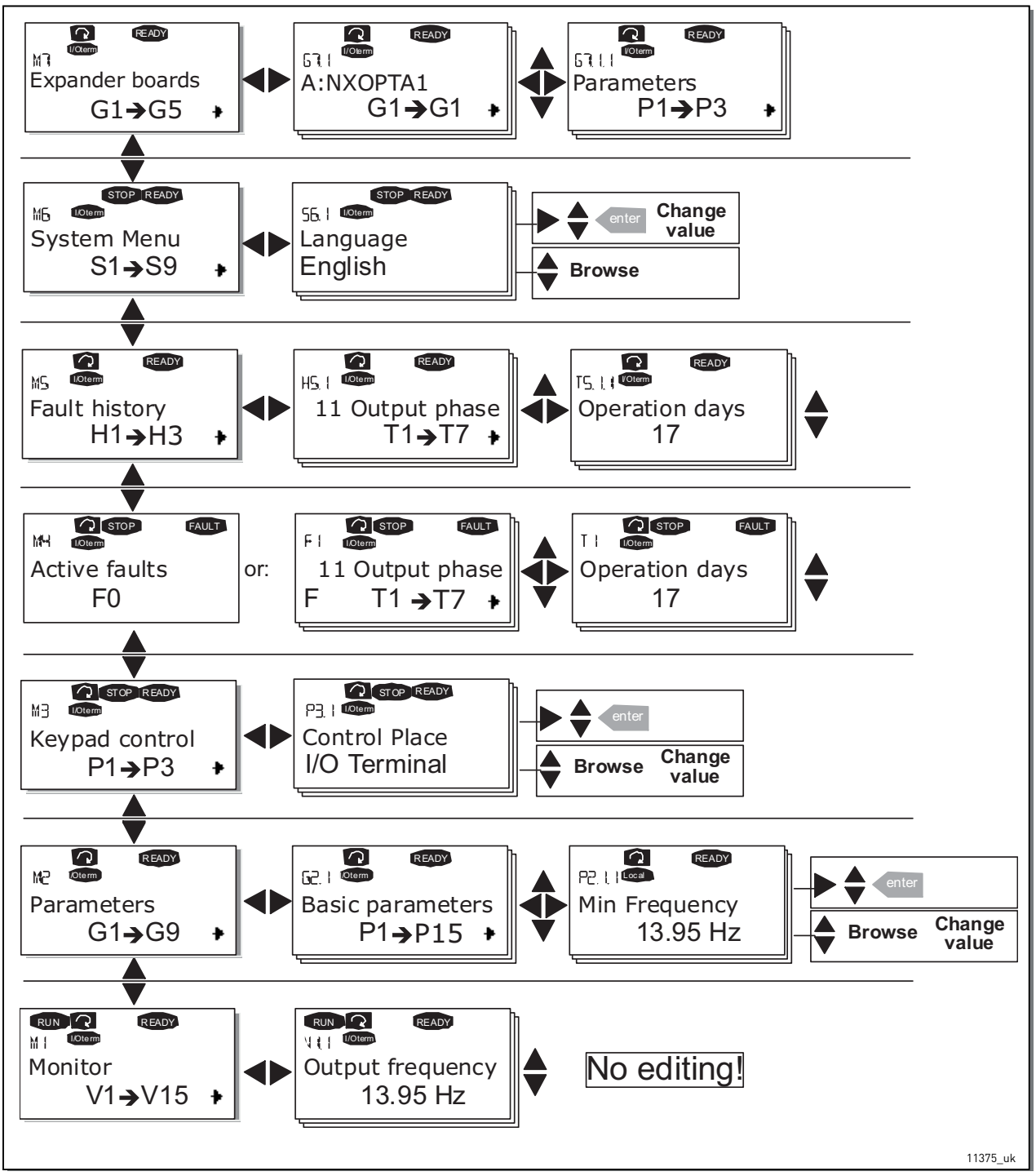

Figure 62. Keypad navigation chart

7.3.1 MONITORING MENU (M1)

You can enter the Monitoring menu from the Main menu by pushing the Menu button right when the location indication M1 is visible on the first line of the display. How to browse through the monitored values is presented in Figure 63.

The monitored signals carry the indication V#.# and they are listed in Table 49. The values are updated once every 0.3 seconds.

This menu is meant only for signal checking. The values cannot be altered here. For changing values of parameters see Chapter 7.3.2.

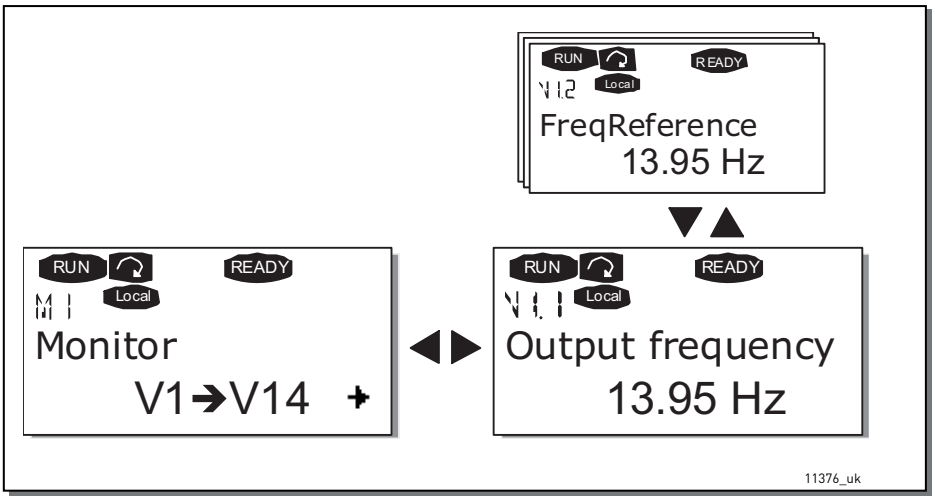

Figure 63. Monitoring menu

Table 49. Monitored signals

Code	Signal name	Unit	Description
V1.1	Output frequency	Hz	Frequency to the motor
V1.2	Frequency reference	Hz	
V1.3	Motor speed	rpm	Calculated motor speed
V1.4	Motor current	A	Measured motor current
V1.5	Motor torque	%	Calculated motor shaft torque
V1.6	Motor power	%	Calculated motor shaft power
V1.7	Motor voltage	V	Calculated motor voltage
V1.8	DC-link voltage	V	Measured DC-link voltage
V1.9	Unit temperature	ºC	Heat sink temperature
V1.10	Motor temperature	%	Calculated motor temperature. See VACON® NX All in One application manual.
V1.11	Voltage input	V	AI1
V1.12	Current input	mA	AI2
V1.13	DIN1, DIN2, DIN3		Digital input statuses
V1.14	DIN4, DIN5, DIN6		Digital input statuses
V1.15	DO1, RO1, RO2		Digital and relay output statuses
V1.16	Analogue output current	mA	AO1
V1.17	Multimonitoring items		Displays three selectable monitoring values. See Chapter 7.3.6.5.

NOTE! The All in One applications embody more monitoring values.

7.3.2 PARAMETER MENU (M2)

Parameters are the way of conveying the commands of the user to the AC drive. The parameter values can be edited by entering the Parameter Menu from the Main Menu when the location indication M2 is visible on the first line of the display. The value editing procedure is presented in Figure 64.

Push the Menu button right once to move into the Parameter Group Menu (G#). Locate the parameter group desired by using the Browser buttons and push the Menu button right again to enter the group and its parameters. Use again the Browser buttons to find the parameter (P#) you want to edit. From here you can proceed in two different ways: Pushing the Menu button right takes you to the edit mode. As a sign of this, the parameter value starts to blink. You can now change the value in two different manners:

1. Just set the new desired value with the Browser buttons and confirm the change with the Enter button. Consequently, the blinking stops and the new value is visible in the value field.
2. Push the Menu button right once again. Now you will be able to edit the value digit by digit. This editing manner may come in handy, when a relatively greater or smaller value than that on the display is desired. Confirm the change with the Enter button.

The value will not change unless the Enter button is pushed. Pressing the Menu button left takes you back to the previous menu.

Several parameters are locked, i.e. uneditable, when the drive is in RUN status. If you try to change the value of such a parameter the text *Locked* will appear on the display. The AC drive must be stopped in order to edit these parameters.

The parameters values can also be locked using the function in menu M6 (see Chapter Parameter lock (P6.5.2)).

You can return to the Main menu anytime by pressing the Menu button left for 3 seconds.

The basic application package "All in One+" includes seven applications with different sets of parameters.

Once in the last parameter of a parameter group, you can move directly to the first parameter of that group by pushing the Browser button up.

See the diagram for parameter value change procedure on page 123.

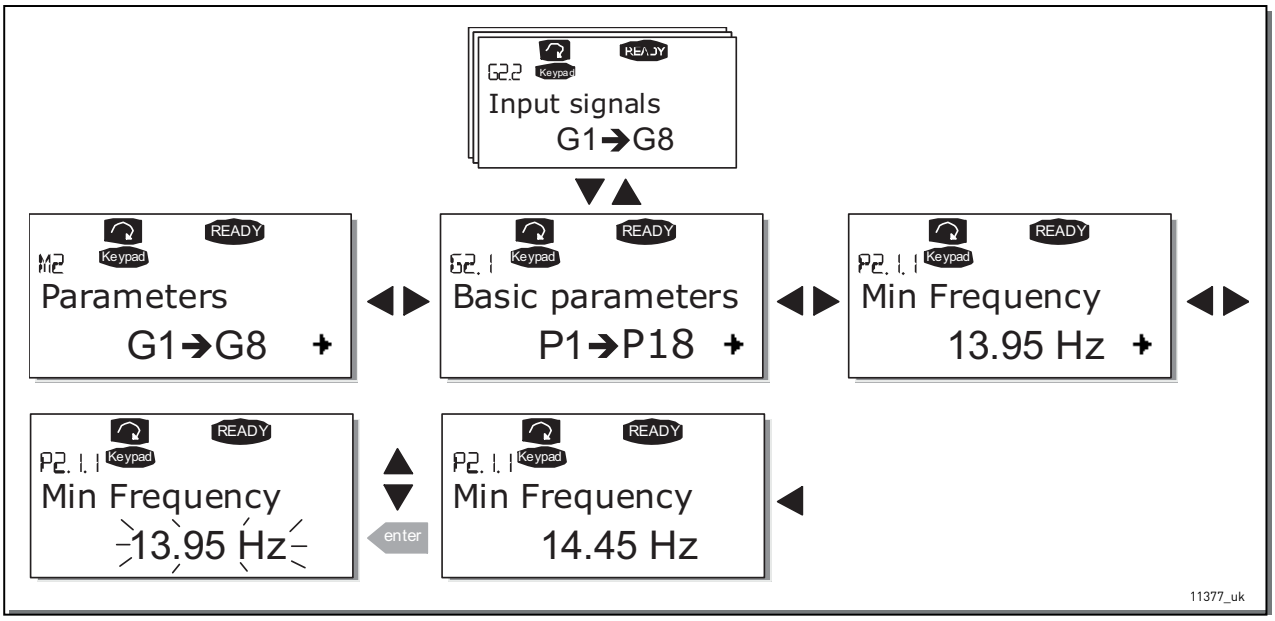

Figure 64. Parameter value change procedure

7.3.3 KEYPAD CONTROL MENU (M3)

In the Keypad Controls Menu, you can choose the control place, edit the frequency reference and change the direction of the motor. Enter the submenu level with the Menu button right.

Table 50. Keypad control parameters, M3

Code	Parameter	Min	Max	Unit	Default	Cust	ID	Note
P3.1	Control place	1	3		1		125	**1** = I/O terminal **2** = Keypad **3** = Fieldbus
R3.2	Keypad reference	Par. 2.1.1	Par. 2.1.2	Hz				
P3.3	Direction (on keypad)	0	1		0		123	**0** = Forward **1** = Reverse
R3.4	Stop button	0	1		1		114	**0** = Limited function of Stop button **1** = Stop button always enabled

7.3.3.1 Selection of control place

There are three different places (sources) which the AC drive can be controlled from. For each control place, a different symbol will appear on the alphanumeric display:

Control place	symbol
I/O terminals	I/O term
Keypad (panel)	Keypad
Fieldbus	Bus/Comm

Change the control place by entering the edit mode with the Menu button right. The options can then be browsed through with the Browser buttons. Select the desired control place with the Enter button. See the diagram on the next page.

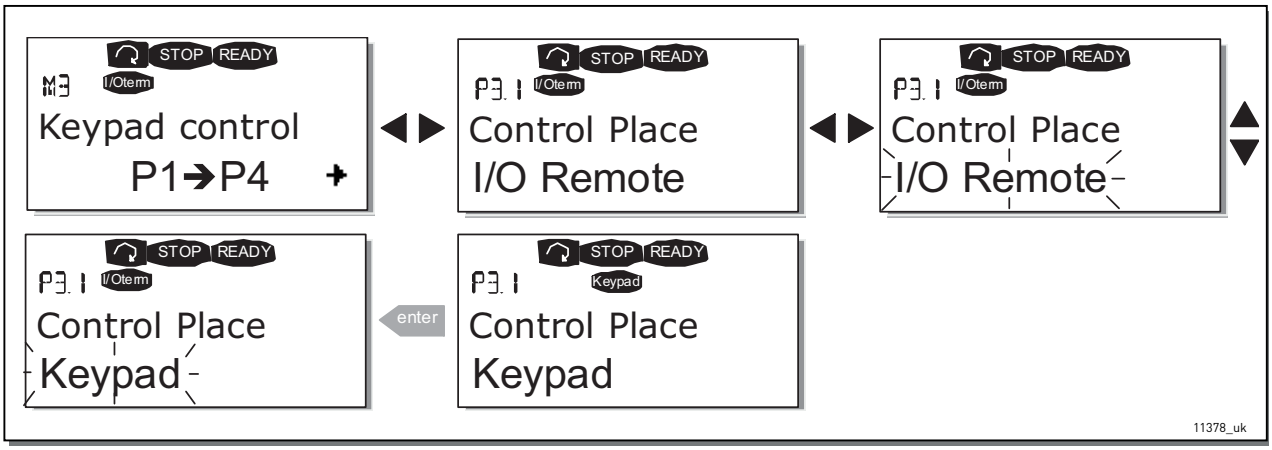

Figure 65. Selection of control place

7.3.3.2 Keypad reference

The keypad reference submenu (P3.2) displays and allows the operator to edit the frequency reference. The changes will take place immediately. This reference value will not, however, influence the rotation speed of the motor unless the keypad has been selected as source of reference.

NOTE! The maximum difference in RUN mode between the output frequency and the keypad reference is 6 Hz. See also Chapter 7.3.3.4 below.

See Figure 64 for how to edit the reference value (pressing the Enter button is not, however, necessary).

7.3.3.3 Keypad direction

The keypad direction submenu displays and allows the operator to change the rotating direction of the motor. This setting will not, however, influence the rotation direction of the motor unless the keypad has been selected as the active control place.

See also Chapter 7.3.3.4 below.

See Figure 65 for how to change the rotation direction.

NOTE! Additional Information on controlling the motor with the keypad is given in Chapter 7.2.1 and Chapter 8.2.

7.3.3.4 Stop button activated

By default, pushing the STOP button will always stop the motor regardless of the selected control place. You can disable this function by giving parameter 3.4 the value 0. If the value of this parameter

Local contacts: http://drives.danfoss.com/danfoss-drives/local-contacts/

is 0, the STOP button will stop the motor only when the keypad has been selected as the active control place.

NOTE! There are some special functions that can be performed when in the M3 menu:

Select the keypad as the active control place by keeping the Start button pushed down for 3 seconds when the motor is running. The keypad will become the active control place and the current frequency reference and direction will be copied to the keypad.

Select the keypad as the active control place by keeping the Stop button pushed down for 3 seconds when the motor is stopped. The keypad will become the active control place and the current frequency reference and direction will be copied to the keypad.

Copy the frequency reference set elsewhere (I/O, fieldbus) to the panel by keeping the

enter pushed down for 3 seconds.

Note that if you are in any other than M3 menu these functions will not work.

If you are in some other than M3 menu and try to start the motor by pressing the START button when the keypad is not selected as the active control place you will get an error message Keypad Control NOT ACTIVE.

7.3.4 ACTIVE FAULTS MENU (M4)

The Active faults menu can be entered from the Main menu by pushing the Menu button right when the location indication M4 is visible on the first line of the keypad display.

When a fault brings the AC drive to a stop, the location indication F1, the fault code, a short description of the fault and the fault type symbol (see Chapter 7.3.4.1) will appear on the display. In addition, the indication FAULT or ALARM (see Figure 60 or Chapter 7.1.1) is displayed and, in case of a FAULT, the red led on the keypad starts to blink. If several faults occur simultaneously, the list of active faults can be browsed with the Browser buttons.

The memory of active faults can store the maximum of 10 faults in the order of appearance. The display can be cleared with the Reset button and the read-out will return to the same state it was before the fault trip. The fault remains active until it is cleared with the Reset button or with a reset signal from the I/O terminal or fieldbus.

NOTE! Remove external Start signal before resetting the fault to prevent unintentional restart of the drive.

Normal state, no faults:



11379_uk

7.3.4.1 Fault types

In the VACON® NX AC drive, there are four different types of faults. These types differ from each other on the basis of the subsequent behaviour of the drive. See Table 51.

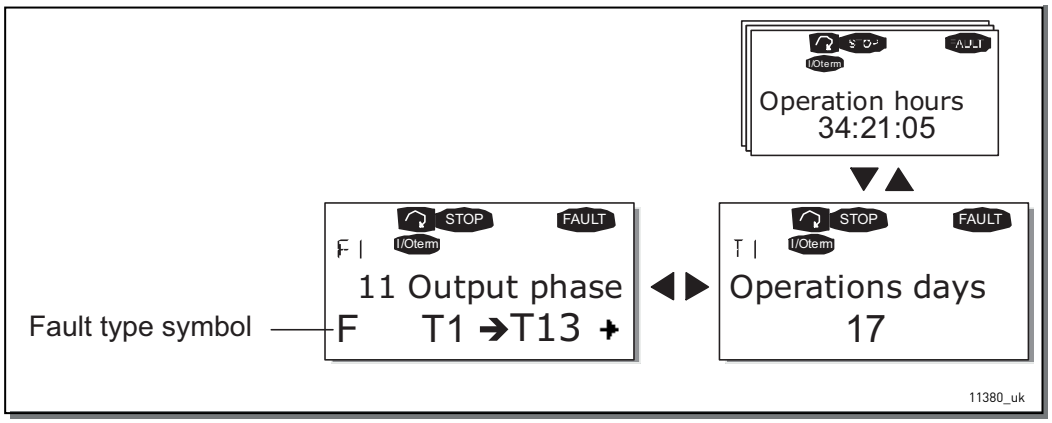

Figure 66. Fault display

Table 51. Fault types

Fault type symbol	Meaning
A (Alarm)	This type of fault is a sign of an unusual operating condition. It does not cause the drive to stop, nor does it require any special actions. The 'A fault' remains in the display for about 30 seconds.
F (Fault)	An 'F fault' is a kind of fault that makes the drive stop. Actions need to be taken in order to restart the drive.
AR (Fault Autoreset)	If an 'AR fault' occurs the drive will also stop immediately. The fault is reset automatically and the drive tries to restart the motor. Finally, if the restart is not successful, a fault trip (FT, see below) occurs.
FT (Fault Trip)	If the drive is unable to restart the motor after an AR fault an FT fault occurs. The effect of the 'FT fault' is basically the same as that of the F fault: the drive is stopped.

7.3.4.2 Fault codes

The fault codes, their causes and correcting actions are presented in Table 60. The shadowed faults are A faults only. The items written in white on black background present faults for which you can program different responses in the application. See parameter group Protections.

NOTE! When contacting distributor or factory because of a fault condition, always write down all texts and codes on the keypad display.

7.3.4.3 Fault time data record

When a fault occurs the information described above in is displayed. By pushing the Menu button right here you will enter the Fault time data record menu indicated by T.1→T.13. In this menu, some selected important data valid at the time of the fault are recorded. This feature is intended to help the user or the service person to determine the cause of fault.

The data available are:

Table 52. Fault time recorded data

T.1	Counted operation days (Fault 43: Additional code)	d
T.2	Counted operation hours (Fault 43: Counted operation days)	hh:mm:ss (d)
T.3	Output frequency (Fault 43: Counted operation hours)	Hz (hh:mm:ss)
T.4	Motor current	A
T.5	Motor voltage	V
T.6	Motor power	%
T.7	Motor torque	%
T.8	DC voltage	V
T.9	Unit temperature	°C
T.10	Run status	
T.11	Direction	
T.12	Warnings	
T.13	0-speed*	
* Tells the user if the drive was at zero speed (< 0.01 Hz) when the fault occurred		

Real time record

If real time is set to run on the AC drive the data items T1 and T2 will appear as follows:

T.1	Counted operation days	yyyy-mm-dd
T.2	Counted operation hours	hh:mm:ss,sss

7.3.5 FAULT HISTORY MENU (M5)

The Fault history menu can be entered from the Main menu by pushing the Menu button right when the location indication M5 is visible on the first line of the keypad display. Find the fault codes in Table 60.

All faults are stored in the Fault history menu in which you can browse through them using the Browser buttons. Additionally, the Fault time data record pages are accessible at each fault. You can return to the previous menu anytime by pushing the Menu button left.

The memory of the AC drive can store a maximum of 30 faults in the order of appearance. The number of faults currently in the fault history is shown on the value line of the main page (H1→H#).

The order of the faults is indicated by the location indication in the upper left corner of the display. The latest fault carries the indication F5.1, the second latest F5.2 etc. If there are 30 uncleared faults in the memory the next occurring fault will erase the oldest from the memory.

Pressing the Enter button for about 2 to 3 seconds resets the whole fault history. Then, the symbol H# will change to 0.

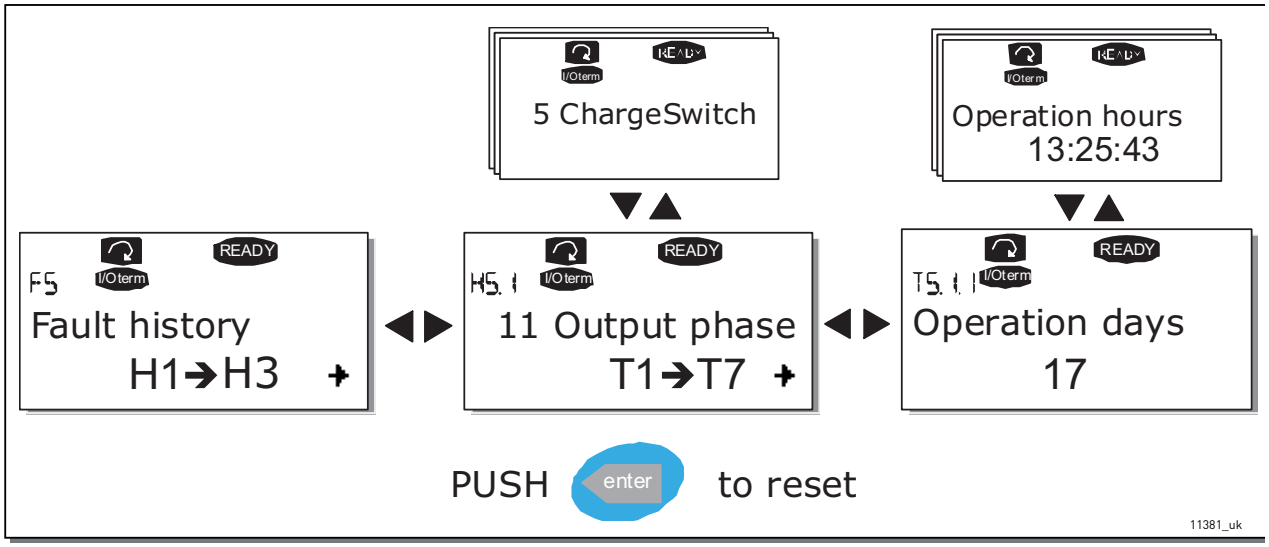

Figure 67. Fault history menu

7.3.6 SYSTEM MENU (M6)

The System menu can be entered from the main menu by pushing the Menu button right when the location indication M6 is visible on the display.

The controls associated with the general use of the AC drive, such as application selection, customised parameter sets or information about the hardware and software are located under the System menu. The number of submenus and subpages is shown with the symbol S (or P) on the value line.

On page 129 you will find a list of the functions available in the System menu.

Functions in the System menu

Table 53. System menu functions

Code	Function	Min	Max	Unit	Default	Cust	Selections
S6.1	Language selection				English		Available selections depend on the language package.
S6.2	Application selection				Basic Applica-tion		Basic Application Standard Application Local/Remote control Appl. Multi-Step Application PID Control Application Multi-Purpose Control Appl. Pump and Fan Control Appl.
S6.3	Copy parameters						
S6.3.1	Parameter sets						Store set 1 Load set 1 Store set 2 Load set 2 Load factory defaults
S6.3.2	Load up to keypad						All parameters
S6.3.3	Load down from keypad						All parameters All but motor parameters Application parameters
P6.3.4	Parameter backup				Yes		Yes No
S6.4	Compare parameters						
S6.4.1	Set1				Not used		
S6.4.2	Set2				Not used		
S6.4.3	Factory settings						
S6.4.4	Keypad set						
S6.5	Security						
S6.5.1	Password				Not used		0 = Not used
P6.5.2	Parameter lock				Change Enabled		Change Enabled Change Disabled
S6.5.3	Start-up wizard						No Yes
S6.5.4	Multimonitoring items						Change Enabled Change Disabled
S6.6	Keypad settings						
P6.6.1	Default page						
P6.6.2	Default page/ Operating menu						
P6.6.3	Timeout time	0	65535	s	30		
P6.6.4	Contrast	0	31		18		
P6.6.5	Backlight time	Always	65535	min	10		
S6.7	Hardware settings						
P6.7.3	HMI acknowledg. timeout		200			5000	
P6.7.4	HMI number of retries		1			10	
S6.8	System information						

Table 53. System menu functions

Code	Function	Min	Max	Unit	Default	Cust	Selections
S6.8.1	Total counters						
C6.8.1.1	MWh counter						
C6.8.1.2	Power On day counter						
C6.8.1.3	Power On hours counter						
S6.8.2	Trip counters						
T6.8.2.1	MWh counter			kWh			
T6.8.2.2	Clear MWh trip counter						
T6.8.2.3	Operating days trip counter						
T6.8.2.4	Operating hours trip counter			hh:mm:ss			
T6.8.2.5	Clear operating time counter						
S6.8.3	Software info						
S6.8.3.1	Software package						
S6.8.3.2	System software version						
S6.8.3.3	Firmware interface						
S6.8.3.4	System load						
S6.8.4	Applications						
S6.8.4.#	Name of application						
D6.8.4.#.1	Application ID						
D6.8.4.#.2	Applications: Version						
D6.8.4.#.3	Applications: Firmware interface						
S6.8.5	Hardware						
I6.8.5.1	Info: Power unit type code						
I6.8.5.2	Info: Unit voltage			V			
I6.8.5.3	Info: Brake chopper						
I6.8.5.4	Info: Brake resistor						
S6.8.6	Expander boards						
S6.8.7	Debug menu						For Application programming only. Contact factory for more details.

7.3.6.1 Language selection

The VACON® control keypad offers you the possibility to control the AC drive through the keypad in the language of your choice.

Locate the language selection page under the System menu. Its location indication is S6.1. Press the Menu button right once to enter the edit mode. As the name of the language starts to blink you are able to choose another language for the keypad texts. Confirm the selection by pushing the Enter button. The blinking stops and all textual information on the keypad is presented in the language you chose.

You can return to the previous menu anytime by pushing the Menu button left.

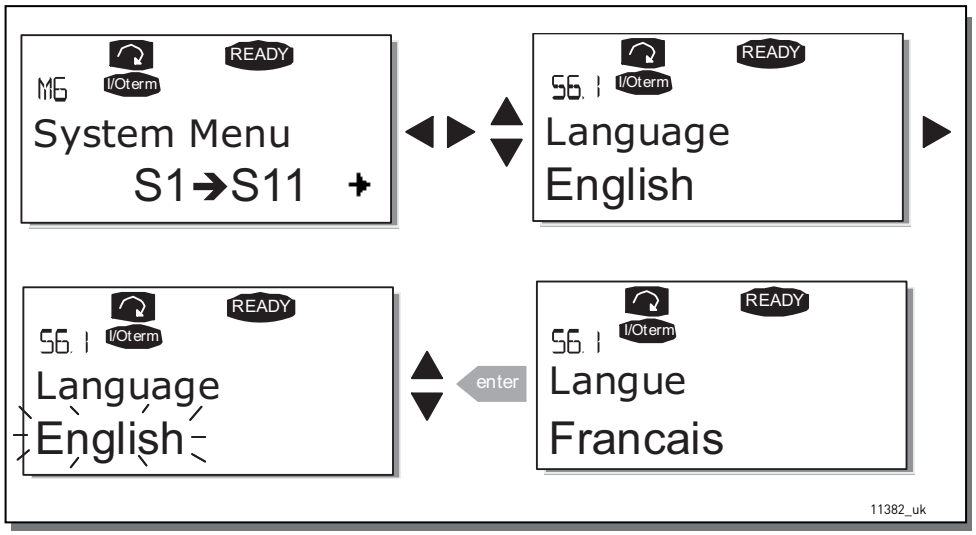

Figure 68. Selection of language

7.3.6.2 Application selection

The user can select the application desired by entering the Application selection page (S6.2). This is done by pushing the Menu button right when on the first page of the System menu. Change then the application by pushing the Menu button right once again. The name of the application starts to blink. Now you can browse through the applications with the Browser buttons and select another application with the Enter button.

Changing application will reset all parameters. After application change, you will be asked if you want the parameters of the new application to be uploaded to the keypad. If you wish this to happen push the Enter button Pushing any other button leaves the parameters of the previously used application saved in the keypad. For more information, see Chapter 7.3.6.3.

For more information about the Application Package, see VACON® NX All-in-One Application Manual.

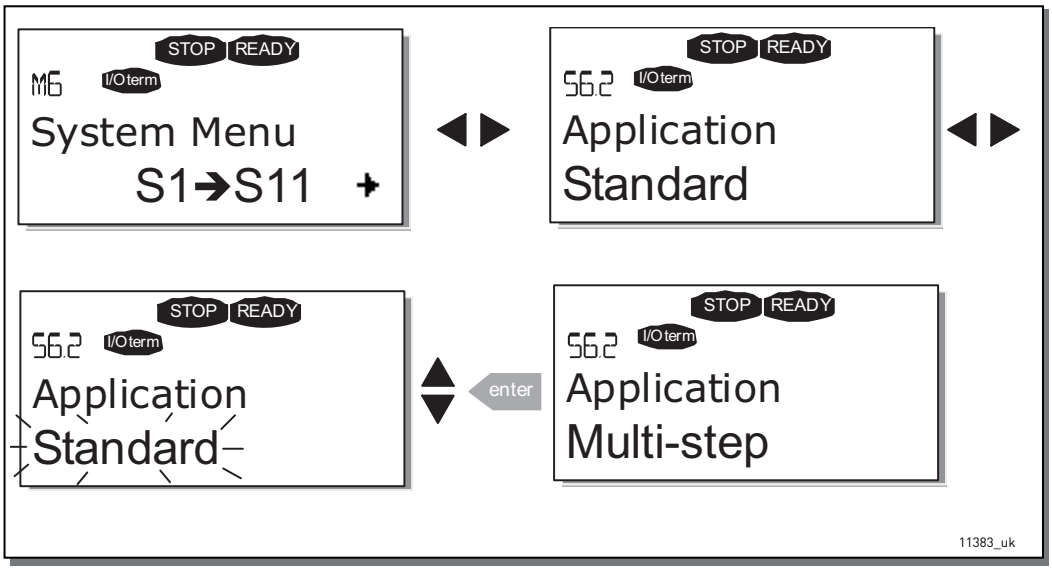

Figure 69. Change of application

7.3.6.3 Copy parameters

The parameter copy function is used when the operator wants to copy one or all parameter groups from one drive to another or to store parameter sets in the internal memory of the AC drive. All the parameter groups are first uploaded to the keypad, then the keypad is connected to another drive and then the parameter groups are downloaded to it (or possibly back to the same drive).

Before any parameters can successfully be copied from one drive to another the drive has to be stopped when the parameters are downloaded to it:

The parameter copy menu (S6.3) embodies four functions:

Parameter sets (S6.3.1)

The VACON® NX AC drive features a possibility for the user to load back the factory default parameter values and to store and load two customised parameter sets (all parameters included in the application).

On Parameter sets page (S6.3.1), push the Menu button right to enter the Edit menu. The text LoadFactDef begins to blink and you can confirm the loading of factory defaults by pushing the Enter button. The drive resets automatically.

Alternatively you can choose any other of the storing or loading functions with the Browser buttons. Confirm with the Enter button. Wait until 'OK' appears on the display.

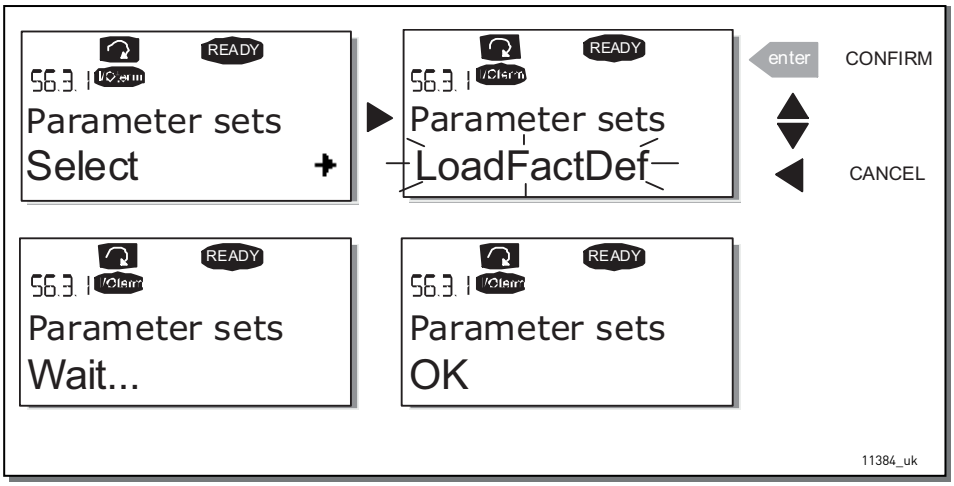

Figure 70. Storing and loading of parameter sets

Upload parameters to keypad (To keypad, S6.3.2)

This function uploads all existing parameter groups to the keypad provided that the drive is stopped.

Enter the To keypad page (S6.3.2) from the Parameter copy menu. Push the Menu button right to enter the edit mode. Use the Browser buttons to select the option All parameters and press the Enter button. Wait until 'OK' appears on the display.

Local contacts: http://drives.danfoss.com/danfoss-drives/local-contacts/

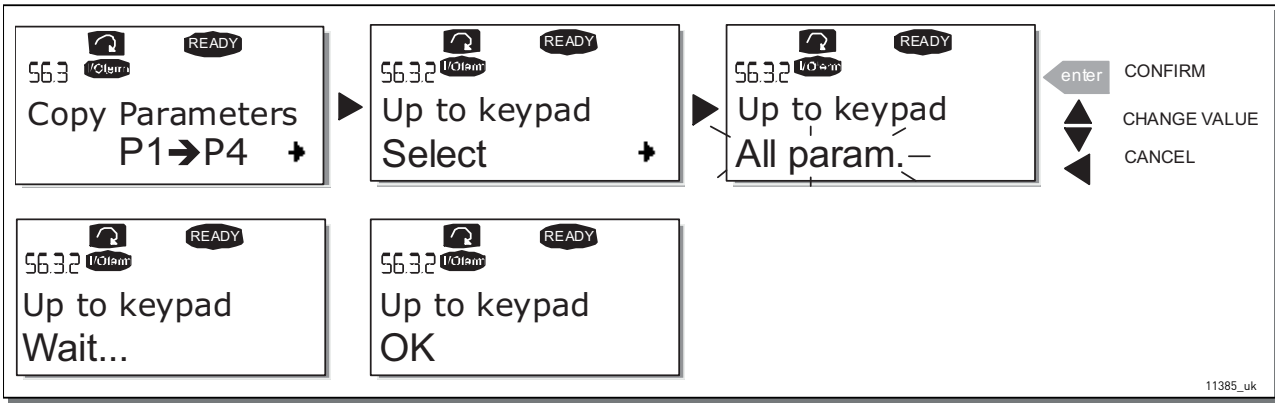

Figure 71. Parameter copy to keypad

Download parameters to drive (From keypad, S6.3.3)

This function downloads one or all parameter groups uploaded to the keypad to a drive provided that the drive is in STOP status.

Enter the From keypad page (S6.3.3) from the Parameter copy menu. Push the Menu button right to enter the edit mode. Use the Browser buttons to select either the option All parameters or Application parameters and press the Enter button. Wait until 'OK' appears on the display.

The procedure to download the parameters from keypad to drive is similar to that of from drive to keypad. See above.

Automatic parameter backup (P6.3.4)

On this page you can activate or inactivate the parameter backup function. Enter the edit mode by pressing the Menu button right. Choose Yes or No with the Browser buttons.

When the Parameter backup function is activated VACON® NX control keypad makes a copy of the parameters of the presently used application. Every time a parameter is changed the keypad backup is automatically updated.

When applications are changed, you will be asked if you wish the parameters of the new application to be uploaded to the keypad. For this to happen, push the Enter button. If you wish to keep the copy of the parameters of the previously used application saved in the keypad push any other button. Now you will be able to download these parameters to the drive following the instructions given in Chapter 7.3.6.3.

If you want the parameters of the new application to be automatically uploaded to the keypad you have to do this for the parameters of the new application once on page 6.3.2 as instructed. Otherwise the panel will always ask for the permission to upload the parameters.

NOTE! Parameters saved in the parameter settings on page S6.3.1 will be deleted when applications are changed. If you want to transfer the parameters from one application to another you have to upload them first to the keypad.

7.3.6.4 Parameter comparison

In the Parameter comparison submenu (S6.4), you can compare the actual parameter values to the values of your customised parameter sets and those loaded to the control keypad.

The comparison is performed by pushing the Menu button right when in the Compare parameters submenu. The actual parameter values are first compared to those of the customised parameter Set1. If no differences are detected a '0' is displayed on the lowermost line. But if any of the parameter values differ from those of the Set1 the number of the deviations is displayed together

with symbol P (e.g. P1→P5 = five deviating values). By pressing the Menu button right once again you can still enter the pages where you can see both the actual value and the value it was compared to. In this display, the value on the Description line (in the middle) is the default value and the one on the value line (lowermost) is the edited value. Furthermore, you can also edit the actual value with the Browser buttons in the edit mode that you can reach by pushing the Menu button right once again.

In the same way, you can perform the comparison of the actual values to Set2, Factory Settings and Keypad Set.

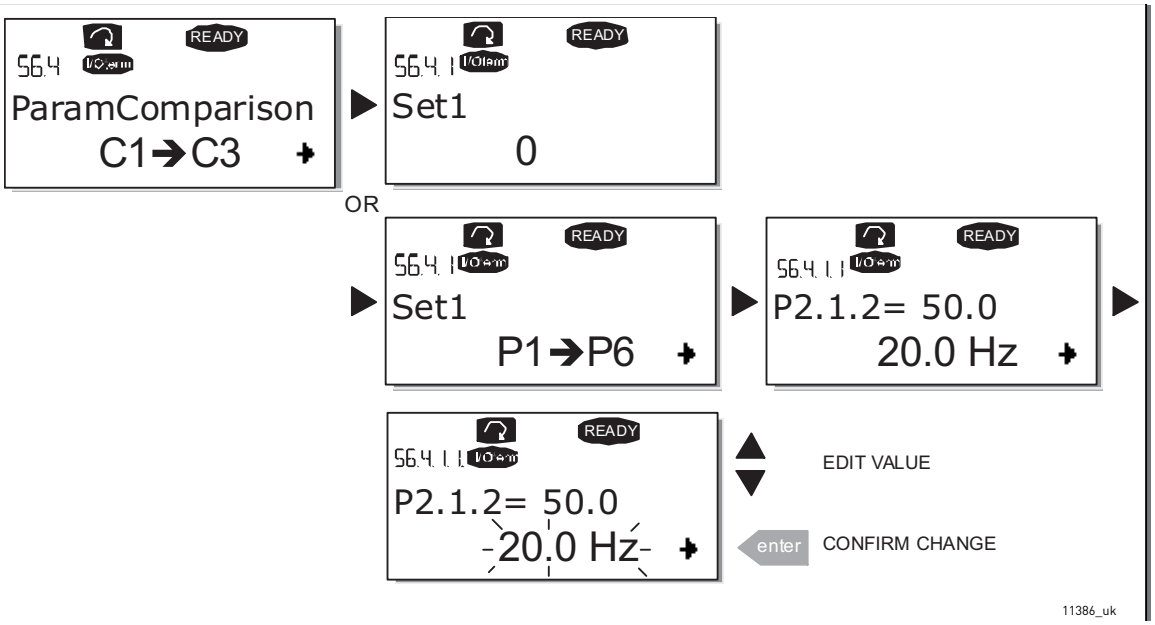

Figure 72. Parameter comparison

7.3.6.5 Security

NOTE! The Security submenu is protected with a password. Store the password in a safe place!

Password (S6.5.1)

The application selection can be protected against unauthorised changes with the Password function (S6.5.1).

By default, the password function is not in use. If you want to activate the function, enter the edit mode by pushing the Menu button right. A blinking zero appears in the display and now you can set a password with the Browser buttons. The password can be any number between 1 and 65535.

NOTE! that you can also set the password by digits. In the edit mode, push the Menu button right once again and another zero appears on the display. Now set first the units. Then push the Menu button left and you can set the tens etc. Finally, confirm the password setting with the Enter button. After this, you have to wait until the Timeout time (P6.6.3) (see page 137) has expired before the password function is activated.

If you now try to change applications or the password itself you will be prompted for the current password. The password will be entered with the Browser buttons.

Deactivate the password function by entering the value **0**.

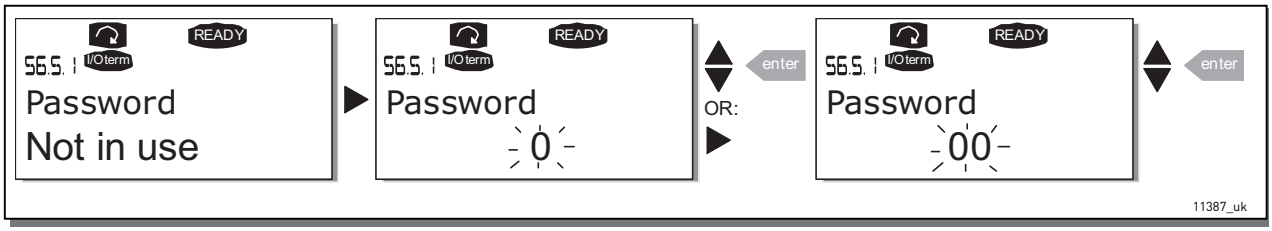

Figure 73. Password setting

NOTE! Store the password in a secure location! No changes can be made unless a valid password is entered!

Parameter lock (P6.5.2)

This function allows the user to prohibit changes to the parameters.

If the parameter lock is activated the text *locked* will appear on the display if you try to edit a parameter value.

NOTE! This function does not prevent unauthorised editing of parameter values.

Enter the edit mode by pushing the Menu button right. Use the Browser buttons to change the parameter lock status. Accept the change with the Enter button or return to the previous level with the Menu button left.

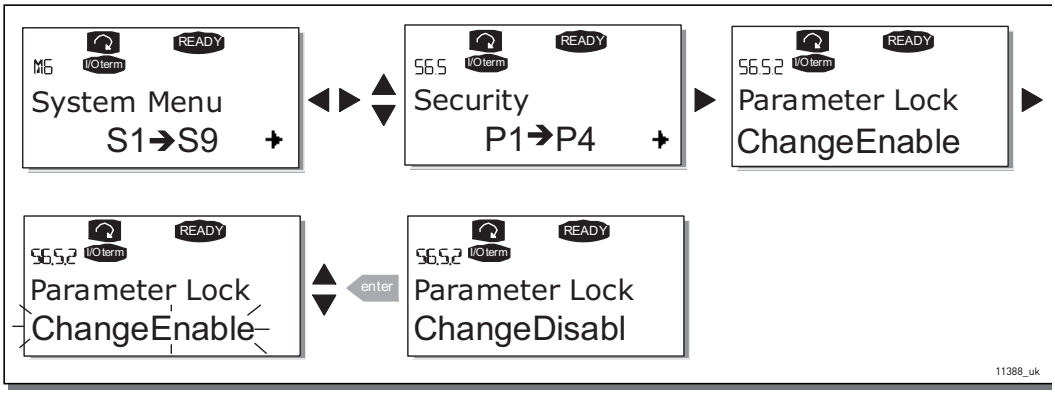

Figure 74. Parameter locking

Start-up Wizard (P6.5.3)

The Start-up Wizard is a feature on the control keypad to facilitate the commissioning of the AC drive. If selected active (default), the Start-up Wizard prompts the operator for the language and application of his/her choice plus for the values for a set of parameters common to all applications as well as for a set of application-dependent parameters.

Always accept the value with the Enter button, scroll options or change values with the Browser buttons (up and down arrows).

Set the Start-up Wizard active in the following way: In the System Menu, find page P6.5.3. Press the Menu button right once to reach the edit mode. Use the Browser buttons to set value Yes and confirm the selection with the Enter button. If you want to deactivate the function follow the same procedure and give the parameter value No.



Figure 75. Activation of Start-up wizard

Multimonitoring items (P6.5.4)

VACON® alpha-numeric keypad features a display where you can monitor even three actual values at the same time (see Chapter 7.3.1 and Chapter Monitoring values in the manual of the application you are using). On page P6.5.4 of the System Menu you can define if it is possible for the operator to replace the values monitored with other values. See below.

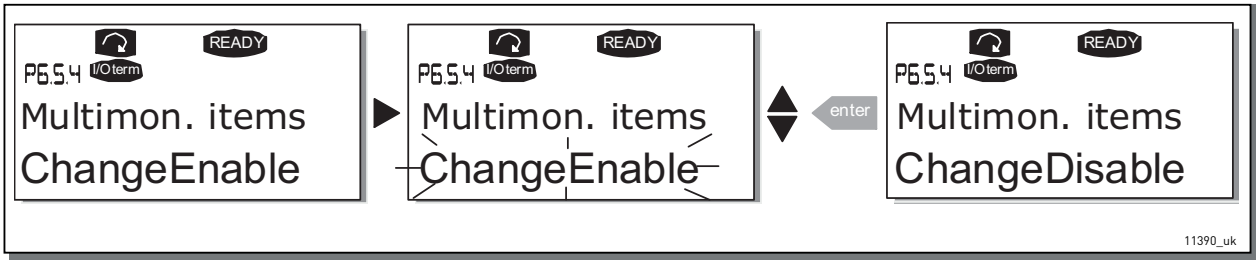

Figure 76. Enabling the change of multimonitoring items

7.3.6.6 Keypad settings

In the Keypad settings submenu under the System menu you can further customise your AC drive operator interface.

Locate the Keypad settings submenu (S6.6). Under the submenu, there are four pages (P#) associated with the keypad operation:

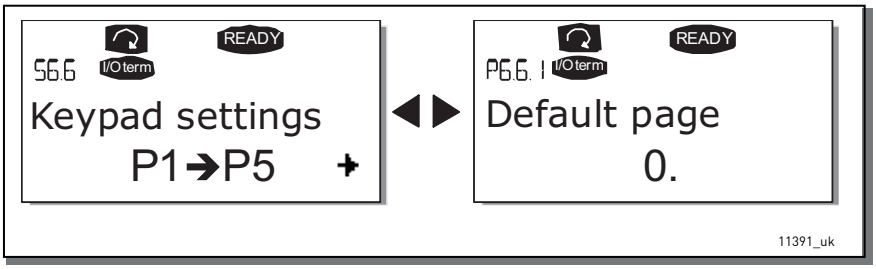

Figure 77. Keypad settings submenu

Default page (P6.6.1)

Here you can set the location (page) to which the display automatically moves as the Timeout time (see below) has expired or as the power is switched on to the keypad.

If the Default Page value is 0 the function is not activated, i.e. the last displayed page remains on the keypad display. Press the Menu button right once to enter the edit mode. Change the number of the Main menu with the Browser buttons. Pressing the Menu button right once again makes you able to edit the number of the submenu/page. If the page you want to move to by default is at the third level

repeat the procedure. Confirm the new default page value with the Enter button. You can return to the previous step anytime by pushing the Menu button left.

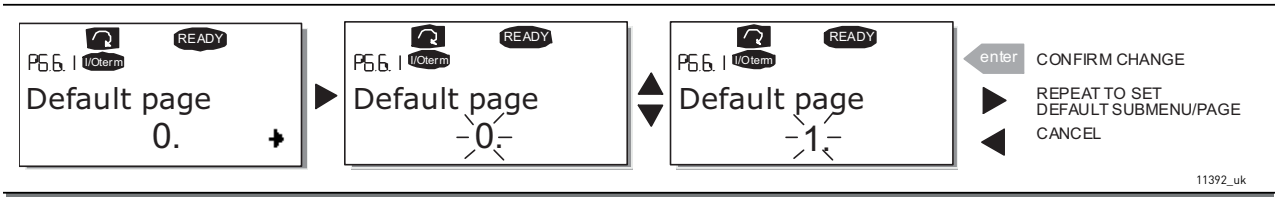

Figure 78. Default page function

Default page in the operating menu (P6.6.2)

Here you can set the location (page) in the Operating menu (in special applications only) to which the display automatically moves as the set Timeout time (see below) has expired or as the power is switched on to the keypad. See setting of Default page above.

Timeout time (P6.6.3)

The Timeout time setting defines the time after which the keypad display returns to the Default page (P6.6.1) see above.

Move to the Edit menu by pressing the Menu button right. Set the timeout time you want and confirm the change with the Enter button. You can return to the previous step anytime by pushing the Menu button left.

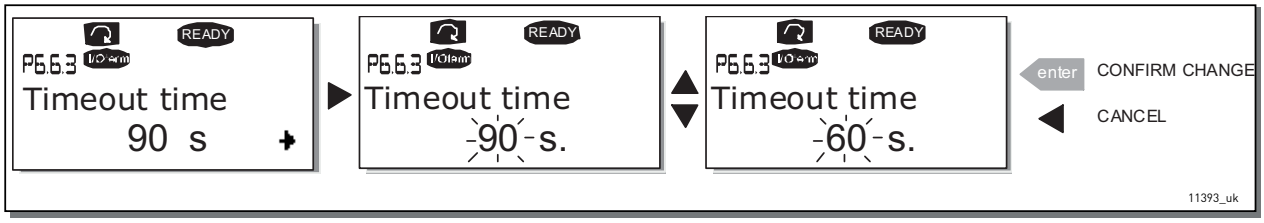

Figure 79. Timeout time setting

NOTE! If the Default page value is 0 the Timeout time setting has no effect.

Contrast adjustment (P6.6.4)

In case the display is unclear you can adjust its contrast through the same procedure as that for the timeout time setting (see above).

Backlight time (P6.6.5)

Giving a value for the Backlight time, you can determine how long the backlight stays on before going out. You can select here any time between 1 and 65535 minutes or 'Forever'. For the value setting procedure see Timeout time (P6.6.3).

7.3.6.7 Hardware settings

NOTE! The Hardware settings submenu is protected with a password (see Chapter Password (S6.5.1)). Store the password in a safe place!

In the Hardware settings submenu (S6.7) under the System menu you can further control some functions of the hardware in your AC drive. The functions available in this menu are HMI acknowledge timeout and HMI retry.

HMI acknowledge timeout (P6.7.3)

This function allows the user to change the timeout of the HMI acknowledgement time in cases where there is an additional delay in the RS-232 transmission due to use of modems for communication over longer distances, for example.

NOTE! If the AC drive has been connected to the PC with a normal cable, the default values of parametres 6.7.3 and 6.7.4 (200 and 5) must not be changed.

If the AC drive has been connected to the PC via a modem and there is delay in transferring messages, the value of par. 6.7.3 must be set according to the delay as follows:

Example:

- Transfer delay between the AC drive and the PC = 600 ms
- The value of par. 6.7.3 is set to 1200 ms (2 x 600, sending delay + receiving delay)
- The corresponding setting must be entered in the [Misc]-part of the file NCDrive.ini:

  Retries = 5

  AckTimeOut = 1200

  TimeOut = 6000

It must also be considered that intervals shorter than the AckTimeOut-time cannot be used in NC-Drive monitoring.

Enter the edit mode by pushing the Menu button right. Use the Browser buttons to change the acknowledgement time. Accept the change with the Enter button or return to the previous level with the Menu button left.

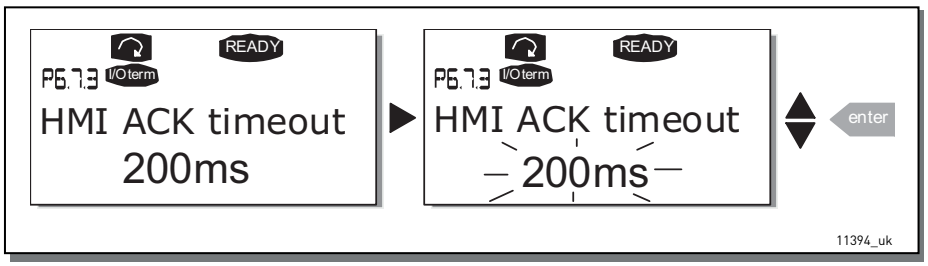

Figure 80. HMI acknowledge timeout

Number of retries to receive HMI acknowledgement (P6.7.4)

With this parameter you can set the number of times the drive will try receive acknowledgement if this does not succeed within the acknowledgement time (P6.7.3) or if the received acknowledgement is faulty.

Enter the edit mode by pushing the Menu button right. The present value shown starts to blink. Use the Browser buttons to change the amount of retries. Accept the change with the Enter button or return to the previous level with the Menu button left.

See Figure 80 for the procedure of changing the value.

7.3.6.8 System info

In the System info submenu (S6.8) you can find AC drive-related hardware and software information as well as operation-related information.

Total counters (S6.8.1)

In the Total counters page (S6.8.1) you can find information related to the AC drive operation times, i.e. the total numbers of MWh, operation days and operation hours passed so far. Unlike the counters in the Trip counters, these counters cannot be reset.

NOTE! The Power On time counter (days and hours) runs always, when the power is on.

Table 54. Counter pages

Page	Counter	Example
C6.8.1.1.	MWh counter	
C6.8.1.2.	Power On day counter	Value on display is 1.013. The drive has operated for 1 year and 13 days.
C6.8.1.3.	Power On hour counter	Value on display is 7:05:16. The drive has operated for 7 hours 5 minutes and 16 seconds.

Trip counters (S6.8.)

Trip counters (menu S6.8.2) are counters the values of which can be reset i.e. restored to zero. You have the following resettable counters at your disposal. See Table 54 for examples.

NOTE! The trip counters run only when the motor is running.

Table 55. Resettable counters

Page	Counter
T6.8.2.1	MWh counter
T6.8.2.3	Operation day counter
T6.8.2.4	Operation hour counter

The counters can be reset on pages 6.8.2.2 (Clear MWh counter) and 6.8.2.5 (Clear Operation time counter).

Example: When you want to reset the operation counters you should do the following:

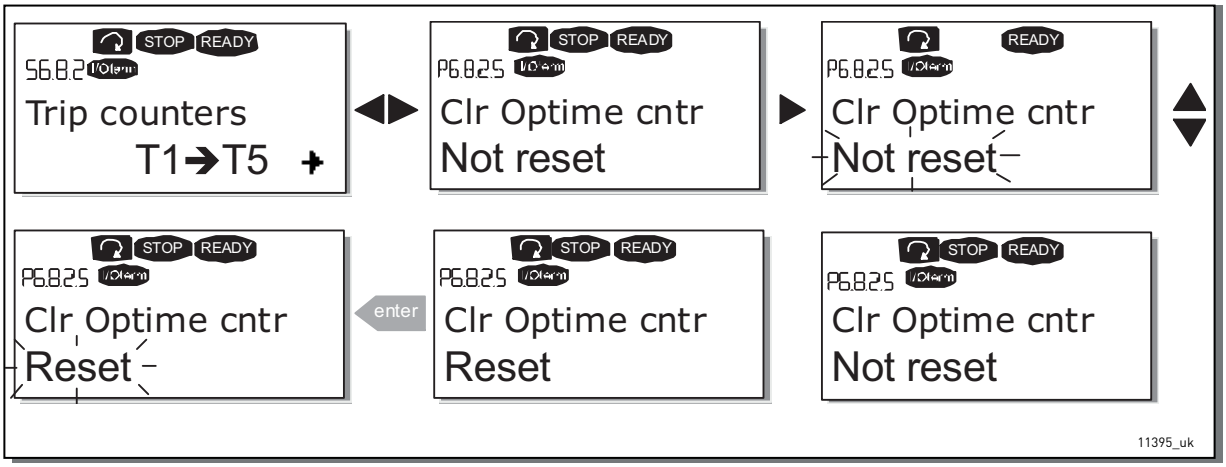

Figure 81. Counter reset

Software (S6.8.3)

The Software information page includes information on the following AC drive software related topics:

Table 56. Software information pages

Page	Content
6.8.3.1	Software package
6.8.3.2	System software version
6.8.3.3	Firmware interface
6.8.3.4	System load

Applications (S6.8.4)

At location S6.8.4 you can find the Applications submenu containing information about not only the application currently in use but also all other applications loaded into the AC drive. The information available is:

Table 57. Applications information pages

Page	Content
6.8.4.#	Name of application
6.8.4.#.1	Application ID
6.8.4.#.2	Version
6.8.4.#.3	Firmware interface

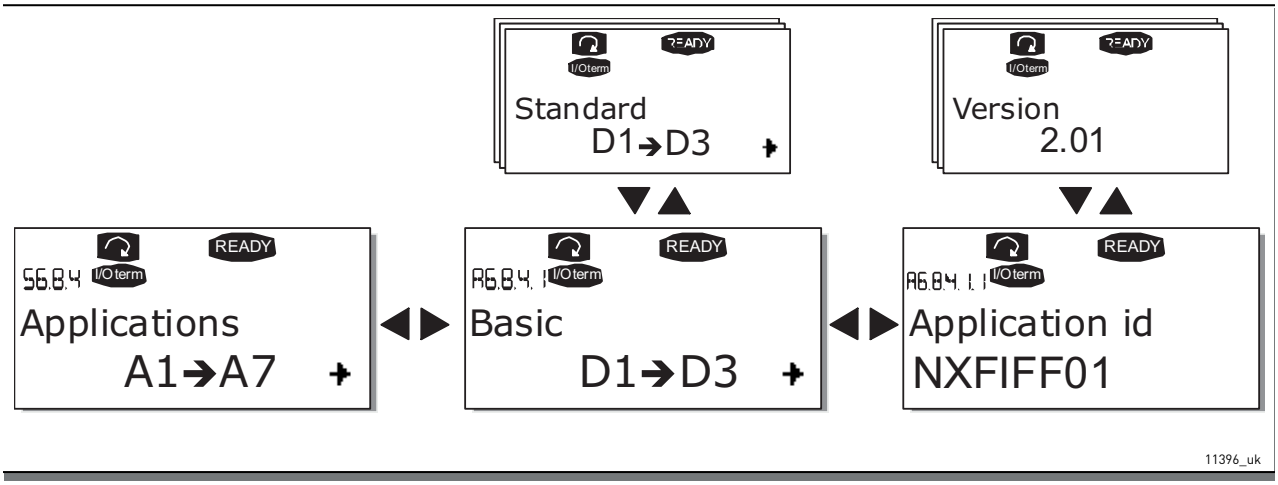

Figure 82. Applications info page

In the Applications information page, push the Menu button right to enter the Application pages of which there are as many as there are applications loaded into the AC drive. Locate the application you want information about with the Browser buttons and then enter the Information pages with the Menu button right. Use again the Browser buttons to see the different pages.

Hardware (S6.8.5)

The Hardware information page provides information on the following hardware-related topics:

Table 58. Hardware information pages

Page	Content
6.8.5.1	Power unit type code
6.8.5.2	Nominal voltage of the unit
6.8.5.3	Brake chopper
6.8.5.4	Brake resistor

Expander boards (S6.8.6)

In the Expander boards pages you find information about the basic and option boards connected to the control board (see Chapter 6.1.2).

You can check the status of each board slot by entering the Expander boards page with the Menu button right and using the Browser buttons to choose the board whose status you wish to check. Push the Menu button right again to display the status of the board. The keypad will also display the program version of the respective board when you push either one of the Browser buttons.

If no board is connected to the slot the text 'no board' will be shown. If a board is connected to a slot but the connection is somehow lost the text 'no conn.' is displayed. See Chapter 6.2 and Figure 41 and Figure 50 for more information.

For more information on the expander board-related parameters, see Chapter 7.3.7.

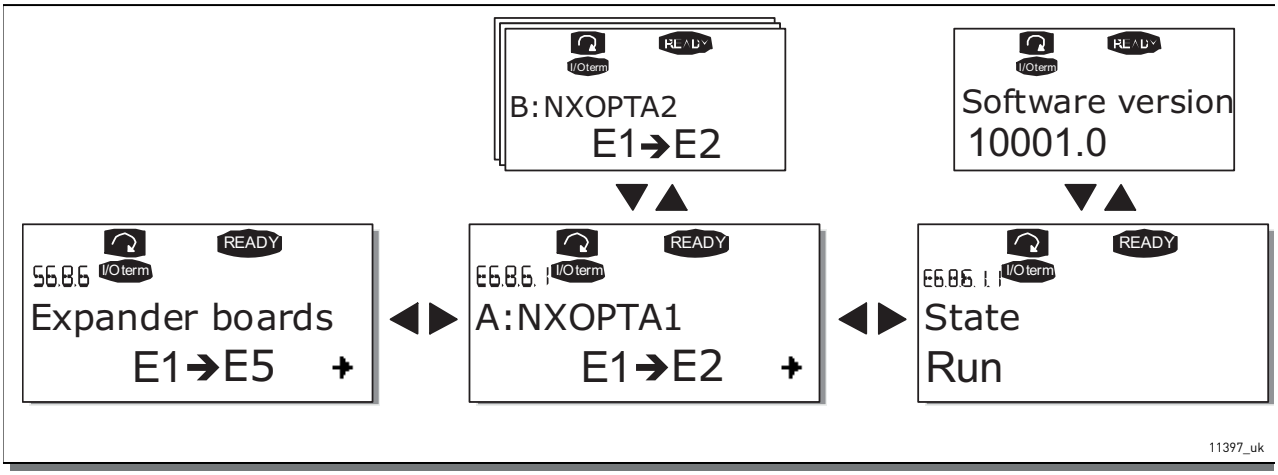

Figure 83. Expander board information menus

Debug menu (S6.8.7)

This menu is meant for advanced users and application designers. Contact factory for any assistance needed.

7.3.7 EXPANDER BOARD MENU (M7)

The Expander board menu makes it possible for the user 1) to see what expander boards are connected to the control board and 2) to reach and edit the parameters associated with the expander board.

Enter the following menu level (G#) with the Menu button right. At this level, you can browse through slots (see page 84) A to E with the Browser buttons to see what expander boards are connected. On the lowermost line of the display you also see the number of parameters associated with the board. You can view and edit the parameter values in the same way as described in Chapter 7.3.2. See Table 59 and Figure 84.

Expander board parameters

Table 59. Expander board parameters (board OPT-A1)

Code	Parameter	Min	Max	Default	Cust	Selections
P7.1.1.1	AI1 mode	1	5	3		**1** = 0...20 mA **2** = 4...20 mA **3** = 0...10 V **4** = 2...10 V **5** = –10...+10 V
P7.1.1.2	AI2 mode	1	5	1		See P7.1.1.1
P7.1.1.3	AO1 mode	1	4	1		**1** = 0...20 mA **2** = 4...20 mA **3** = 0...10 V **4** = 2...10 V

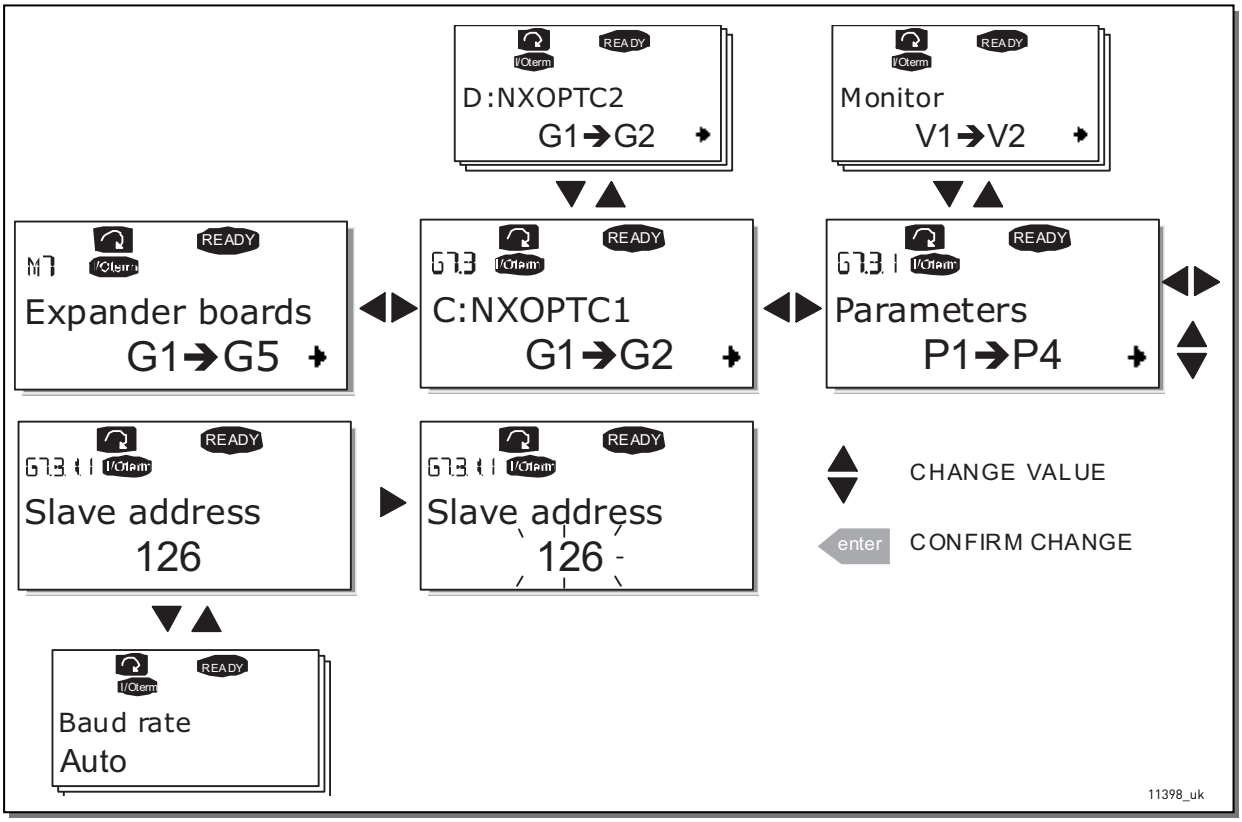

Figure 84. Expander board information menu

7.4 FURTHER KEYPAD FUNCTIONS

The VACON® NX control keypad embodies additional application-related functions. See VACON® NX Application Package for more information.

8. COMMISSIONING

8.1 SAFETY

Before commissioning, note the following directions and warnings:



Internal components and circuit boards of the AC drive are live when VACON® NX Liquid-Cooled drive is connected to mains potential. Coming into contact with this voltage is extremely dangerous and may cause death or severe injury.



The motor terminals U, V, W and the DC-link/brake resistor terminals B–, B+/R+, R– are live when VACON® NX Liquid-Cooled drive is connected to mains, even if the motor is not running.



The control I/O-terminals are isolated from the mains potential. However, the relay outputs and other I/O-terminals may have a dangerous control voltage present even when VACON® NX Liquid-Cooled drive is disconnected from mains.



Do not make any connections with the AC drive connected to the mains.



After having disconnected the AC drive from the mains, wait until the indicators on the keypad go out (if no keypad is attached see the indicator through the keypad base). Wait 5 more minutes before doing any work on VACON® NX Liquid-Cooled drive connections. Do not even open the cover before this time has expired.



Before connecting the NX Liquid-Cooled drive to mains, ensure the functionality of the coolant circulation and check the circulation for possible leaks.



Before connecting the drive to mains make sure that the switchgear enclosure door is closed.

8.2 COMMISSIONING OF THE AC DRIVE

1. Read carefully the safety instructions in Chapter 1 and follow them.

2. After the installation, pay attention:

   - that both the AC drive and the motor are grounded.
   - that the mains and motor cables comply with the requirements given in Chapter 6.1.1.
   - that the control cables are located as far as possible from the power cables and that the shields of the shielded cables are connected to protective earth ⏚. The wires may not touch the electrical components of the AC drive.
   - that the common inputs of digital input groups are connected to +24 V or ground of the I/O terminal or the external supply.

3. Check liquid cooling connections and system operation.
   - open the shut-off valves
   - check the quality and quantity of the cooling liquid (Chapter 5.2)
   - ensure the proper operation of liquid circulation system

4. Perform the cable and motor insulation checks, see Chapter 6.1.10.

5. Check the AC drive for condensation.

6. Check that all Start/Stop switches connected to the I/O terminals are in Stop-position.

7. Connect the AC drive to mains.

8. Set the parameters of group 1 (See VACON® All in One Application Manual) according to the requirements of your application. At least the following parameters should be set:

   - motor nominal voltage
   - motor nominal frequency
   - motor nominal speed
   - motor nominal current

   You will find the values needed for the parameters on the motor rating plate.

9. Perform run test without motor

   Perform either Test A or Test B:

A Controls from the I/O terminals:

   a) Turn the Start/Stop switch to ON position.
   b) Change the frequency reference (potentiometer).
   c) Check in the Monitoring menu (M1) that the value of Output frequency changes according to the change of frequency reference.
   d) Turn the Start/Stop switch to OFF position.

B Control from the control keypad:

   a) Change the control from the I/O terminals to the keypad as advised in Chapter 7.3.3.1.

Local contacts: http://drives.danfoss.com/danfoss-drives/local-contacts/

b) Push the Start button on the keypad.
c) Move over to the Keypad control menu (M3) and Keypad Reference submenu (Chapter 7.3.3.2) and change the frequency reference using the Browser buttons ▲ - + ▼
d) Check in the Monitoring menu (M1) that the value of Output frequency changes according to the change of frequency reference.
e) Push the Stop button on the keypad.

10. Run the start-up tests without the motor being connected to the process, if possible. If this is not possible, secure the safety of each test prior to running it. Inform your co-workers of the tests.

a) Switch off the supply voltage and wait up until the drive has stopped as advised at Chapter 8.1, step 5.
b) Connect the motor cable to the motor and to the motor cable terminals of the AC drive.
c) See to that all Start/Stop switches are in Stop positions.
d) Switch the mains ON
e) Repeat test 9A or 9B.

11. Connect the motor to the process (if the startup test was run without the motor being con nected).

a) Before running the tests, make sure that this can be done safely.
b) Inform your co-workers of the tests.
c) Repeat test 9A or 9B.

9. FAULT TRACING

9.1 FAULT CODES

When a fault is detected by the AC drive control electronics, the drive is stopped and the symbol F together with the ordinal number of the fault, the fault code and a short fault description appear on the display. The fault can be reset with the Reset button on the control keypad or via the I/O terminal. The faults are stored in the Fault history menu (M5) which can be browsed. The different fault codes you will find in the table below.

The fault codes, their causes and correcting actions are presented in the table below. The shadowed faults are A faults only. The faults written in white on black background may appear as both A and F fault.

Table 60. Fault codes

Fault code	Fault	Possible cause	Correcting measures
1	Overcurrent	AC drive has detected too high a current (> 4*IH) in the motor cable: - sudden heavy load increase - short circuit in motor cables - unsuitable motor Subcode in T.14: S1 = Hardware trip S3 = Current controller supervision	Check loading. Check motor. Check cables.
2	Overvoltage	The DC-link voltage has exceeded the limits defined in Table 9. - too short a deceleration time - high overvoltage spikes in supply Subcode in T.14: S1 = Hardware trip S2 = Overvoltage control supervision	Make the deceleration time longer. Use brake chopper or brake resistor (available for most chassis as options)
3	Earth fault	Current measurement has detected that the sum of motor phase current is not zero. - insulation failure in cables or motor	Check motor cables and motor.
5	Charging switch	The charging switch is open, when the START command has been given. - faulty operation - component failure	Reset the fault and restart. Should the fault re-occur, contact your local distributor.
6	Emergency stop	Stop signal has been given from the option board.	Check emergency stop circuit.

Local contacts: http://drives.danfoss.com/danfoss-drives/local-contacts/

Table 60. Fault codes

Fault code	Fault	Possible cause	Correcting measures
7	Saturation trip	Various causes: - defective component - brake resistor short-circuit or overload	Cannot be reset from the keypad. Switch off power. DO NOT RE-CONNECT POWER! Contact your local distributor. If this fault appears simultaneously with Fault 1, check motor cables and motor.
8	System fault	- component failure - faulty operation Note exceptional fault data record. Subcode in T.14: S1 = Feedback of motor voltage S2 = Reserved S3 = Reserved S4 = ASIC trip S5 = Disturbance in VaconBus S6 = Feedback of charging switch S7 = Charging switch S8 = No power to driver card S9 = Power unit communication (TX) S10 = Power unit communication (Trip) S11 = Power unit comm. (Measurement) S12 = Expander board (slot D or E) S30-S48 = OPT-AF board (slot B)	Reset the fault and restart. Should the fault re-occur, contact your local distributor.
9	Undervoltage	DC-link voltage is under the voltage limits defined in Table 9. - most probable cause: too low a supply voltage - AC drive internal fault Subcode in T.14: S1 = DC-link too low during run S2 = No data from power unit S3 = Undervoltage control supervision	In case of temporary supply voltage break reset the fault and restart the AC drive. Check the supply voltage. If it is adequate, an internal failure has occurred. Contact your local distributor.
10	Input line supervision	Input line phase is missing. Subcode in T.14: S1 = Phase supervision diode supply S2 = Phase supervision active front end	Check supply voltage, fuses and cable.
12	Brake chopper supervision	- no brake resistor installed - brake resistor is broken - brake chopper failure	Check brake resistor and cabling. If ok, the chopper is faulty. Contact your local distributor.
13	Frequency converter undertemperature	Heatsink temperature is under –10 °C.	

Table 60. Fault codes

Fault code	Fault	Possible cause	Correcting measures
14	Frequency converter overtemperature	3) Heatsink temperature is over 70 °C. Overtemperature warning is issued when the heatsink temperature exceeds 65 °C. 4) Circuit board temperature is over 85 °C. Overtemperature warning is issued when the board temperature exceeds 75 °C. Subcodes: S1 = Overtemperature warning in unit, board or phases S2 = Overtemperature in power board S3 = Liquid flow S4 = Overtemperature on ASIC board or driver boards	Cause 1): Check that values for Ith (Chapter 4.2) are not exceeded. Check the correct coolant flow and temperature. Also check the circulation for possible leaks. Check the ambient temperature. Make sure that the switching frequency is not too high in relation to ambient temperature and motor load. Cause 2): Circulation of air in the drive is blocked. The cooling fans are defect.
15	Motor stalled	Motor stall protection has tripped.	Check motor and load.
16	Motor overtemperature	Motor overheating has been detected by AC drive motor temperature model. Motor is overloaded.	Decrease the motor load. If no motor overload exists, check the temperature model parameters.
17	Motor underload	Motor underload protection has tripped.	Check load.
18	Unbalance (Warning only)	Unbalance between power modules in paralleled units. Subcode in T.14: S1 = Current unbalance S2 = DC-Voltage unbalance	Should the fault re-occur, contact your local distributor.
22	EEPROM checksum fault	Subcodes: S1 = Firmware interface power down variable checksum error. S2 = Firmware interface variable check sum error. S3 = System power down variable check sum error S4 = System parameter checksum error S5 = Application-defined powerdown, variable checksum error. S6 = Application-defined powerdown, variable checksum. S10 = System parameter checksum error (fault history entries, device valid, system menu parameters).	Should the fault re-occur, contact your local distributor.
24	Counter fault	Values displayed on counters are incorrect.	Take a critical attitude towards values shown on counters.

Table 60. Fault codes

Fault code	Fault	Possible cause	Correcting measures
25	Microprocessor watchdog fault	- faulty operation - component failure Subcodes: S1 = CPU watchdog timer S2 = ASIC reset	Reset the fault and restart. Should the fault re-occur, contact your distributor.
26	Startup prevented	Start-up of the drive has been prevented. Subcodes: S1 = Prevention of accidental start-up. S2 = Appears if START command is ON, when returning to READY STATE after Safe Disable has been active. S30 = Appears if START command is ON after system software has been downloaded, after application has been downloaded or application has been changed.	Cancel prevention of start-up if this can be done safely.
29	Thermistor fault	The thermistor input of option board has detected increase of the motor temperature. Subcodes: S1 =Thermistor input activated on OPT-AF board S2 = Special application	Check motor cooling and loading. Check thermistor connection (If thermistor input of the option board is not in use it has to be short circuited).
30	Safe Disable warning	Safe disable inputs SD1 and SD2 are activated through the option board OPT-AF.	Contact your distributor.
31	IGBT temperature (hardware)	IGBT Inverter Bridge overtemperature protection has detected too high a short-term overload current.	Check loading. Check motor size.
34	CAN bus communication	Sent message not acknowledged.	Ensure that there is another device on the bus with the same configuration.
35	Application	Problem in application software.	Contact your distributor. If you are application programmer check the application program.
36	Control unit	VACON® NXS Control Unit can not control VACON® NXP Power Unit and vice versa.	Change control unit.
37	Device changed (same type)	Option board or power unit changed. New device of same type and rating. Subcodes: S1 = Control board S2 = Control unit S3 = Power board S4 = Power unit S5 = Adapter board and slot	Reset. Device is ready for use. Old parameter settings will be used.

Table 60. Fault codes

Fault code	Fault	Possible cause	Correcting measures
38	Device added (same type)	Option board added. Subcodes: S1 = Control board S4 = Control unit S5 = Adapter board and slot	Reset. Device is ready for use. Old board settings will be used.
39	Device removed	Option board removed.	Reset. Device no longer available.
40	Device unknown Unknown option board or drive.	Subcode in T.14: S1 = Unknown device S2 = Power1 not same type as Power2 S3 = NXS or NXP1 and star coupler S4 = Software and ctrl unit incompatible S5 = Old control board version	Contact your local distributor.
41	IGBT temperature	IGBT Inverter Bridge overtemperature protection has detected too high a short term overload current	Check loading. Check motor size.
42	Brake resistor overtemperature	Subcodes: S1 = Internal brake chopper overtemp. S2 = Brake resistance too high (BCU) S3 = Brake resistance too low (BCU) S4 = Brake resistance not detected (BCU) S5 = Brake resistance leakage (earth fault) (BCU)	Reset unit. Set the deceleration time longer and restart. Dimensioning of the brake chopper is not correct. Use external brake resistor.
43	Encoder fault	Problem detected in encoder signals. Sub code in T.14: S1 = Encoder 1 channel A is missing S2 = Encoder 1 channel B is missing S3 = Both enc. 1 channels are missing S4 = Encoder reversed S5 = Encoder board missing S6 = Serial communication fault S7 = Channel A/Channel B mismatch S8 = Resolver/Motor pole pair mismatch S9 = Missed start angle	Check encoder channel connections. Check the encoder board.
44	Device changed (different type)	Option board or power unit changed. New device of different type or different rating than the previous one. Subcodes: S1 = Control board S2 = Control unit S3 = Power board S4 = Power unit S5 = Adapter board and slot	Reset Set the option board parameters again if option bard changed. Set AC drive parameters again if power unit changed.

Local contacts: http://drives.danfoss.com/danfoss-drives/local-contacts/

Table 60. Fault codes

Fault code	Fault	Possible cause	Correcting measures
45	Device added (different type)	Option board of different type added. Subcodes: S1 = Control board S2 = Control unit S3 = Power board S4 = Power unit S5 = Adapter board and slot	Reset Set the option board parameters again.
49	Div by zero in application	A division by zero has occurred in the application program.	Contact your distributor. If you are application programmer check the application program.
50	Analogue input Iin < 4mA (sel. signal range 4 to 20 mA)	Current at the analogue input is < 4mA. - control cable is broken or loose - signal source has failed	Check the current loop circuitry.
51	External fault	Digital input fault.	
52	Keypad communication fault	Keypad communication fault The connection between the control keypad and the AC drive is broken.	Check keypad connection and possible keypad cable.
53	Fieldbus fault	The data connection between the fieldbus Master and the fieldbus board is broken.	Check installation. If installation is correct contact the nearest distributor.
54	Slot fault	Defective option board or slot.	Check board and slot. Contact the nearest distributor.
55	Actual value supervision		
56	PT100 board temp. fault	Temperature limit values set for the PT100 board parameters have been exceeded.	Find the cause of temperature rise.
57	Identification	Identification run has failed.	Run command was removed before completion of identification run. Motor is not connected to AC drive. There is load on motor shaft.
58	Brake	Actual status of the brake is different from the control signal.	Check mechanical brake state and connections.
59	Follower communication	SystemBus or CAN communication is broken between Master and Follower.	Check option board parameters. Check optical fibre cable or CAN cable.
60	Cooling	Coolant circulation on liquid-cooled drive has failed.	Check reason for the failure on external system.

Table 60. Fault codes

Fault code	Fault	Possible cause	Correcting measures
61	Speed error	Motor speed is unequal to reference.	Check encoder connection. PMS motor has exceeded the pull out torque.
62	Run disable	Run enable signal is low.	Check reason for Run enable signal.
63	Emergency stop	Command for emergency stop received from digital input or fieldbus.	New run command is accepted after reset.
64	Input switch open	Drive input switch is open.	Check the main power switch of the drive.

9.2 LOAD TEST WITH MOTOR

1. Connect the motor cables and check the right phase order. Also check that the motor rotates freely.
2. Check liquid cooling system operation.
3. Turn on the supply voltage and ensure that all input phases are connected to the unit.
4. Check DC link voltage by measuring with multimeter and compare the value to the one on monitoring page V1.8.
5. Select the application of your choice and set the needed parameters (see Start-up Quick Guide, step 8 on page 4.
6. Start the operation with lower Current Limit value and long Acceleration/Deceleration times.
7. If Closed Loop control mode is used, check direction of encoder and make necessary Closed Loop parameter settings. Check the correct operation of the encoder by running the system in open loop and check the signals in the expander board menu.
8. Run the motor without load between minimum and maximum frequencies and check the unit output current with a current clamp. Compare the value to the one on monitoring page V1.4.
9. Load the motor to nominal value if possible and repeat the current measurement. Follow the Unit Temperature value on page V1.9.

Local contacts: http://drives.danfoss.com/danfoss-drives/local-contacts/

9.3 DC LINK TEST (WITHOUT MOTOR)

NOTE! There will be dangerous voltages present during this test!

1. Read carefully the safety instructions in Chapter 1 and follow them.
2. Connect a variable DC power supply to DC+ and DC– terminals. Make sure that all polarities are correct.
3. Slowly charge up the DC link to nominal voltage. Allow the system to remain at this level for at least one minute and check current.
4. If possible, continue increasing the DC link voltage up to the trip limit. Fault F2 (see Chapter 9) should occur at 911 VDC (NX_5, 400...500-volt units), at 1200 VDC (NX_6, 525...690-volt units) and 1300 VDC (NX_8, 525...690-volt units). Do not increase the voltage over the trip limit.
5. Bring the power supply voltage back to zero. Allow sufficient time for the capacitors to discharge.
6. Check the DC bus voltage with a multimeter. When you read zero volts disconnect the power supply and reconnect all wires to the phase module.
7. If the phase module has been de-energized for an extended period of time (six months or longer) allow this voltage to remain for a minimum of 30 minutes – even 4 hours if time permits.

Through the above test procedure, two things are achieved: 1) It allows the caps to partially reform due to storage and shipping; 2) It allows any device failures to evidence themselves with a low power failure.

10. ACTIVE FRONT END (NXA)

10.1 INTRODUCTION

The VACON® NX Active Front End is used to transfer power between the AC input and intermediate DC circuit. The VACON® NX Active Front End has a two-way function. This means that when power is transferred from the AC input to the intermediate DC circuit, the VACON® NX Active Front End rectifies the alternating current and voltage. When power is transferred from the intermediate DC circuit to the AC input, the VACON® NX Active Front End inverts the direct current and voltage.

The Active Front End configurations consist of the unit itself, LCL filter, pre-charging circuit, control unit, AC fuses, main contactor / circuit breaker and DC fuses which you need to take into account when planning the switchgear configuration, see Figure 85.

10.2 DIAGRAMS

10.2.1 ACTIVE FRONT END UNIT BLOCK DIAGRAM

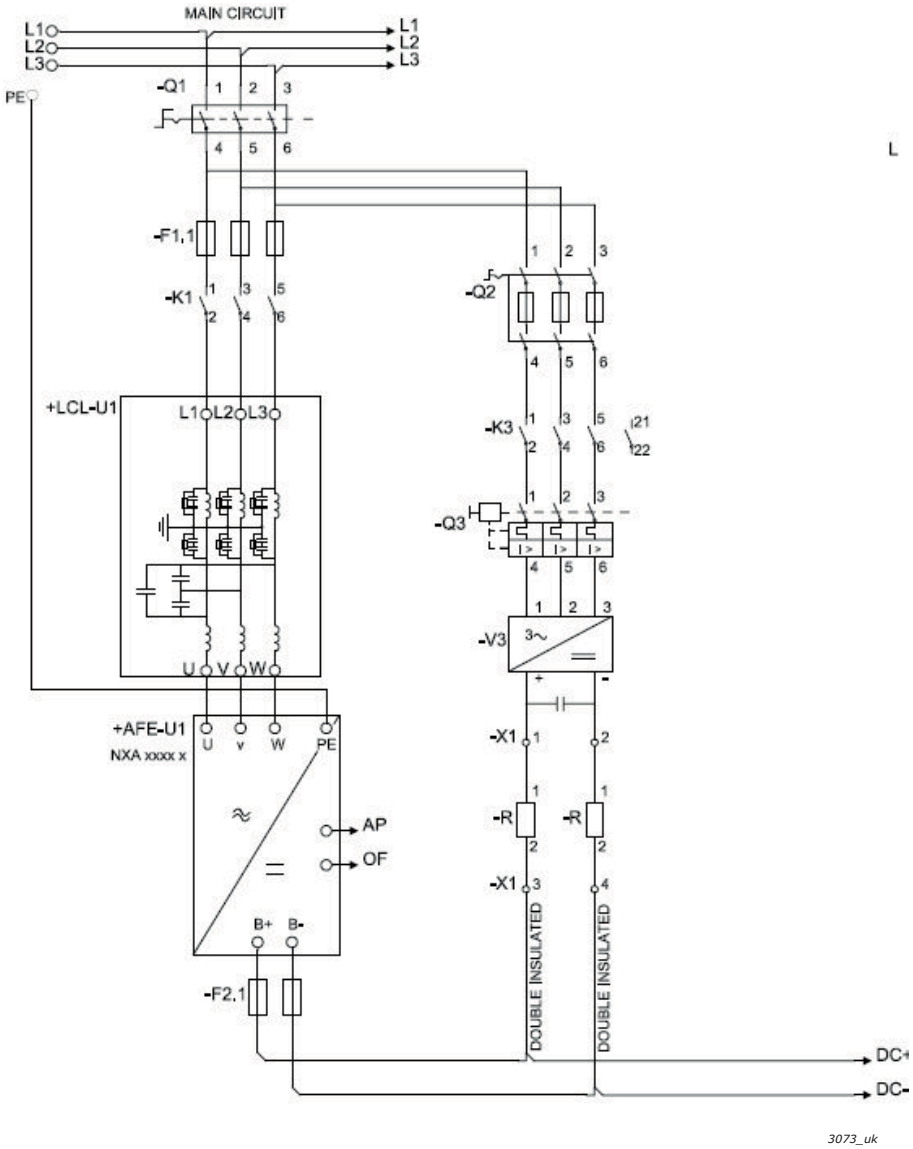

Figure 85. Active front end configuration

10.3 TYPE DESIGNATION CODE

In Vacon type designation code, the Active Front Unit is characterized by the characters **NXA** and number **2**, for example:

NXA	0300	5	A	0	T	0	**2**WF	A1A2000000

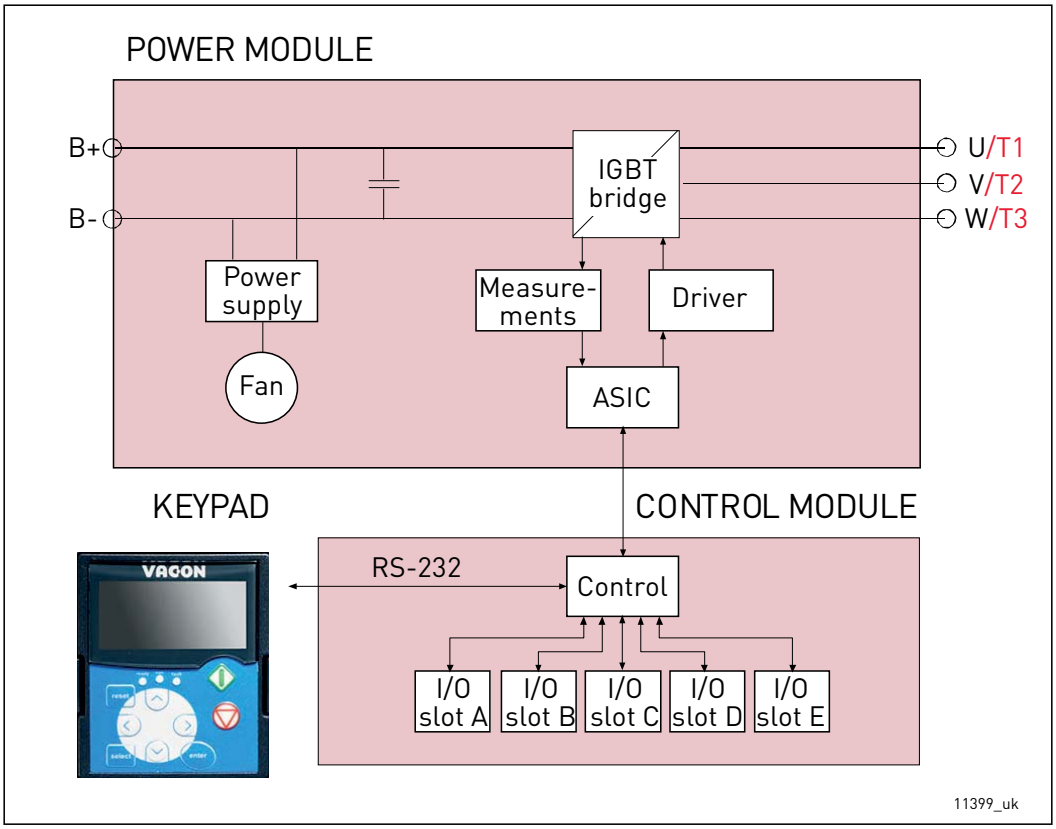

Figure 86. Active front end block diagram

10.4 ACTIVE FRONT END UNIT TECHNICAL DATA

The technical data for the active front end unit, see table below.

*) NX_8 AC drives only available as Ch6x AFE/BCU/INU units.

Table 61. Technical data

Mains connection	Input voltage U_{in}	NX_5: 400...500 VAC (–10%...+10%); 465...800 VDC (–0%...+0%) NX_6: 525...690 VAC (–10%...+10%); 640...1100 VDC (–0%...+0%) NX_8: 525...690 VAC (–10%...+10%); 640...1200 VDC (–0%...+0%)*)	
	Input frequency	45...66 Hz	
	Connection to mains	Once per minute or less	
	DC bank capacitance	Voltage class 500 V:	Ch3 (16-31A units): 410 µF Ch3 (38-61A units): 600 µF CH4: 2400 µF CH5: 7200 µF CH61: 10800 µF CH62/CH72: 10800 µF CH63: 21600 µF CH64/CH74: 32400 µF 2*CH64/2*CH74: 64800 µF
		Voltage class 690 V:	CH61: 4800 µF CH62/CH72: 4800 µF CH63: 9600 µF CH64/CH74: 14400 µF 2*CH64/2*CH74: 28800 µF
Supply network	Networks	TN, TT, IT	
	Short circuit current	Maximum short circuit current has to be < 100 kA.	
	Rated apparent power	The rated apparent power of the supply network including generators and/or transformers should be greater than 50% of the total rated apparent power of the Active Front End units which are connected to the network.	
DC output connection	Voltage	1.35 x U_{in} x 1.1 (default DC link voltage boosting is 110%)	
	Continuous output current	Rated current at nominal inflow cooling water temperature according to dimensioning charts.	
Control characteristics	Control method	Open Loop Vector Control	
	Switching frequency	NXA: Factory setting 3.6 kHz	

Table 61. Technical data

Ambient conditions	Ambient operating temperature	–10 °C (no frost)...+50 °C (at I_{th}) The VACON® NX Liquid-Cooled drives must be used in an heated indoor controlled environment.
	Installation temperature	0...+70 °C
	Storage temperature	–40 °C...+70 °C; No liquid in heatsink under 0 °C
	Relative humidity	5 to 96% RH, non-condensing, no dripping water
	Air quality: • chemical vapours • mechanical particles	IEC 60721-3-3, unit in operation, class 3C2 IEC 60721-3-3, unit in operation, class 3S2 (no conductive dust allowed) No corrosive gases
	Altitude	NX_5: (380...500 V): max. 3000 m (in case network is not corner grounded) NX_6/NX_8: max. 2000 m. For further requirements, contact factory 100-% load capacity (no derating) up to 1,000 m; above 1,000 m derating of maximum ambient operating temperature by 0.5 °C per each 100 m is required.
	Vibration EN 50178/EN 60068-2-6	5...150 Hz Displacement amplitude 0.25 mm (peak) at 3...31 Hz Max acceleration amplitude 1 G at 31...150 Hz
	Shock EN 50178, EN 60068-2-27	UPS Drop Test (for applicable UPS weights) Storage and shipping: max 15 G, 11 ms (in package)
	Enclosure class	IP00/Open Frame standard in entire kW/HP range
	Pollution degree	PD2
EMC	Immunity	Fulfils IEC/EN 61800-3 EMC immunity requirements.
	Emissions	EMC level N for TN/TT networks EMC level T for IT networks
Safety		IEC/EN 61800-5-1 (2007), CE, UL, cUL, GOST R, (see unit nameplate for more detailed approvals) IEC 60664-1 and UL840 in overvoltage category III.
	Safe Torque Off (STO) board	The drive is equipped with VACON® OPTAF board for prevention of torque on motor shaft . Standards: prEN ISO 13849-1 (2004), EN ISO 13849-2 (2003), EN 60079-14 (1997), EN 954-1 (1996), cat. 3 (hardware disable); IEC 61508-3(2001), prEN 50495 (2006). See VACON® NX OPTAF STO Board User Manual for detailed information.

Table 61. Technical data

Control connections (apply to boards OPT-A1, OPT-A2 and OPT-A3)	Analogue input voltage	0...+10 V, R_i = 200 kΩ, (–10 V...+10 V joystick control) Resolution 0.1%, accuracy ±1%
	Analogue input current	0(4)...20 mA, Ri = 250 W differential
	Digital inputs (6)	Positive or negative logic; 18...24 VDC
	Auxiliary voltage	+24 V, ±10%, max volt. ripple < 100 mVrms; max. 250 mA Dimensioning: max. 1000 mA/control box 1A external fuse required (no internal short-circuit protection on the control board)
	Output reference voltage	+10 V, +3%, max. load 10 mA
	Analogue output	0(4)...20 mA; R_L max. 500 Ω; Resolution 10 bit; Accuracy ±2%
	Digital outputs	Open collector output, 50 mA/48 V
	Relay outputs	2 programmable change-over relay outputs Switching capacity: 24 VDC/8 A, 250 VAC/8 A, 125 VDC/0.4 A Min. switching load: 5 V/10 mA
Protections	Overvoltage trip limit	NX_5: 911 VDC NX_6: (CH61, CH62, CH63 & CH64): 1258 VDC NX_8: 1300 VDC
	Undervoltage trip limit	NX_5: 333 VDC; NX_6: 461 VDC; NX_8: 461 V (all VDC)
	Earth fault protection	In case of earth fault in motor or motor cable, only the AC drive is protected.
	Mains supervision	Trips if any of the input phases is missing (AC drives only).
	Input phase monitoring	Trips if any of the output phases is missing.
	Unit overtemperature protection	Alarm limit: 65 °C (heatsink); 75 °C (circuit boards). Trip limit: 70 °C (heatsink); 85 °C (circuit boards).
	Overcurrent protection	Yes
	Unit overheat protection	Yes
	Short-circuit protection of +24 V and +10 V reference voltages	Yes

Table 61. Technical data

Liquid cooling	Allowed cooling agents	Drinking water (see specification on page 49) Water-glycol mixture See derating specifications, Chapter 5.3.
	Volume	See Table 19.
	Temperature of cooling agent	0...35 °C input (I_{th}); 35...55 °C: derating required, see Chapter 5.3. Max. temperature rise during circulation max. 5 °C No condensation allowed. See Chapter 5.2.1.
	Cooling agent flow rates	See Table 15.
	System max. working pressure	6 bar
	System max. peak pressure	30 bar
	Pressure loss (at nom. flow)	Varies according to size. See Table 17.

10.5 POWER RATINGS

Table 62. Power ratings of VACON® NX Liquid-Cooled AFE unit, supply voltage 400-500 VAC

VACON NX Liquid-Cooled Front End; DC Bus voltage 465–800 VDC									
Active front-end type	AC Current			DC power				Power loss c/a/T*) [kW]	Chassis
	Thermal I_{th} [A]	Rated I_L [A]	Rated I_H [A]	400 VAC mains I_{th} [kW]	500 VAC mains I_{th} [kW]	400 VAC mains I_L [kW]	500 VAC mains I_L [kW]		
0168_5	168	153	112	113	142	103	129	2.5/0.3/2.8	CH5
0205_5	205	186	137	138	173	125	157	3.0/0.4/3.4	CH5
0261_5	261	237	174	176	220	160	200	4.0/0.4/4.4	CH5
0300_5	300	273	200	202	253	184	230	4.5/0.4/4.9	CH61
0385_5	385	350	257	259	324	236	295	5.5/0.5/6.0	CH61
0460_5	460	418	307	310	388	282	352	5.5/0.5/6.0	CH62
0520_5	520	473	347	350	438	319	398	6.5/0.5/7.0	CH62
0590_5	590	536	393	398	497	361	452	7.5/0.6/8.1	CH62
0650_5	650	591	433	438	548	398	498	8.5/0.6/9.1	CH62
0730_5	730	664	487	492	615	448	559	10.0/0.7/10.7	CH62
0820_5	820	745	547	553	691	502	628	10.0/0.7/10.7	CH63
0920_5	920	836	613	620	775	563	704	12.4/0.8/12.4	CH63
1030_5	1030	936	687	694	868	631	789	13.5/0.9/14.4	CH63
1150_5	1150	1045	767	775	969	704	880	16.0/1.0/17.0	CH63
1370_5	1370	1245	913	923	1154	839	1049	15.5/1.0/16.5	CH64
1640_5	1640	1491	1093	1105	1382	1005	1256	19.5/1.2/20.7	CH64
2060_5	2060	1873	1373	1388	1736	1262	1578	26.5/1.5/28.0	CH64
2300_5	2300	2091	1533	1550	1938	1409	1762	29.6/1.7/31.3	CH64

*) C = power loss into coolant, A = power loss into air, T = total power loss.

The enclosure class for all VACON® NX Liquid-Cooled AC drives is IP00.

I_{th} = Thermal maximum continuous RMS current. Dimensioning can be done according to this current if the process does not require any overloadability or the process does not include any load variation.

I_L = Low overloadability current. Allows +10% load variation. 10% exceeding can be continuous.

I_H = High overloadability current. Allows +50% load variation. 50% exceeding can be continuous.

All values with cosφ = 0.99 and efficiency = 97.5%.

*) c = power loss into coolant; a = power loss into air; T = total power loss.

All power losses obtained using max. supply voltage, I_{th} and switching frequency of 3.6 kHz. All power losses are worst case losses.

Local contacts: http://drives.danfoss.com/danfoss-drives/local-contacts/

Table 63. Power ratings of VACON® NX Liquid-Cooled AFE unit, supply voltage 525-690 VAC

VACON NX Liquid-Cooled Front End; DC Bus voltage 640–1100 VDC ***)									
Active front-end type	AC Current			DC power				Power loss c/a/T*) [kW]	Chassis
	Thermal I_{th} [A]	Rated I_L [A]	Rated I_H [A]	525 VAC mains I_{th} [kW]	690 VAC mains I_{th} [kW]	525 VAC mains I_L [kW]	690 VAC mains I_L [kW]		
0170_6	170	155	113	150	198	137	180	3.6/0.2/3.8	CH61
0208_6	208	189	139	184	242	167	220	4.3/0.3/4.6	CH61
0261_6	261	237	174	231	303	210	276	5.4/0.3/5.7	CH61
0325_6	325	295	217	287	378	261	343	6.5/0.3/6.8	CH61
0385_6	385	350	257	341	448	310	407	7.5/0.4/7.9	CH62
0416_6	416	378	277	368	484	334	439	8.0/0.4/8.4	CH62
0460_6	460	418	307	407	535	370	486	8.7/0.4/9.1	CH62
0502_6	502	456	335	444	584	403	530	9.8/0.5/10.3	CH62
0590_6	590	536	393	522	686	474	623	10.9/0.6/11.5	CH63
0650_6	650	591	433	575	756	523	687	12.4/0.7/13.1	CH63
0750_6	750	682	500	663	872	603	793	14.4/0.8/15.2	CH63
0820_6	820	745	547	725	953	659	866	15.4/0.8/16.2	CH64
0920_6	920	836	613	814	1070	740	972	17.2/0.9/18.1	CH64
1030_6	1030	936	687	911	1197	828	1088	19.0/1.0/20.0	CH64
1180_6	1180	1073	787	1044	1372	949	1247	21.0/1.1/22.1	CH64
1300_6	1300	1182	867	1150	1511	1046	1374	24.0/1.3/25.3	CH64
1500_6	1500	1364	1000	1327	1744	1207	1586	28.0/1.5/29.5	CH64
1700_6	1700	1545	1133	1504	1976	1367	1796	32.1/1.7/33.8	CH64

*) C = power loss into coolant, A = power loss into air, T = total power loss.

The enclosure class for all VACON® NX Liquid-Cooled AC drives is IP00.

***) Mains voltage 640-1200 VDC for NX_8 inverter units.

I_{th} = Thermal maximum continuous RMS current. Dimensioning can be done according to this current if the process does not require any overloadability or the process does not include any load variation.

I_L = Low overloadability current. Allows +10% load variation. 10% exceeding can be continuous.

I_H = High overloadability current. Allows +50% load variation. 50% exceeding can be continuous.

All values with cosφ = 0.99 and efficiency = 97.5%.

*) c = power loss into coolant; a = power loss into air; T = total power loss.

All power losses obtained using max. supply voltage, I_{th} and switching frequency of 3.6 kHz. All power losses are worst case losses.

10.6 LIQUID-COOLED RLC FILTERS

10.6.1 INTRODUCTION

VACON® Liquid-Cooled AFE units can be used with either Liquid Cooled or Air Cooled LCL filters. The standard Liquid Cooled LCL filters are named RLC filter. The RLC filter type codes can be seen from Table 62. The RLC filters are not included in the standard delivery of the AFE units and therefor they need to be ordered reparately. More information about Air Cooled LCL filters can be found from UD01190B, VACON® NX Active Front End User's Manual, FI9-13.

10.6.2 WIRING DIAGRAMS

The RLC filter contains a 3-phase chokes (L_{net})on the mains side, capacitors bank (C_{bank}) and 3 pcs of 1-phase choke (L_{drive}) on the AFE side, Figure 87. The RLC also includes capacitors connected against ground potential. There are resistors connected across the capacitors for discharging them when the LCL filter is disconnected from the input power. The discharging resistors are 10 MΩ, 500 V and 0.5 W.

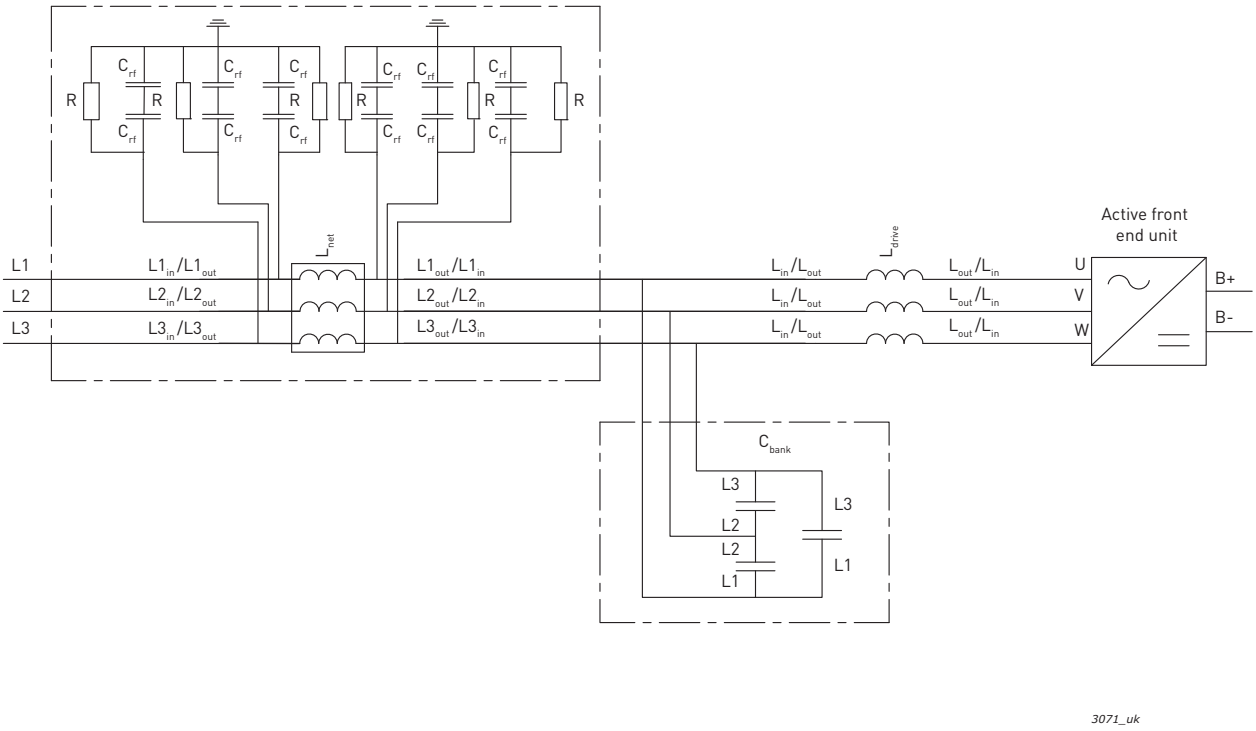

Figure 87. VACON® RLC filter wiring diagram

10.6.3 POWER RATING AND DIMENSIONS

Table 64. VACON® RLC ratings, drive suitable and dimensions

VACON NX Liquid-Cooled regenerative line filters - IP00							
LCL filter type	**Thermal current I_{th} [A]**	**Power loss c/a/T*) [kW]**	**Suitability [Drive/ voltage:(current)]**	**Dimensions L_{net}, 1pcs WxHxD [mm]**	**Dimensions Ldrive, 1pcs (total 3pcs), WxHxD [mm]**	**Dimensions C_{bank}, 1pcs WxHxD [mm]**	**Total Weight [kg]**
RLC-0385-6-0	385	2.6/0.8/3.4	CH62/690 VAC: 325 A & 385 A	580 x 450 x 385	410 x 415 x 385	360 x 265 x 150	458
RLC-0520-6-0	520	2.65/0.65/3.3	CH62/500-690 VAC	580 x 450 x 385	410 x 415 x 385	360 x 265 x 150	481
RLC-0750-6-0	750	3.7/1/4.7	CH62/500 VAC, CH63/690 VAC	580 x 450 x 385	410 x 450 x 385	360 x 275 x 335	508
RLC-0920-6-0	920	4.5/1.4/5.9	CH63/500 VAC, CH64/690 VAC	580 x 500 x 390	410 x 500 x 400	360 x 275 x 335	577
RLC-1180-6-0	1180	6.35/1.95/8.3	CH63/500 VAC, CH64/690 VAC	585 x 545 x 385	410 x 545 x 385	350 x 290 x 460	625
RLC-1640-6-0	1640	8.2/2.8/11	CH64/500-690 VAC	585 x 645 x 385	420 x 645 x 385	350 x 290 x 460	736
RLC-2300-5-0	2300	9.5/2.9/12.4	CH64/500 VAC: 2060 A & 2300 A	585 x 820 x 370	410 x 820 x 380	580 x 290 x 405	896

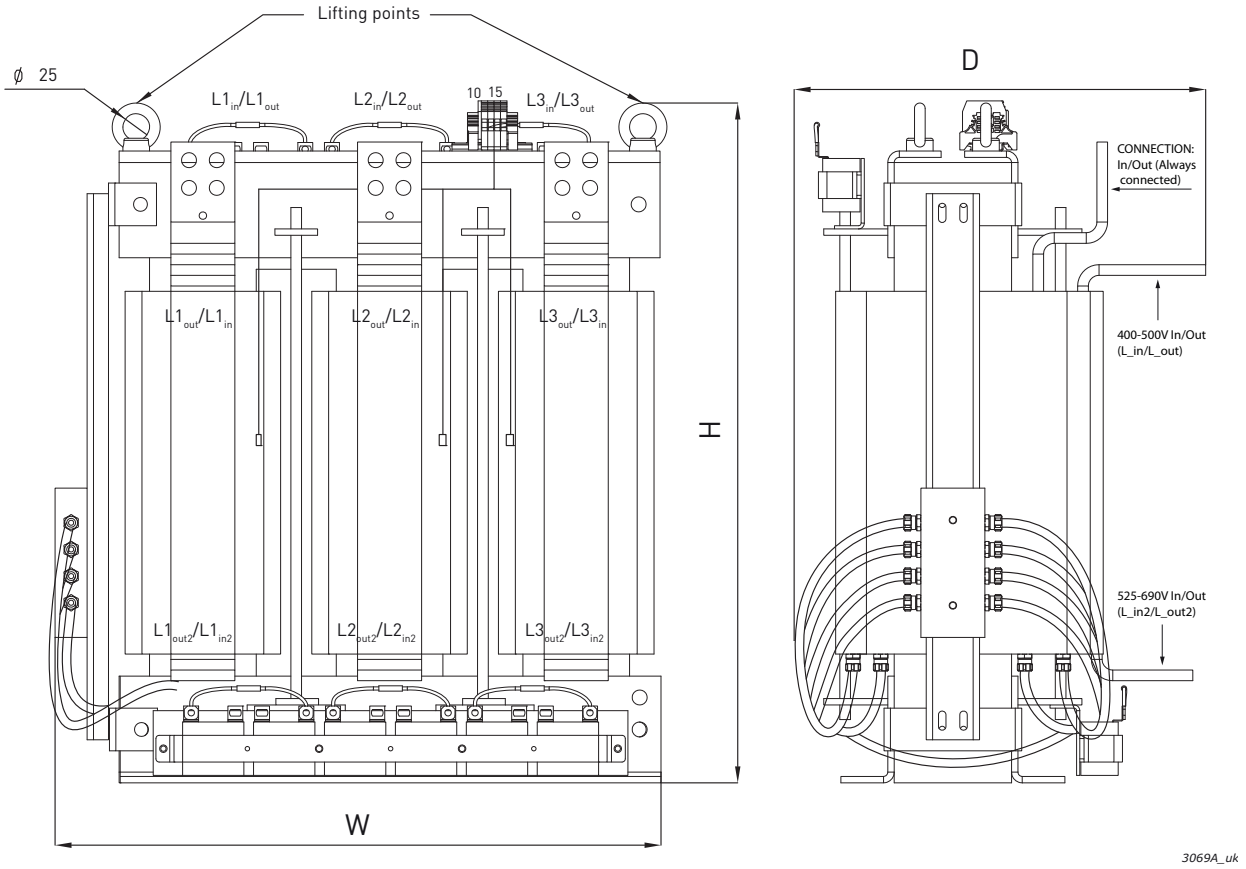

Figure 88. Example of L_{net} choke of a VACON® RLC filter

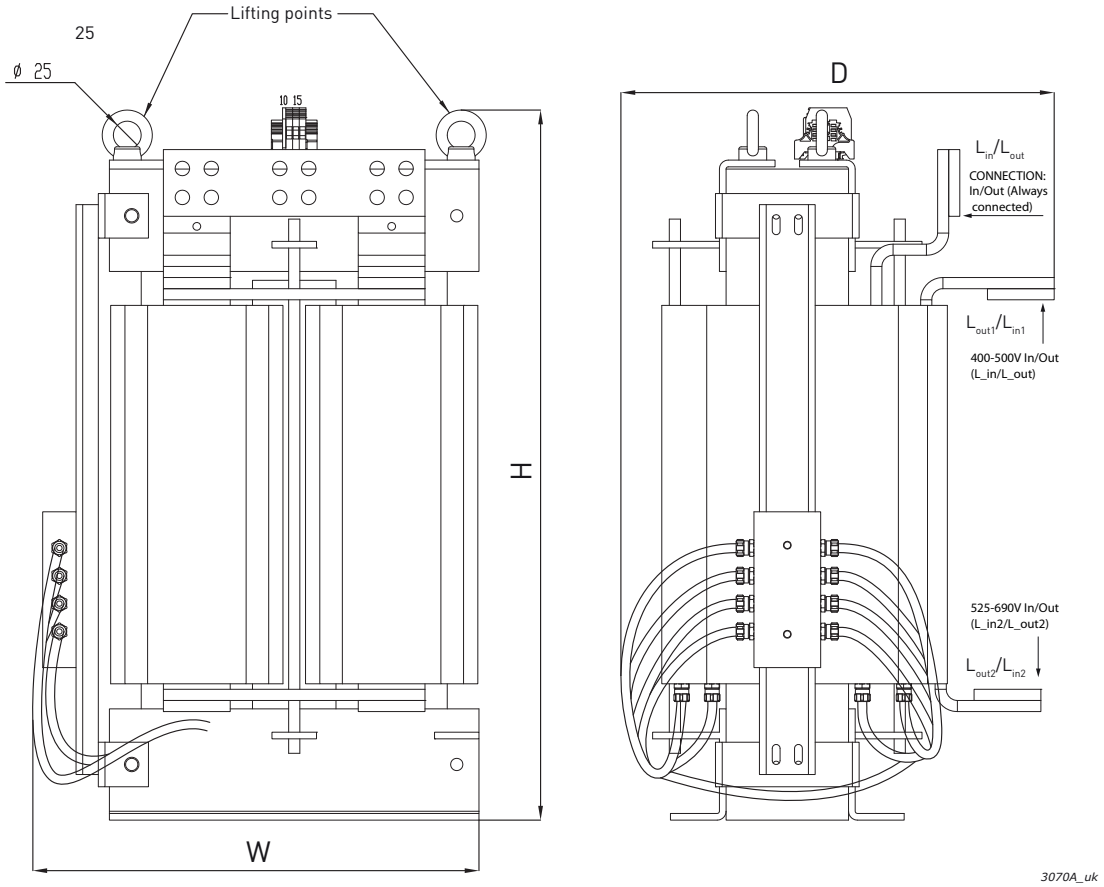

Figure 89. Example of L_{afe} choke of a VACON® RLC filter

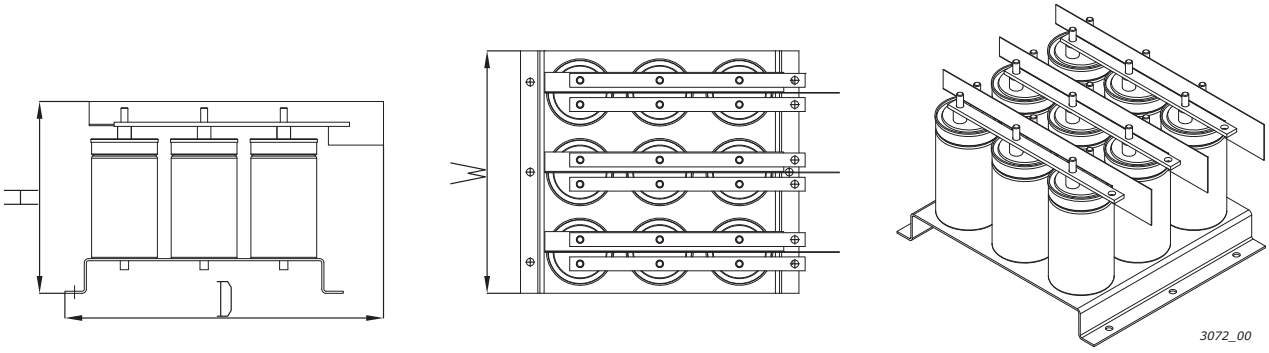

Figure 90. Example of capacitor bank (C_{bank}) of a VACON® RLC filter

10.6.4 TECHNICAL DATA

Table 65. VACON® RLC technical data

AC connections	Voltage U_{in}	Same as the NXA unit.
	Frequency f_{in}	50 or 60 Hz + 2%.
	Continuous output current	See current rating of filter.
	Switching frequency	3.6 kHz
Ambient conditions	Ambient temperature during operation	-10...+50 °C
	Installation temperature	0...+70 °C
	Storage temperature	-40...+70 °C, no liquid in filter under 0 °C.
	Relative humidity	Same as the NXA unit.
	Enclosure class	IP00
Liquid cooling	Allowed cooling agents	Drinking water, demineralized water or a mixture of water and glycol. (To avoid electromechanical corrosion it is necessary to add an inhibitor.)
	Temperature of cooling agent	0...+60 °C
	Cooling agent flow rate	8l/min for one choke, total 32 l/min (for 1pcs L_{net} choke and 3pcs L_{drive} chokes).
	System max working pressure	6 bar
	Coolant connection	G3/8" female thread x 2 pcs. (1pcs inlet / 1pcs outlet)
Protection	Over-temperature monitoring	Thermal relay at each winding of the chokes. Thermal relays connected in series between terminals 10 and 15. Relay contact type: normally closed. Switching temperature: 150 °C.

10.6.5 REMOVING DISCHARGING RESISTORS

If the filter is used in a network fitted with an earth fault protection relay, the discharging resistors should be removed. If the discharging resistors are not removed, the earth fault monitoring device might indicate a very low leakage resistance. **The resistors must be connected so that the capacitors are discharged when disconnecting from the input power.** The wiring diagram of an alternative discharging circuit can be seen in Figure 91. The discharging resistors should be 10 kΩ, 500 V and 2 W. Failure to ensure the discharging of capacitors take a very long time to discharge.

Figure 92 and Figure 93 have a blue marking on the lead that has to be removed from each capacitors if the discharge resistor is not to be used.

WARNING! If you do not allow a total discharge of the system before starting the modification, it is likely that you will get an electricshock in spite of the fact the system is disconnected from the power supply.

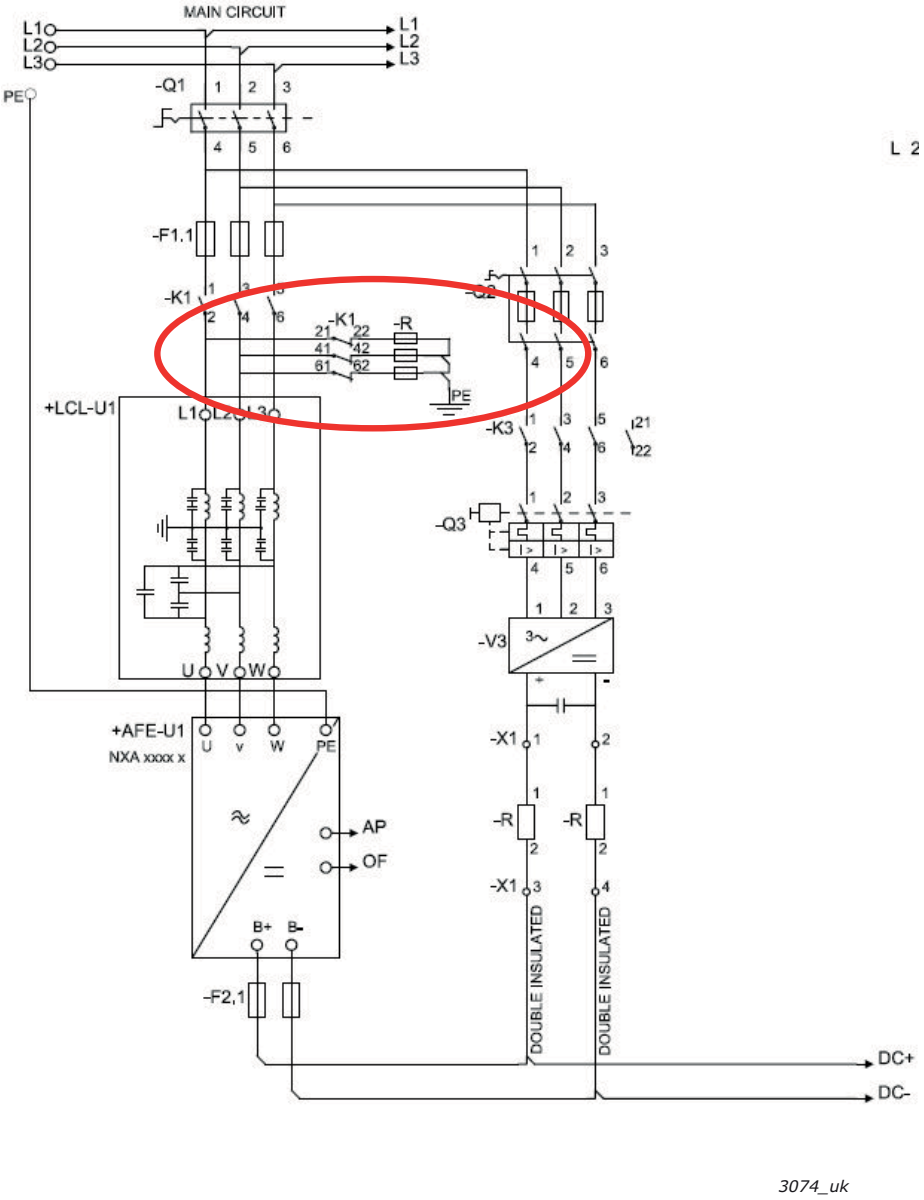

Figure 91. Wiring diagram of the alternative discharging circuit configuration

10.6.6 REMOVING HF CAPACITORS

If a PWM modulated rectifier from another manufacturer is connected to the same input transformer, the capacitors must be removed! Otherwise the capacitors must not be removed.

Figure 92 and Figure 93 have a red marking on the lead that has to be removed from each capacitor if the interference suppression capacitors are not to be used. Removing the lead disconnects the capacitors from ground potential.

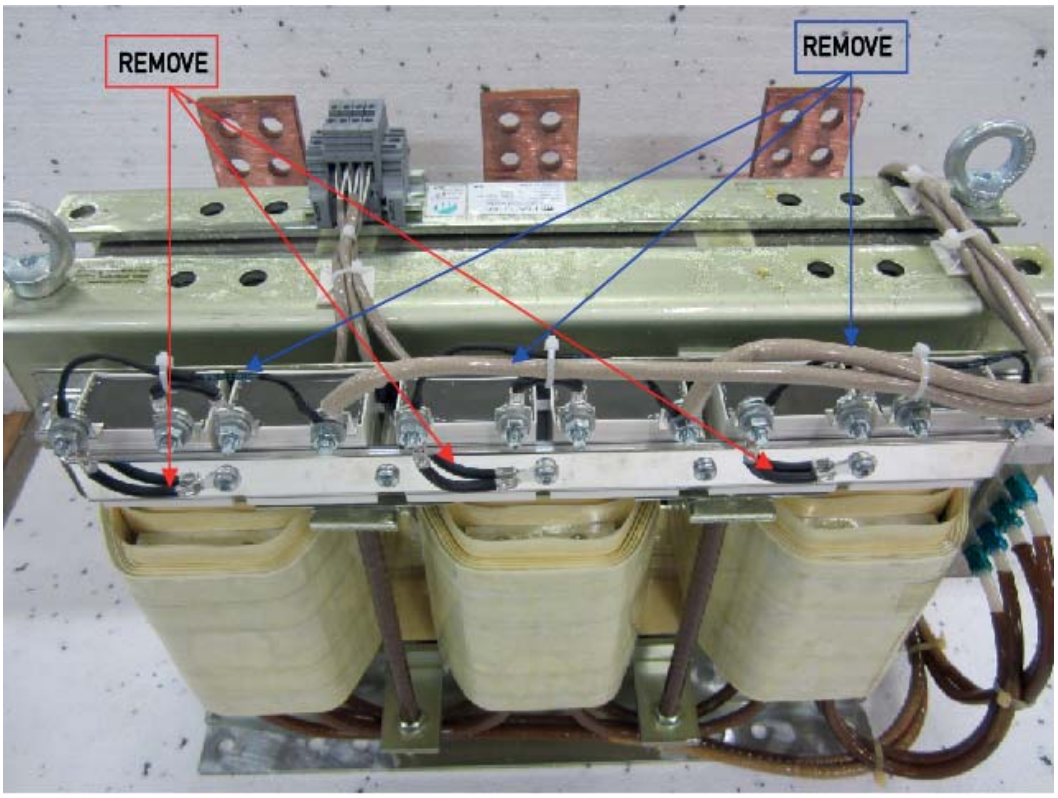

11400_uk

Figure 92. HF capacitors in RLC filters

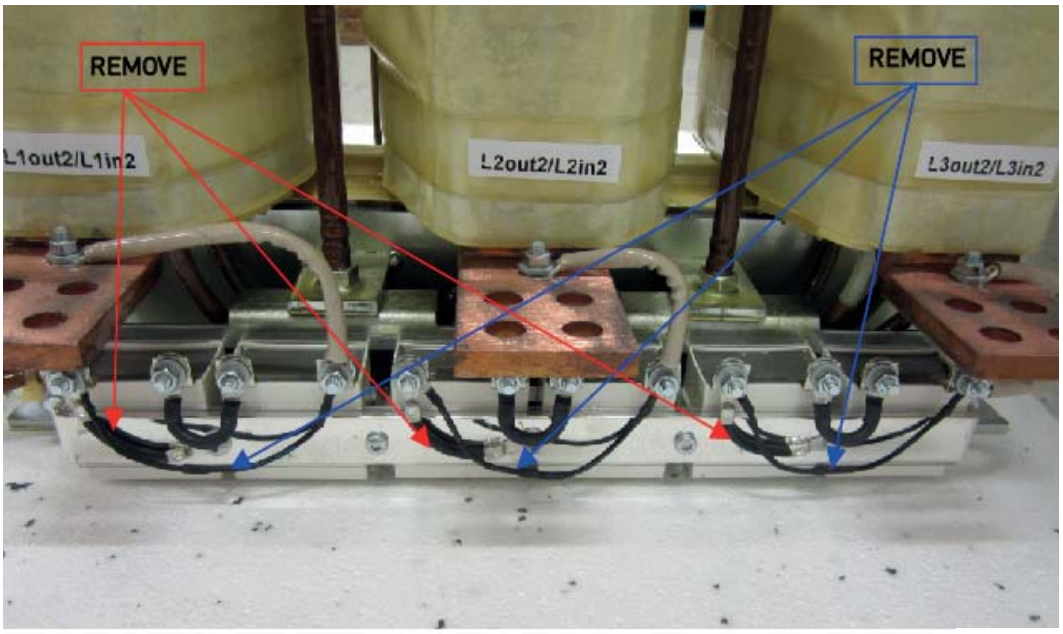

11401_uk

Figure 93. HF capacitors in RLC filters

10.7 ACTIVE FRONT END - FUSE SELECTION

AC fuses are used to protect the input network in case the Active Front End unit or the LCL filter is faulty. DC fuses are used to protect the Active Front End unit and the LCL filter in case there is a short circuit in the DC buses. If DC fuses are not used, short-circuit in the DC buses will cause a loading of the Active Front End unit. Vacon Ltd will not assume any responsibility for damages caused by insufficient protection. **The warranty becomes void if the drive is not equipped with appropriate fuses.**

Fuse information

The values in tables are based on max ambient temperature of +50 °C.

Fuse sizes can differ in the same chassis. Make sure that the Isc of the supply transformer is high enough to burn fuses fast enough.

Check the current rating of the fuse bases according to the input current of the drive.

The physical size of the fuse is chosen on the basis of the fuse current: Current < 250 amps (size 1 fuse), current > 250 amps (size 3 fuse).

The aR fuses are thermally rated into switch fuse in 50 degree ambient temperature.

The required AC fuse selection for the active front end unit can be found fromTable 66 and Table 67. The required DC fuse selection for the active front end unit can be found from Table 38 and Table 39.

10.7.1 FUSE SIZES, ACTIVE FRONT END UNITS (AC SUPPLY)

Table 66. Fuse sizes for VACON® NX AFE units (380—500V)

Chassis	Type	I_{th} [A]	Fuse size	DIN43620	'TTF' threaded end	'TTF' threaded end	Qty. of fuses / drive 3~
				aR fuse part nr.	aR fuse part nr.	aR fuse part nr.	
CH3	0016	16	DIN000	NH000UD69V40PV	PC30UD69V50TF	-	3
CH3	0022	22	DIN000	NH000UD69V40PV	PC30UD69V50TF	-	3
CH3	0031	31	DIN000	NH000UD69V63PV	PC30UD69V63TF	-	3
CH3	0038	38	DIN000	NH000UD69V100PV	PC30UD69V100TF	-	3
CH3	0045	45	DIN000	NH000UD69V100PV	PC30UD69V100TF	-	3
CH3	0061	61	DIN00	NH00UD69V125PV	PC30UD69V125TF	-	3
CH4	0072	72	DIN00	NH00UD69V200PV	PC30UD69V200TF	-	3
CH4	0087	87	DIN00	NH00UD69V200PV	PC30UD69V200TF	-	3
CH4	0105	105	DIN00	NH00UD69V200PV	PC30UD69V200TF	-	3
CH4	0140	140	DIN1	NH1UD69V315PV	PC30UD69V315TF	-	3
CH5	0168	168	DIN1	NH1UD69V315PV	PC30UD69V315TF	-	3
CH5	0205	205	DIN1	NH1UD69V400PV	PC30UD69V400TF	-	3
CH5	0261	261	DIN2	NH2UD69V500PV	PC31UD69V500TF	-	3
CH61	0300	300	DIN3	NH3UD69V630PV	PC32UD69V630TF	-	3
CH61	0385	385	DIN3	NH3UD69V630PV	PC32UD69V630TF	-	3
CH62	0460	460	DIN3	NH3UD69V1000PV	PC33UD69V1000TF	-	3
CH62	0520	520	DIN3	NH3UD69V1000PV	PC33UD69V1000TF	-	3
CH62	0590	590	DIN3	PC73UB69V1100PA	PC33UD69V1100TF	-	3

Table 66. Fuse sizes for VACON® NX AFE units (380—500V)

Chassis	Type	I_{th} [A]	Fuse size	DIN43620	'TTF' threaded end	'TTF' threaded end	Qty. of fuses / drive 3~
				aR fuse part nr.	aR fuse part nr.	aR fuse part nr.	
CH62	0650	650	DIN3	PC73UB69V1250PA	PC33UD69V1250TF	-	3
CH62	0730	730	DIN3	PC73UB69V1250PA	PC33UD69V1250TF	-	3
CH63	0820	820	DIN3	NH3UD69V800PV	PC32UD69V800TF	PC44UD75V16CTQ	6 (3)
CH63	0920	920	DIN3	NH3UD69V1000PV	PC33UD69V1000TF	PC44UD75V16CTQ	6 (3)
CH63	1030	1030	DIN3	NH3UD69V1000PV	PC33UD69V1000TF	PC44UD75V18CTQ	6 (3)
CH63	1150	1150	DIN3	PC73UB69V1100PA	PC33UD69V1100TF	PC44UD75V20CTQ	6 (3)
CH64	1370	1370	DIN3	NH3UD69V1000PV	PC33UD69V1000TF	PC44UD75V24CTQ	9 (3[1])
CH64	1640	1640	DIN3	NH3UD69V1000PV	PC33UD69V1000TF	PC44UD70V27CTQ	9 (3[1])
CH64	2060	2060	DIN3	PC73UB69V1250PA	PC33UD69V1250TF	PC44UD69V34CTQB	9 (3[1])
CH64	2300	2300	DIN3	PC73UB69V1250PA	PC33UD69V1250TF	PC47UD70V36CP50	9 (3[1])

Table 67. Fuse sizes for VACON® NX AFE units (525—690 V)

Chassis	Type	I_{th} [A]	DIN43620		TTF threaded end "7X" or size 83 with end contacts	TTF threaded end contacts in size 83 or size 84	Qty. of fuses / drive 3~
			Fuse size	aR fuse part nr.			
CH61	0170	170	DIN1	PC71UD13C315PA	PC71UD13C315TF	-	3
CH61	0208	208	DIN1	PC71UD13C400PA	PC71UD13C400TF	-	3
CH61	0261	261	DIN1	PC73UD13C500PA	PC73UD13C500TF	-	3
CH62	0325	325	DIN3	PC73UD13C630PA	PC73UD13C630TF	-	3
CH62	0385	385	DIN3	PC73UD13C630PA	PC73UD13C630TF	-	3
CH62	0416	416	DIN3	PC73UD11C800PA	PC73UD13C800TF	-	3
CH62	0460	460	DIN3	PC73UD11C800PA	PC73UD13C800TF	-	3
CH62	0502	502	DIN3	PC73UD10C900PA	PC73UD13C800TF	-	3
CH63	0590	590	DIN3	PC73UD90V11CPA	PC73UD95V11CTF	-	3
CH63	0650	650	DIN3	PC73UD90V11CPA	PC73UD95V11CTF	-	3
CH63	0750	750	DIN3	PC73UD13C630PA	PC73UD13C630TF	PC83UD11C13CTF	6(3)[1]
CH64	0820	820	DIN3	PC73UD11C800PA	PC73UD13C800TF	PC83UD11C14CTF	6(3)[1]
CH64	0920	920	DIN3	PC73UD11C800PA	PC73UD13C800TF	PC83UD95V16CTF	6(3)[1]
CH64	1030	1030	DIN3	PC73UD90V11CPA	PC73UD95V11CTF	PC84UD12C18CTQ	6(3)[1]
CH64	1180	1180	DIN3	PC73UD90V11CPA	PC73UD95V11CTF	PC84UD11C20CTQ	6(3)[1]
CH64	1300	1300	DIN3	PC73UD11C800PA	PC73UD13C800TF	PC84UD11C22CTQ	9(3)[1]
CH64	1500	1500	DIN3	PC73UD90V11CPA	PC73UD95V11CTF	PC84UD11C24CTQ	9(3)[1]
CH64	1700	1700	DIN3	PC73UD90V11CPA	PC73UD95V11CTF	PC84UD90V30CTQ	9(3)[1]

For DC fuse selection use table for liquid cooled inverters (page 75).

[1] Quantity of fuses needed of TTF types PC4********** and PC8**********.

10.8 PRE-CHARCING CIRCUIT

The Active Front End unit requires an external pre-charging circuit. The purpose of the pre-charging unit is to charge the voltage in the intermediate circuit to a level sufficient for connecting the Active Front End unit to the mains. The charging time depends on the capacitance of the intermediate circuit and the resistance of the charging resistors. The technical specifications of manufacturer's standard pre-charging circuits are shown in Table 68. Pre-charging circuits are suitable for 380-500 Vac and 525-690 Vac.

The pre-charging components can be ordered separately. Components of the pre-charging circuit are 2 pcs charging resistors, the contactor, the diode bridge and the snubber capacitor, see Table 69. Each pre-charging circuit has maximum charging capacity, see Table 68. If the capacitance of the intermediate circuit in the system exceeds the values shown, contact your nearest distributor.

Table 68. Capacitance Min and Max value for Pre-charging circuit

Pre-charging circuit ratings			
Pre charging type	**Resistance**	**Capacitance Min**	**Capacitance Max**
CHARGING-AFE-FFE-FI9	2 x 47 R	4950 µF	30000 µF
CHARGING-AFE-FFE-FI10	2 x 20 R	9900 µF	70000 µF
CHARGING-AFE-FFE-FI13	2 x 11 R	29700 µF	128000 µF

Table 69. Type designation code for the pre-charging components configuration

FI9 AFE / CHARGING-AFE-FFE-FI9				
Item	**Q'ty**	**Description**	**Manufacturer**	**Product Code**
1	1	Diode Bridge	Semikron	SKD 82
2	2	Charcing resistors	Danotherm	CAV150C47R
3	1	Snubber capacitor	Rifa	PHE448
4	1	Contactor	Telemecanique	LC1D32P7

FI10 AFE / CHARGING-AFE-FFE-FI10				
Item	**Q'ty**	**Description**	**Manufacturer**	**Product Code**
1	1	Diode Bridge	Semikron	SKD 82
2	2	Charcing resistors	Danotherm	CBV335C20R
3	1	Snubber capacitor	Rifa	PHE448
4	1	Contactor	Telemecanique	LC1D32P7

FI13 AFE / CHARGING-AFE-FFE-FI13				
Item	**Q'ty**	**Description**	**Manufacturer**	**Product Code**
1	1	Diode Bridge	Semikron	SKD 82
2	2	Charcing resistors	Danotherm	CBV335C11R

Local contacts: http://drives.danfoss.com/danfoss-drives/local-contacts/

FI13 AFE / CHARGING-AFE-FFE-FI13				
3	1	Snubber capacitor	Rifa	PHE448
4	1	Contactor	Telemecanique	LC1D32P7

The Active Front End unit must not be connected to mains without pre-charging. In order to ensure the correct operation of the pre-charging circuit, the input circuit-breaker or contactor, as well as the pre-charging circuit contactor, must be controlled by the Active Front End unit. The input circuit-breaker or contactor as well as the pre-charging circuit contactor must be connected as shown in Figure 94.

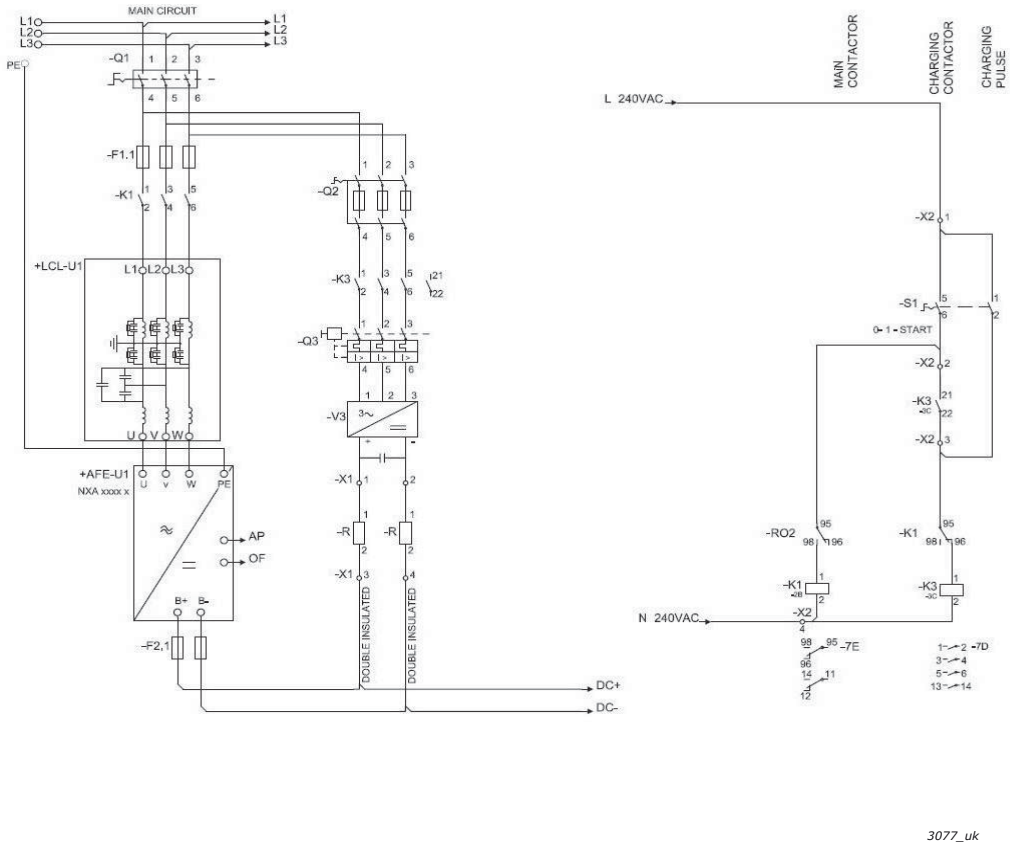

Figure 94. Wiring diagram for AFE unit

The example shown in Figure 94 uses a spring-return switch. The switch has positions 0-1-START. The spring returns the switch from position START to position 1. To start the pre-charging, the switch is turned from position 0 via 1 to START. When pre-charging starts, the switch can be released and it returns to position 1. No other control measures are required. The Active Front End application controls the main contactor of the system with Relay Output RO2, see Figure 95. When pre-charging of the intermediate circuit is ready the main contactor will be closed. The status of the main contactor is monitored via digital input (Default is DIN4). As a default the main contactor monitoring is ON but it can be set OFF with parameter. The main contactor should not be possible close without pre-charging.

To open the main contactor, simply turn the switch to 0. The contactor should not be opened under load. Opening the contactor under load will shorten its service life.

NOTE! Wirings what are used for connecting the pre-charging circuit to the intermediate circuit has to be double insulated.

NOTE! Enough space must be reserved around the resistors to ensure sufficient cooling. Don't place any heat sensitive components near the resistors.

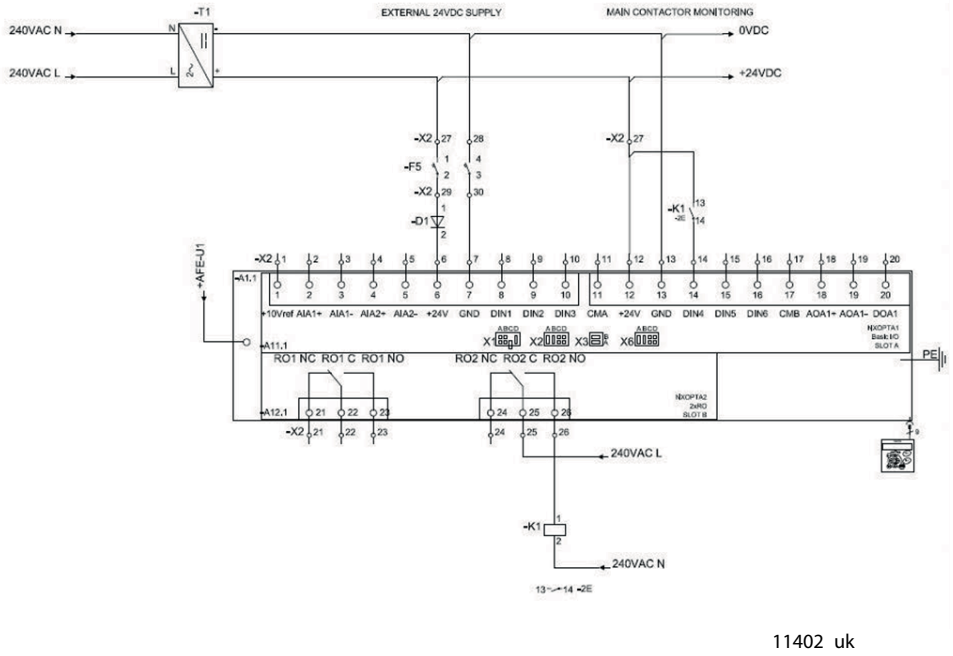

Figure 95. Wiring diagram for control unit

10.9 PARELLING

The power of the input group can be increased by connecting several Active Front End units in parallel. Paralleling refers to Active Front End units connected in the same input transformer. Active Front End units of different power ratings can also be connected in parallel. No communication between the units is required; they work independently. Manufacturer's standard LCL filters must be used for paralleling. If LCL filters other than these are used in Active Front End units connected in parallel, too large circulation currents may be generated between the Active Front End units. All Active Front units must be set for 5% drooping and PWM Synch must be set for Enable. See the Application manual for specific parameter settings.

Each Active Front End unit connected in parallel must have its own short-circuit protection on AC and DC sides. The fuses are selected in accordance with Section x-x. When paralleling, attention must be paid to the sufficient short-circuit capacity of the system.

The derating of Active Front End units connected in parallel is 5% of the DC power; this should be taken into account when selecting the input unit.

If a device is to be isolated from the AC and DC voltages, and other Active Front End units connected in parallel are also to be used, separate isolators are required in the AC input and DC output. The AC input can be isolated using a compact circuit-breaker, an ordinary circuit-breaker or a fuse switch. Contactors are not suitable for isolating the AC input because they cannot be locked in the safe position. The DC output can be isolated using a fuse switch. The pre-charging circuit must also be isolated from the AC input. A load isolation switch or safety isolation switch can be used for this. The device can also be connected to mains even when the other devices connected in parallel are already connected and running. In such a case, the isolated deice must first be pre-charged. When that is done, the AC input can be switched on. After this, the device can be connected to the intermediate DC circuit.

10.10 COMMON PRE-CHARGING CIRCUIT

In case of paralleled Active Front End units, one common pre-charging circuit can be used, see Figure 96. Standard pre-charging circuits can be used if the capacitance of the intermediate circuit not exceeds maximum value. If all paralleled Active Front End units have a common circuit breaker, the breaker can be controlled by one of the Active Front End units. If each paralleled Active Front End unit has its own circuit breaker, each Active Front End controls it's own circuit breaker. The circuit diagram for control, see Figure 94 and Figure 95.

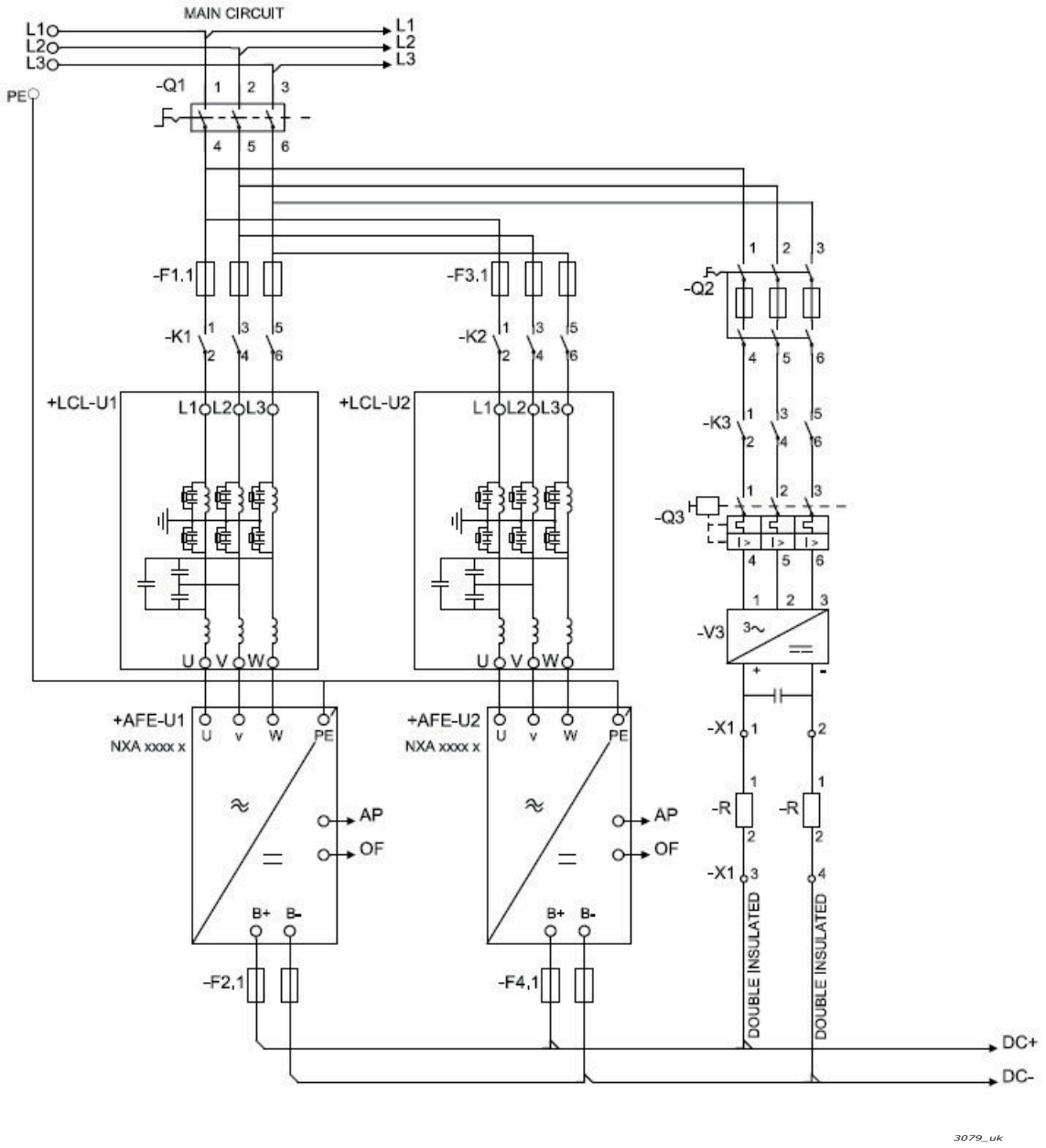

Figure 96. Active Front End units parallel connection with one common pre-charging circuit

10.11 EACH ACTIVE FRONT END UNIT HAS THE PRE-CHARCING CIRCUIT

Each Active Front End can have an own pre-charging circuit, and each unit is controlling it's own pre-charging and main contactor, see Figure 97. One control switch can be used but if an Active Front End unit needs to be controlled independently, separate switches are needed. With this the system is more redundant than with a common pre-charging circuit. The circuit diagram for control, see Figure 94 and Figure 95.

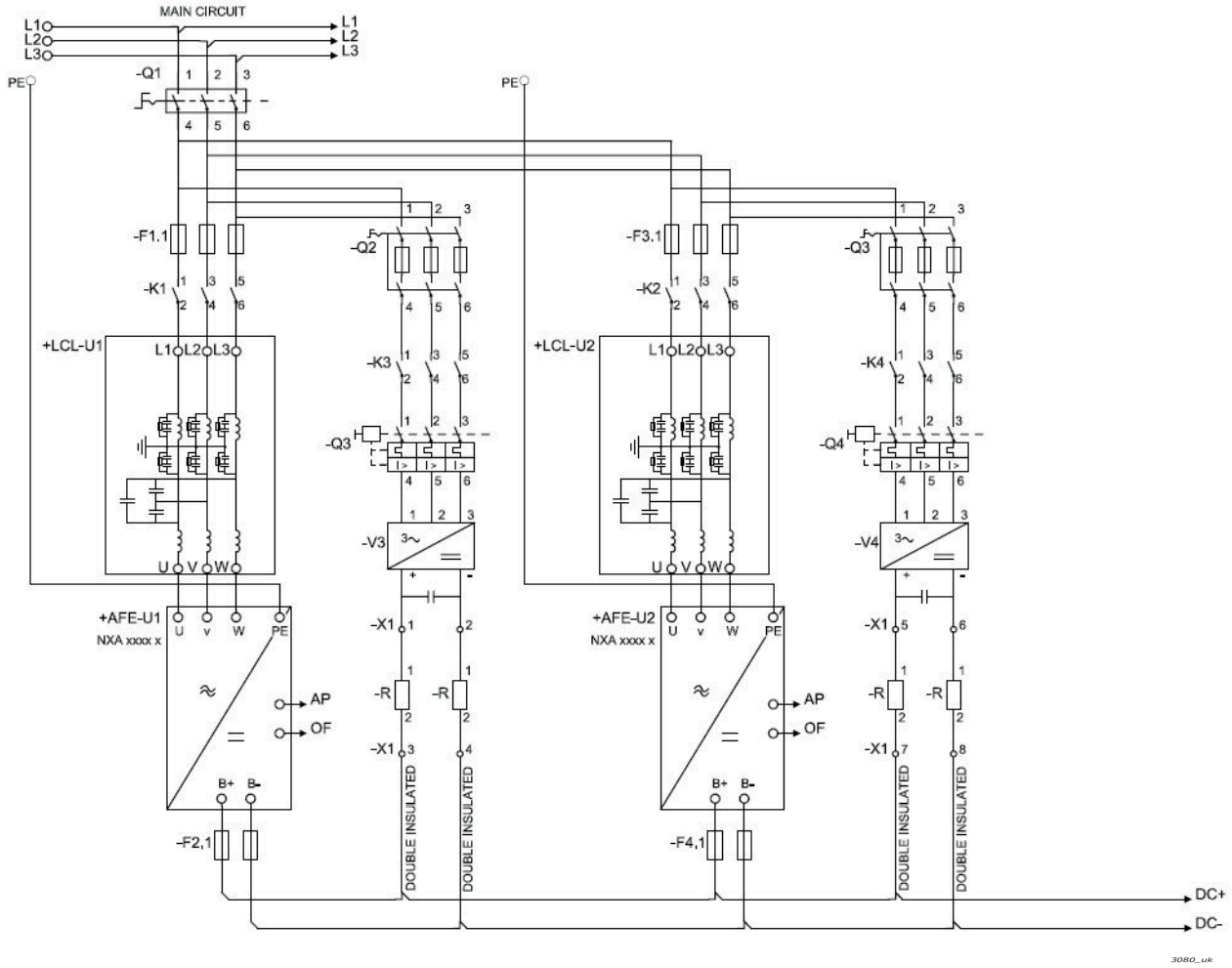

Figure 97. Active Front End units parallel connection with own pre-charging circuits

11. NON-REGENERATIVE FRONT END

11.1 INTRODUCTION

The VACON® NX Non-regenerative Front End (NFE) is used to transfer power from the AC input to the intermediate DC circuit to which the inverter units are connected.

The Non-regenerative Front End configurations consist of the unit itself, choke, pre-charging circuit, control unit with accessories, AC fuses, circuit breaker and DC fuses which you need to take into account when planning the switchgear configuration, see Figure 98. The construction is for 12-pulse network but it can be used as 6-pulse.

Other accessories such as breakers, fuses and pre-charging components etc should be acquired separately.

NOTE! If you use other chokes than the recommended ones, contact your nearest distributor to ensure compatibility.

Scope of supply:

The NFE unit consists of the power module (-TB1), NXP control (-AA1) and its option boards, control accessories and a choice of chokes (-RA1.1 and -RA1.2). The option board type is fixed A1A2BHB100. The option board for fieldbus can be ordered separately and is assembled into the slot E.

These external control accessories need to be assembled separately:

- 2 pieces of input phase monitor relays (-PRM1.1 and -PRM1.2)
- DC-voltage transducer 1500Vdc-10Vdc (-KF10)

11.2 DIAGRAMS

11.2.1 NON-REGENERATIVE FRONT END UNIT WIRING DIAGRAMS

The NFE unit has a typical control circuit. Some of the inputs and outputs can be set with parameters for optional purposes. See the parameter list in Chapter 11.13.

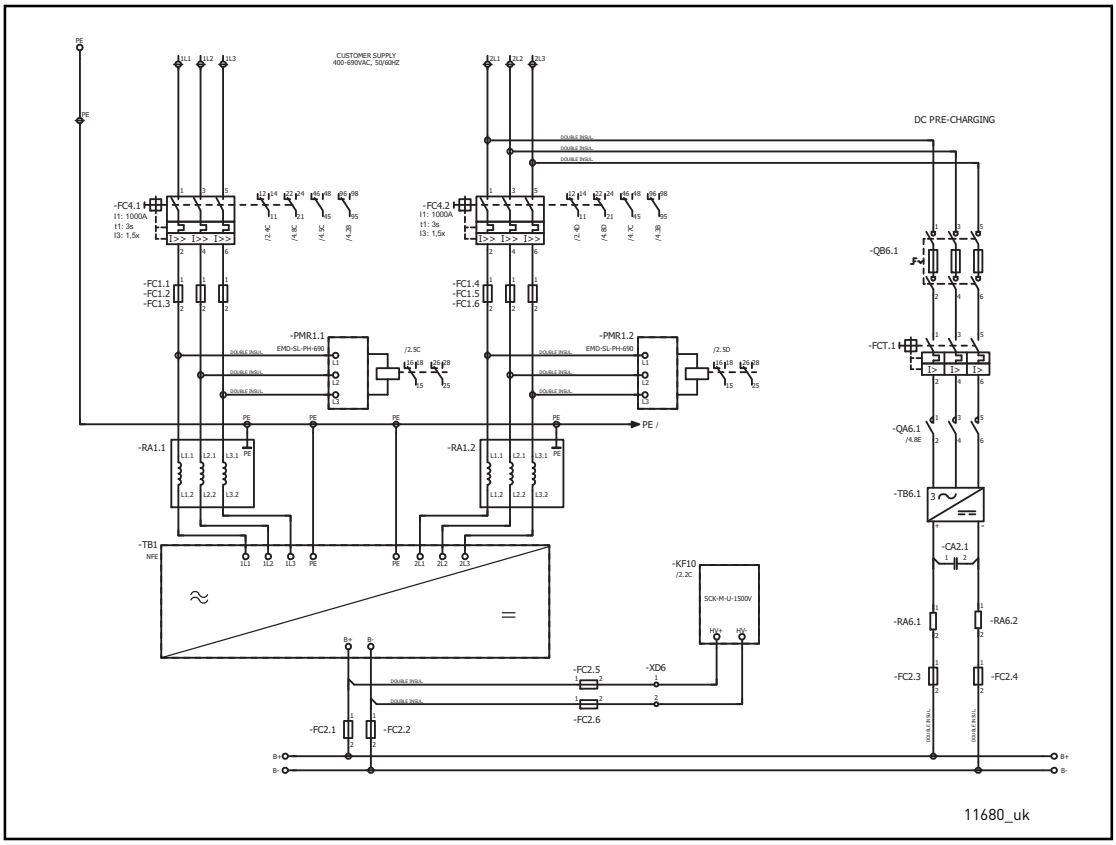

Figure 98. Wiring diagram for NFE unit

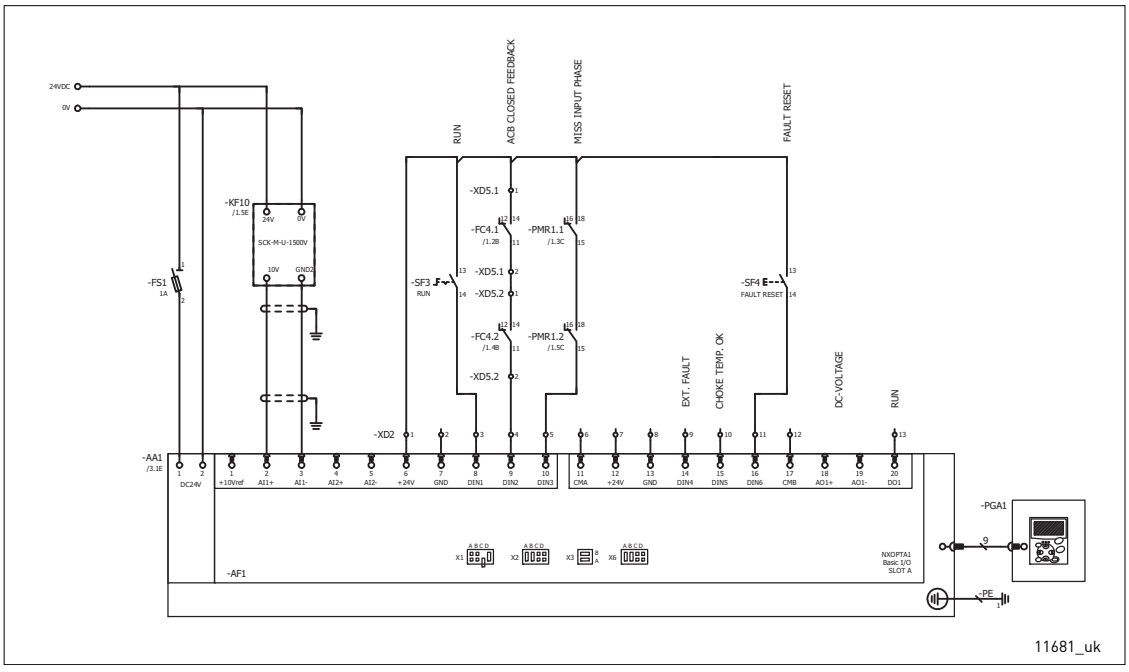

Figure 99. Wiring diagram for controls, OPTA1.

NOTE! The NXP control requires a minimum of 1A external 24Vdc power supply.

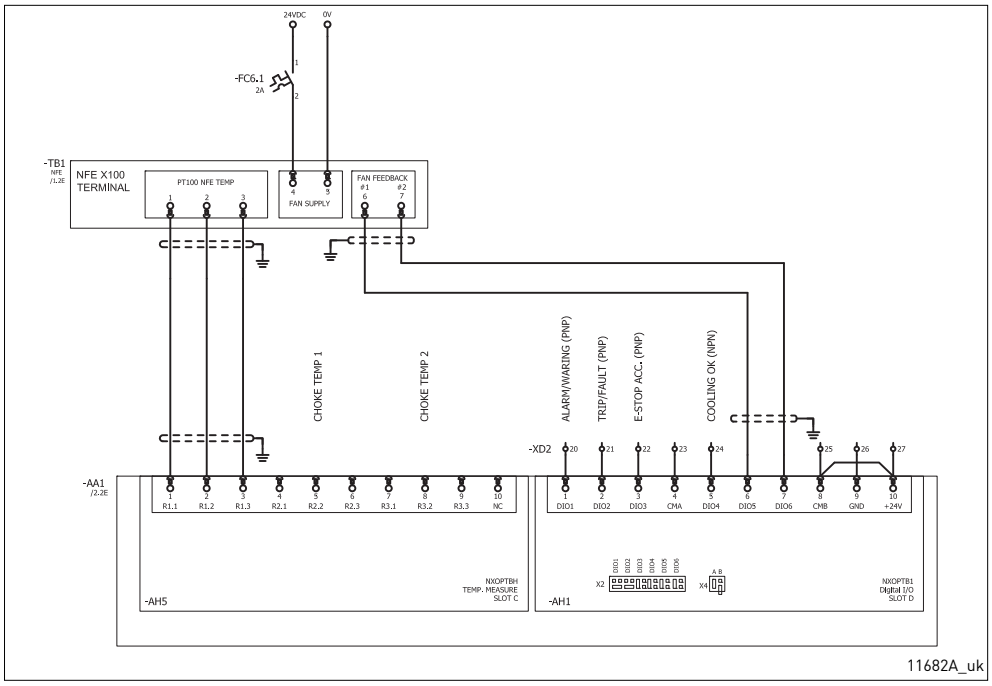

Figure 100. Wiring diagram for controls, OPTBH, OPTB1

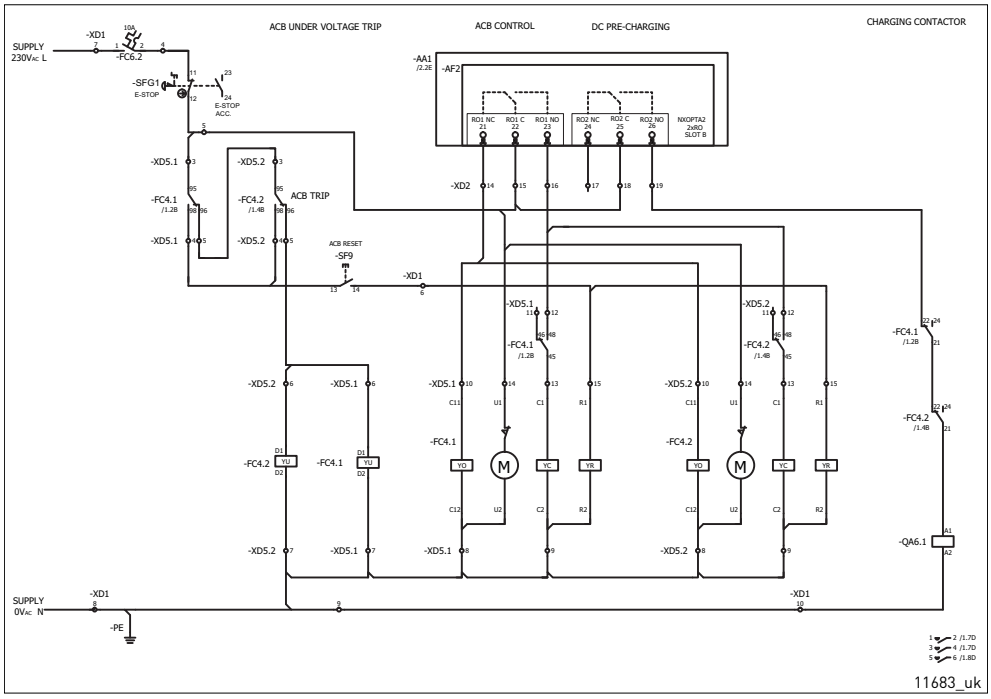

Figure 101. Wiring diagram for controls, OPTA2

The NFE power unit, NXP Control and the external control accessories need external 24Vdc supply. A minimum of 2A power is required to ensure proper operation. See the connection from circuit diagrams Figure 98 - Figure 101. The cable between the NXP control and the power unit has to be shielded and grounded using the cable clamp which is included in the delivery of the drive.

The main circuit breaker control requires typically external 230Vac, and a minimum of 2A.

11.3 INSTALLATION OF THE NFE CONTROL CABLES

A 24Vdc power supply for fans, fan feedback signals and PT100 temperature sensor must be connected to the X100 connector at the NFE module.

1	Remove the protective cover to reveal the X100-connector on the power unit. 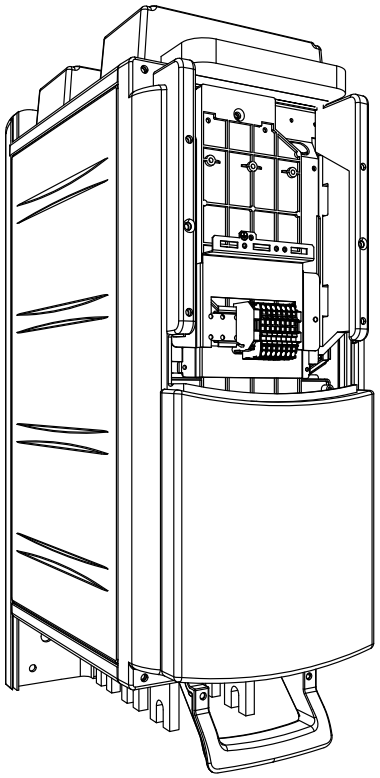 11712_00
2	Connect the wires as shown in Figure 100. The 24Vdc fans require minimum 1A current capacity. Route the cables into the NFE power unit on the top of unit.
3	Using the cable clamp (1) included in the delivery of the drive, ground the shield of the cable between the NXP control and the power unit. 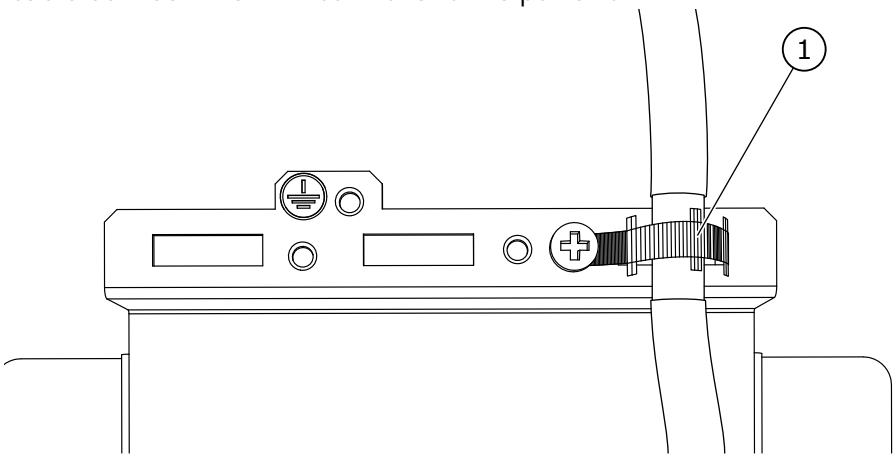 11711_00
4	Close the protective cover.

11.4 TYPE DESIGNATION CODES

In Vacon type designation code, the Non-regenerative Front Unit is characterized by the characters **NXN**. The codes are given below:

NXN	2000	6	A	0	T	0	UWV	A1A2BHB100	without chokes
NXN	2000	6	A	0	T	0	TWV	A1A2BHB100	with external air-cooled chokes
NXN	2000	6	A	0	T	0	WWV	A1A2BHB100	with external liquid-cooled chokes

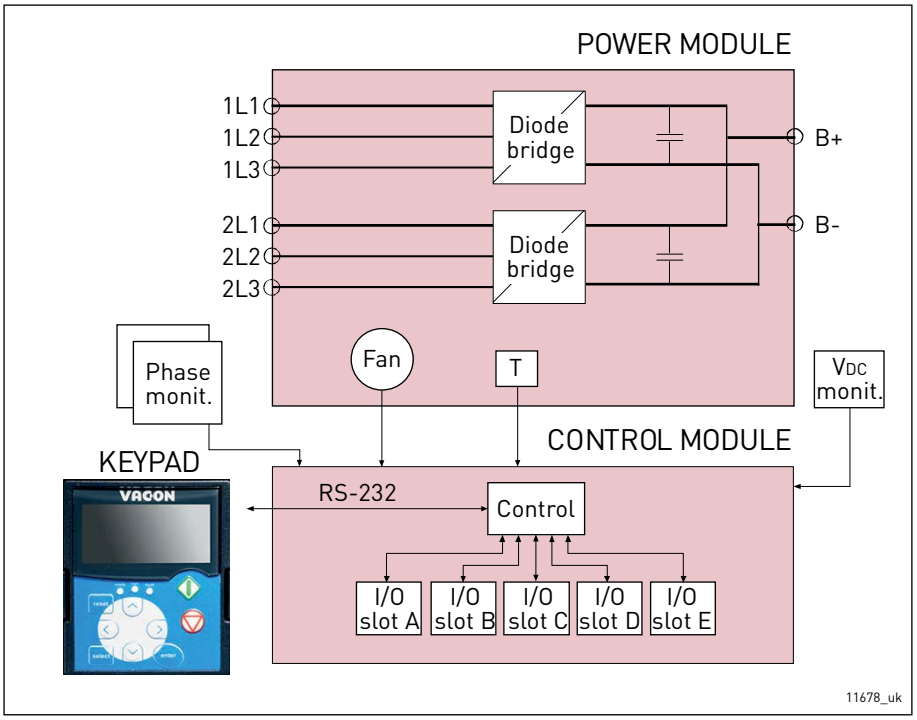

Figure 102. Non-regenerative front end block diagram

11.5 POWER RATINGS

Table 70. VACON® NXN Liquid-Cooled non regenerative front-end, DC bus voltage 465-800 VDC

AC drive type	AC current			DC power				Power loss c/a/T*) [kW]	Chassis
	Thermal I_{th} [A]	Rated I_L [A]	Rated I_H [A]	400 VAC mains I_{th} [kW]	500 VAC mains I_{th} [kW]	400 VAC mains I_L [kW]	500 VAC mains I_L [kW]		
NXN20006A0T0	2000	1818	1333	1282	1605	1165	1458	5.7/0.5/6.2	CH60

Table 71. VACON® NXN Liquid-Cooled non regenerative front-end, DC bus voltage 640-1100 VDC

AC drive type	AC current			DC power				Power loss c/a/T*) [kW]	Chassis
	Thermal I_{th} [A]	Rated I_L [A]	Rated I_H [A]	525 VAC mains I_{th} [kW]	690 VAC mains I_{th} [kW]	525 VAC mains I_L [kW]	690 VAC mains I_L [kW]		
NXN20006A0T0	2000	1818	1333	1685	2336	1531	2014	5.7/0.5/6.2	CH60

11.6 NON-REGENERATIVE FRONT END UNIT TECHNICAL DATA

The technical data for the non-regenerative front end unit, see table below.

Table 72. Technical data

Mains connection	Input voltage U_{in}	2 x 3ph 400...690 VAC (–10%...+10%);
	Input frequency	45...66 Hz
Output connection	Output voltage	U_{in} x 1.35
	Output frequency	DC-voltage
	DC bank capacitance	4800µF
Control characteristics	External NXP control	Run/Stop Control and supervision for external DC precharging circuit Control and supervision for external ACB's DC-voltage supervision Input phase and undervoltage supervision Choke temperature supervision Unit temperarture supervision Fan operation supervision Optional current monitor
Current capacity	Input current	I_{th} 2 x 1000A_{AC}
	Output current	I_{th} 2400A_{DC}
	Overload	No overload
	Power losses	Power loss into coolant: 5.7 kW Power loss into air: 0.5 kW Power losses of the chokes: see Table 76.
Ambient conditions	Ambient operating temperature	–10 °C (no frost)...+50 °C (at I_{th}) The NX Liquid-Cooled drives must be used in an heated indoor controlled environment.
	Installation temperature	0...+70 °C
	Storage temperature	–40 °C...+70 °C; No liquid in heatsink under 0 ºC
	Relative humidity	5 to 96% RH, non-condensing, no dripping water
	Air quality: • chemical vapours • mechanical particles	No corrosive gases IEC 60721-3-3, unit in operation, class 3C2 IEC 60721-3-3, unit in operation, class 3S2 (no conductive dust allowed)
	Altitude	400...500 V: 3000m ASL; in case network is not corner grounded 500...690 V: max. 2000m ASL
	Vibration	5...150 Hz
	Shock EN 50178, EN 60068-2-27	UPS Drop Test (for applicable UPS weights) Storage and shipping: max 15 G, 11 ms (in package)
	Enclosure class	IP00/Open

Table 72. Technical data

EMC	Immunity	Fulfils IEC/EN 61800-3 EMC immunity requirements.
	Emissions	EMC level N for TN/TT networks EMC level T for IT networks
Safety		IEC/EN 61800-5-1 IEC/EN 60204-1 as relevant, (see unit nameplate for more details)
Approvals	Type tested	CE, cULus
	Type approval	
Liquid cooling	Allowed cooling agents	Drinking water (see specification in chapter 5.2) Water-glycol mixture See derating specifications, Table 7
	Temperature of cooling agent	0...43°C input (I_{th}); 43...55°C, contact your local distributor for further information Temperature rise during circulation max. 5°C No condensation allowed
	Cooling agent flow rates	See Table 6.
	System max. working pressure	6 bar
	System max. peak pressure	30 bar
	Pressure loss (at nom. flow)	See Table 8.
Protections		Undervoltage, overvoltage, mains supervision, unit undertemperature, overtemperature, cooling fan operation, ACB operation, DC precharging operation, choke temperature

11.7 DIMENSIONS

Table 73. Non-regenerative front-end unit dimensions

Chassis	Width [mm]	Height [mm]	Depth [mm]	Weight [kg]
CH60	246	673	374	55

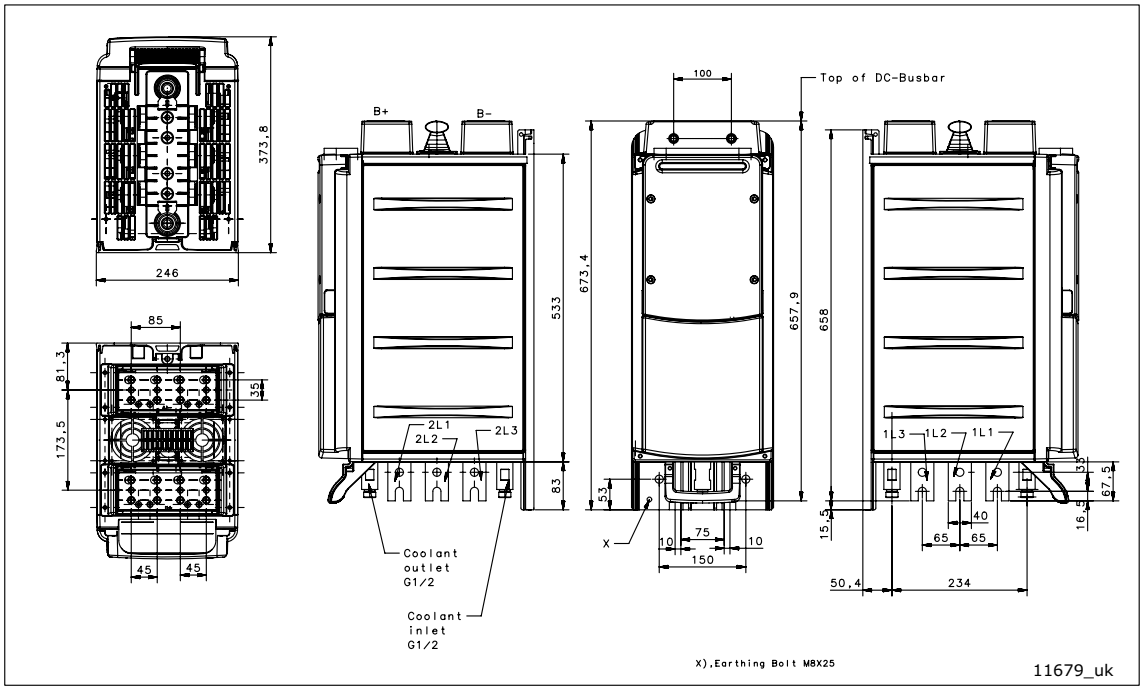

Figure 103. VACON® Liquid-cooled Non-regenerative front end, CH60

Table 74. Terminal connection

Chassis	Earth terminal (mm^2)	Eart terminal Bolt size	Main terminal Bolt size per phase	DC terminal Bolt size per polarity
CH60	25-185	M8	2 x M12	8 x M12

Table 75. Tightening torque of bolts

Bolt	Torque (Nm)	Max inward length (mm)
Grounding bolt	13.5	-
M12	70	22

11.8 CHOKES

Table 76. Type and dimensions for air-cooled chokes

Choke type	Width [mm]	Height [mm]	Depth [mm]	Weight [kg]	Losses to air [W]	Losses to coolant [W]	Cooling
CHK1030N6A0	497	677	307	213	1170*	0	Air
FLU-CHK-1030-6-DL	506	676	302	237	1680	1180	Liquid

*) Losses for one choke. 2 chokes are needed for each L/C NFE, so total losses are 2x1.17 kW.

NOTE! If you use other chokes than the recommended ones, contact your nearest distributor to ensure compatibility.

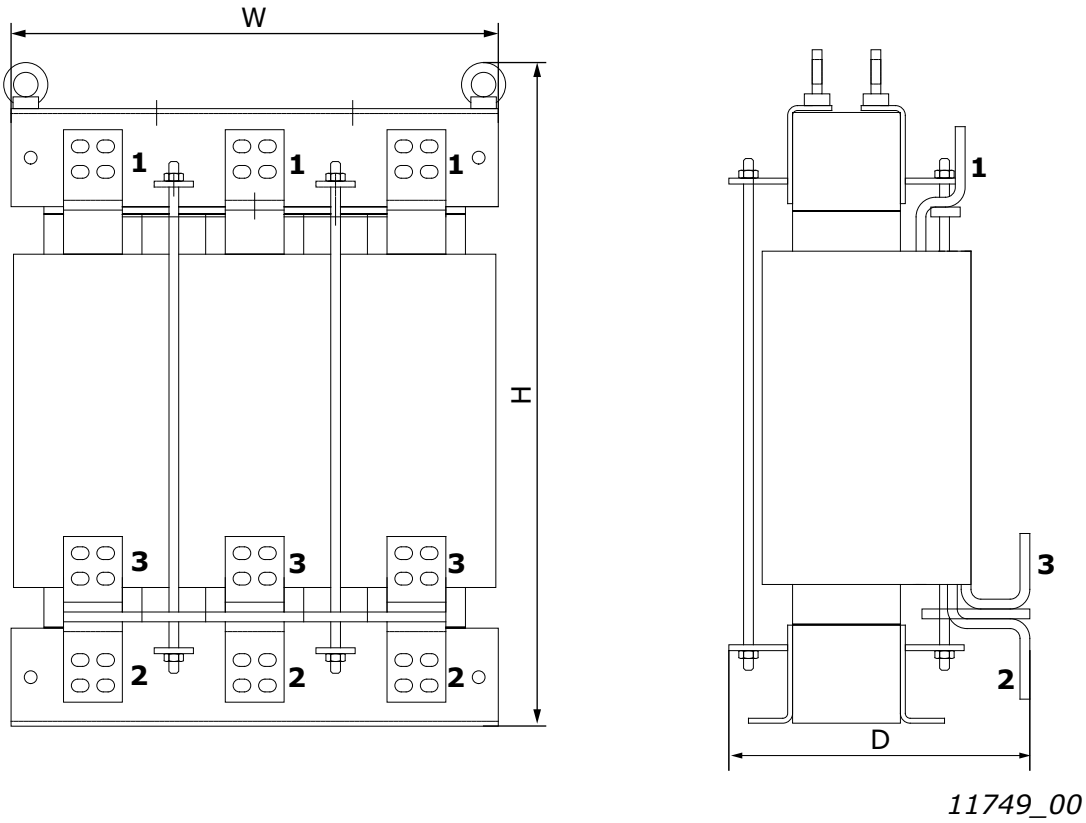

Figure 104. Example of CHK1030N6A0 choke

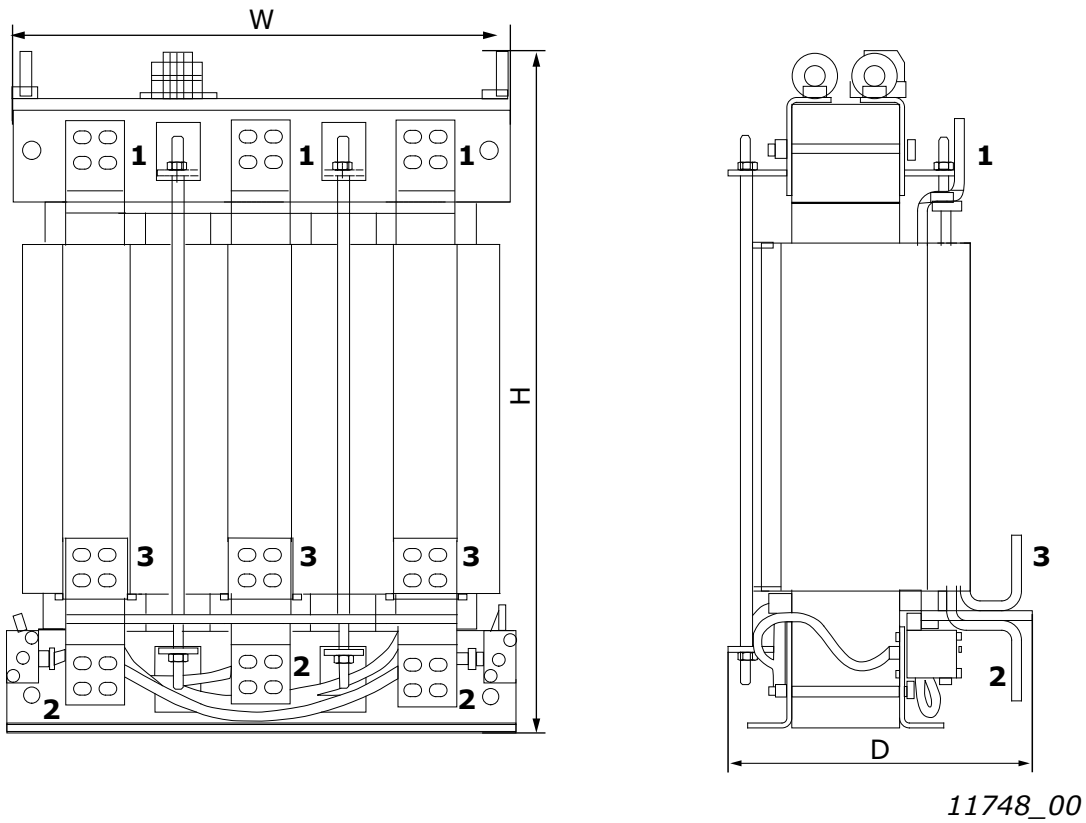

Figure 105. Example of FLU-CHK-1030-6-DL choke

Coolant connection G3/8" female thread.

Table 77.

Supply voltage	AC drive connection (terminal no.)
400-480 Vac	2
500 Vac	3
525-690 Vac	3

11.9 NON-REGENERATIVE FRONT END - FUSE SELECTION

AC fuses are used to protect the input network in case the Non-regenerative Front End unit or the choke is faulty. DC fuses are used to protect the Non-regenerative Front End unit and the choke in case there is a short circuit in the DC buses. If DC fuses are not used, short-circuit in the DC buses will cause a loading of the Non-regenerative Front End unit. Vacon Ltd will not assume any responsibility for damages caused by insufficient protection. **The warranty becomes void if the drive is not equipped with appropriate fuses.**

Main circuit breakers are used to protect chokes and Non-regenerative Front End units from overloading and unbalanced loading. Therefore, both rectifier bridges must be equipped with individual circuit breakers, see Figure 98.

Fuse information

The values in tables are based on max ambient temperature of +50 °C.

The required AC fuse type for the non-regenerative front end unit can be found from Table 78. The required DC fuse type for the non-regenerative front end unit can be found from Table 79.

11.9.1 Fuse sizes, Non-regenerative Front End units

Table 78. AC Fuse sizes for VACON® NX NFE units

Chassis	Code	Fuse, Mersen	U_N [V]	I_N [A]	Size	Bolts	Qty.
CH60	NXN 2000 6	PC233UD69V16CTF/ F300270A	690	1600	2x33	M12	6

Table 79. DC Fuse sizes for VACON® NX NFE units

Chassis	Code	Fuse, Mersen	U_N [V]	I_N [A]	Size	Bolts	Qty.
CH60	NXN 2000 6	PC87UD11C38CP50 / K302988A	1050	3800	284	M12	2

11.9.2 Circuit breaker settings, Non-regenerative Front End units

Table 80. Circuit breaker settings for VACON® NX NFE units

Type	Code	Type, ABB	Qty.	L		I	N
				I1	t1	I3	InN
NFE	NXN 2000 6	X1N16FF3PR331LI	2	0.625	3s	1.5	50%
		X1N12FF3PR331LI	2	0.825	3s	1.5	50%
		X1N10FF3PR331LI	2	1.000	3s	1.5	50%

NOTE! If other circuit breakers are used, the overload and short circuit characteristics must be similar than those of the circuit breakers mentioned above. Overload $I_N = 1000A_{AC}/3sec$, instantaneous short-circuit $I = 1500A_{AC}$. Note that IEC, UL and other related approvals may be required. For UL enclosures, use UL Listed Breakers with category code PAQX or DIVQ.

11.10 Settings

11.10.1 Phase monitor settings

The option boards and phase monitor relays have settings that you may need to adjust. For settings of software application parameters, see Chapter 11.13.

The phase monitor relays (PMR1.1 and PMR1.2) have functions to detect under voltage, phase sequence and phase failure. All of those have to be correct so that the power unit is powered

correctly and stays in run mode. If any of them is not correct, the phase monitor relay's output does not activate and the control unit gives an input phase fault.

1. **"U" Green LED: Supply voltage**
   - LED ON: Supply voltage present
2. **"MIN" Red LED: Lower threshold value (under voltage)**
   - LED flashes: Set threshold value exceeded, set delay time is running
   - LED ON: Set threshold value exceeded, delay time has elapsed
3. **"SEQ" Red LED: Phase failure/phase sequence**
   - LED flashing: phase has failed, set delay time is running
   - LED on: phase has failed, delay time has elapsed
4. **"REL" yellow LED: Output relay**
   - LED ON: Output relay has picked up (OK)
   - LED OFF: Output relay has dropped out (Fail)
5. **"Delay" potentiometer: response delay**
   - 400-690Vac: 0.1s
6. **"MIN" potentiometer: Lower threshold value**
   - 400-500Vac: ≥360Vac
   - 500-690Vac: ≥450Vac

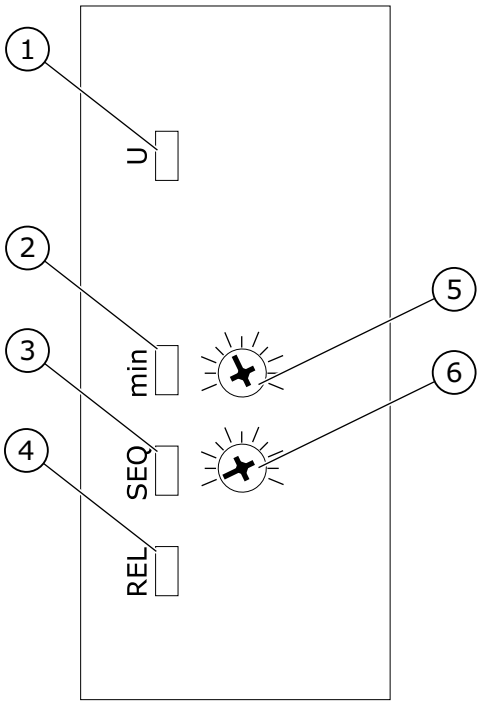

11684_00

11.10.2 OPTION BOARD SETTINGS

The NXP control has fixed option boards A1A2BHB100. The option boards have jumpers which you may need to set according to the external wiring and connections. See the VACON® NX I/O Board User manual for settings. Required board settings for default wiring diagram and components are given below:

Slot A, OPT-A1:

- X1, AI1 mode: voltage input 0...10V
- X2, AI2 mode: according to use
- X3, CMA and CMB grounding: Connected to GND
- X6, AO1 mode: according to use

Slot B, OPT-A2:

- No settings

Slot C, OPT-BH:

- G7.3 parameters as shown in Table 92.

Slot D, OPT-B1:

- X2, DIO mode: DO1, DO2, DI3, DI4, DI5, DI6
- X4: CMA grounding: Connected to GND. CMB grounding: Floating

Slot E: Reserved for optional board such as fieldbus

11.11 DC PRE-CHARGING CIRCUIT

Each Non-regenerative Front End unit requires its own external pre-charging circuit. The purpose of the pre-charging unit is to charge the voltage in the intermediate circuit to a level sufficient for connecting the Non-regenerative Front End unit to the mains. The charging time depends on the capacitance of the intermediate circuit of the total common DC-bus system and the resistance of the charging resistors. The technical specifications of manufacturer's standard pre-charging circuits are shown in Table 81. The pre-charging circuits are suitable for 400-500 Vac and 525-690 Vac.

The pre-charging duration and DC voltage level are monitored by the NXP control. The DC voltage level must be over 40VDC after 1 second charging and final pre-charging voltage level must be reached within the maximum charging time. If these conditions are not reached, a charging fault is issued. The maximum charging time can be set by a parameter.

The pre-charging components can be ordered separately. The pre-charging circuit includes the following components: 2 pcs charging resistors, the contactor, the diode bridge and the snubber capacitor, see Table 82. Each pre-charging circuit has maximum charging capacity, see Table 81. If the capacitance of the intermediate circuit in the total system exceeds the values shown, contact your nearest distributor.

Table 81. Capacitance Min and Max value for Pre-charging circuit

Pre-charging circuit ratings			
Pre charging type	**Resistance**	**Capacitance Min**	**Capacitance Max**
CHARGING-AFE-FFE-FI9	2 x 47 R	4950 µF	30000 µF
CHARGING-AFE-FFE-FI10	2 x 20 R	9900 µF	70000 µF
CHARGING-AFE-FFE-FI13	2 x 11 R	29700 µF	128000 µF

Table 82. Type designation code for the pre-charging components configuration

FI9 AFE / CHARGING-AFE-FFE-FI9				
Item	**Q'ty**	**Description**	**Manufacturer**	**Product Code**
1	1	Diode Bridge	Semikron	SKD 82
2	2	Charcing resistors	Danotherm	CAV150C47R
3	1	Snubber capacitor	Rifa	PHE448
4	1	Contactor	Telemecanique	LC1D32P7

FI10 AFE / CHARGING-AFE-FFE-FI10				
Item	**Q'ty**	**Description**	**Manufacturer**	**Product Code**
1	1	Diode Bridge	Semikron	SKD 82
2	2	Charcing resistors	Danotherm	CBV335C20R
3	1	Snubber capacitor	Rifa	PHE448
4	1	Contactor	Telemecanique	LC1D32P7

Local contacts: http://drives.danfoss.com/danfoss-drives/local-contacts/

FI13 AFE / CHARGING-AFE-FFE-FI13				
Item	**Q'ty**	**Description**	**Manufacturer**	**Product Code**
1	1	Diode Bridge	Semikron	SKD 82
2	2	Charcing resistors	Danotherm	CBV335C11R
3	1	Snubber capacitor	Rifa	PHE448
4	1	Contactor	Telemecanique	LC1D32P7

The Non-regenerative Front End unit must not be connected to mains without pre-charging. In order to ensure the correct operation of the pre-charging circuit, the input circuit-breaker and the pre-charging circuit contactor must be controlled by the Non-regenerative Front End unit. The input circuit-breaker and the pre-charging circuit contactor must be connected as shown in Chapter 11.2.1.

NOTE! You need to double-insulate all wirings that do not have short circuit protections and are used for connecting the pre-charging circuit to the intermediate circuit.

NOTE! Enough space must be reserved around the resistors to ensure sufficient cooling. Do not place any heat sensitive components near the resistors.

11.12 PARALLELING

The power of the input group can be increased by connecting several Non-Regenerative Front End units in parallel. Manufacturer's standard chokes must be used for parallel units. Use of other than these chokes in the Non-Regenerative Front End units connected in parallel may cause a too large current imbalance between the units.

Each Non-Regenerative Front End unit connected in parallel must have its own short-circuit protection on AC and DC sides and own circuit breakers in AC side. When paralleling, attention must be paid to the sufficient short-circuit capacity of the system.

The derating of Non-Regenerative Front End units connected in parallel is 10% of the DC power; this should be taken into account when dimensioning the system.

If a device is to be isolated from the AC and DC voltages, and other Non-Regenerative Front End units connected in parallel are also to be used, separate isolators are required in the AC input and DC output. The AC input can be isolated using a circuit-breaker or a fuse switch. Contactors are not suitable for isolating the AC input because they cannot be locked in a safe position. The DC output can be isolated using a proper load switch. The pre-charging circuit must also be isolated from the AC input by using fuse switch. The device can also be connected to mains even when the other devices connected in parallel are already connected and running. In such a case, the isolated device must first be pre-charged. When that is done, the AC input can be switched on. After this, the device can be connected to the intermediate DC circuit.

11.13 PARAMETERS

The parameters for software version ANCNQ100 are described below.

Table 83. Monitoring values

Code	Parameter	Min	Max	Unit	Default	ID	Desciption
V1.2.1	DC Voltage	0	1500	V	0	7	DC voltage measured by external AI devices
V1.2.2	Current	0	5000	A	0	3	Current measured by external AI devices
V1.2.3	Unit Temperature	-30.0	200.0	deg	0.0	8	Heatsink temp measured by PT100 signal
V1.2.4	Choke Temp 1	-30.0	200.0	deg	0.0	50	Choke temp 1 measured by PT100
V1.2.5	Choke Temp 2	-30.0	200.0	deg	0.0	43	Choke temp 2 measured by second PT100
V1.2.6	Status Word	0	65535		0	20	B0 =PrechargeReady B1 =MC RUN B2 =MC Warning B3 =MC Fault B4 =DIN Run B5 =DIN BreakerFeedback B6 =DIN MissInputPhase B7 =DIN ChokeTempFault B8 =DIN Reset B9 =DOUT DC Precharging B10=DOUT Close MCB B11=DIN Cooling Fan B12=DIN Cooling Fan2 Bit13=DIN External Fault Close Bit14=DIN E Stop Bit15=DIN Cooling OK
V1.2.7	Hour Counter	0	65535	Hour	0	1909	Run Hour counter

Table 84. Basic parameters G2.1

Code	Parameter	Min	Max	Unit	Default	ID	Desciption
P2.1.1	Main Voltage	400	690	V	690	1910	Main supply voltage from network
P2.1.2	PreChargReadyLev	20	100	%	80	1911	Precharge ready level
P2.1.3	MaxChargeTime	0.00	30.00	s	5.00	1912	Max charge time. If the charging time is more than this, a fault will generated
P2.1.4	Password	0	65535		0	1913	Password

Table 85. Digital input G2.2.1

Code	Parameter	Min	Max	Unit	Default	ID	Desciption
P2.2.1.1	Run	0	59		10	1915	Select Digital input signal for Run command

Table 85. Digital input G2.2.1

Code	Parameter	Min	Max	Unit	Default	ID	Desciption
P2.2.1.2	BreakerFeedback	0	59		11	1916	Select digital input signal for Breaker Feedback
P2.2.1.3	Miss Input Phase	0	59		12	1917	Select digital input for missing input phase or low input voltage
P2.2.1.4	External Fault	0	59		13	1918	Select for digital input signal external fault ,normal open logic
P2.2.1.5	Choke Temp	0	59		14	1919	Select for digital input Choke Temp
P2.2.1.6	Fault Reset	0	59		15	1920	Select for digital input signal fault reset
P2.2.1.7	E Stop	0	59		42	1921	Select for digital input signal E-stop feedback
P2.2.1.8	Cooling OK	0	59		43	1922	Select for digital input signal liquid cooling feedback
P2.2.1.9	Fan Sensor 1	0	59		44	1923	Select for digital input signal cooling fan monitor
P2.2.1.10	Fan Sensor 2	0	59		45	1924	Selection of fan sensor2 from digital input signal, default is from OPT-B1 DIN.D5

Table 86. Analog input G2.2.2

Code	Parameter	Min	Max	Unit	Default	ID	Desciption
P2.2.2.1	DC Voltage	0	59		10	1925	Selection for analog input of dc voltage
P2.2.2.2	DC Min Point	0.00	40.00	%	20.00	1926	Percent value corresponds to 0 dc voltage
P2.2.2.3	Max DC Voltage	500	2000	V	1500	1927	Dc voltage measurement devices max range
P2.2.2.4	Current	0	59		11	1928	Selection of analog input signal input current
P2.2.2.5	Current MinPoint	0.00	100.00	%	0.00	1929	Analog input signal min point for current measurement
P2.2.2.6	Max Current	0	32000	A	1000	1930	Max current corresponds to max analog input 100.00%
P2.2.2.7	Unit Temp	0	59		30	1931	Selection of analog input for heatsink Temp
P2.2.2.8	Choke Temp 1	0	59		31	1932	Select analog input signal for choke temp 1 from pt100 signal
P2.2.2.9	Choke Temp 2	0	59		32	1933	Select analog input signal for choke temp 2 from PT100 signal

Table 87. Digital Output G2.3.1

Code	Parameter	Min	Max	Unit	Default	ID	Desciption
P2.3.1.1	Running	0	59		10	1935	Select for digital output signal MC running
P2.3.1.2	Close MCB	0	59		20	1936	Selection for digital output close Main circuit breaker
P2.3.1.3	DC Precharge	0	59		21	1937	Selection digital output signal for DC Precharging signal
P2.3.1.4	Warning	0	59		40	1938	Select for digital output signal mc warning
P2.3.1.5	Fault	0	59		41	1939	Selection for digital output sigal mc fault
P2.3.1.6	No Warning	0	59		0	1940	Inverted warning signal
P2.3.1.6	No Fault	0	59		0	1941	Inverted fault signal

Table 88. Analog Output G2.3.2

Code	Parameter	Min	Max	Unit	Default	ID	Desciption
P2.3.2.1	DC Voltage	0	59		10	1942	Selection for analog output signal dc voltage
P2.3.2.2	Current	0	59		0	1943	Selection for analog output signal for current

Table 89. Protection G2.4

Code	Parameter	Min	Max	Unit	Default	ID	Desciption
P2.4.1	CoolFanFaultMode	1	2		1	1945	Cooling Fan Fault Mode 1=Warning + Fault(after delay) 2=Fault
P2.4.2	Fan Fault Delay	0	15	min	5	1946	The delay time after which a cooling fan fault will generate. Until the delay time is finished, only a warning is on.
P2.4.3	MissPhaseFautMod	0	2		2	1947	Miss input phase fault response mode 0=no action 1=Warning 2=Fault
P2.4.4	MissPhaseFDelay	0.00	60.00	s	1.00	1948	Missing phase signal wait time
P2.4.5	BreakerFaultMode	0	2		2	1949	MCB feedback signal is missing after settled time 0=No action 1=Warning 2=Fault
P2.4.6	Breaker Ack Time	0.00	10.00	s	1.00	1950	Breaker feedback signal wait time

Local contacts: http://drives.danfoss.com/danfoss-drives/local-contacts/

Table 89. Protection G2.4

Code	Parameter	Min	Max	Unit	Default	ID	Desciption
P2.4.7	ChokeTempFauMode	0	3		1	1951	Response to Choke Temp mode when Temp measurement is using digital input (DI)signals or PT100 signal 0=No action (DI) 1=Warn + Fault (after delay) (DI) 2=Fault (DI) 3=PT100
P2.4.8	ChokeOTFaultDela	0	30	min	5	1952	When choke temp fault mode=1, after this time, warning will be changed to fault
P2.4.9	ChokeOTWarnLevel	-30.0	200.0	deg	110.0	1953	Choke temp using pt100. If temp is over this limit, a warning will generate
P2.4.10	ChokeOTFaultLeve	-30.0	200.0	deg	130.0	1954	Choke temp using pt100. If temp is over this limit, a fault will generate
P2.4.11	Ext Fault Mode	0	4		0	1955	External fault mode selection 0=No action 1=Warnng + Fault(after delay) 2=Fault 3=Inv Warning+ Fault(after delay) 4=Inv Fault
P2.4.12	Ext Fault Delay	0	600	min	0	1956	The Delay Time for triggering an external fault after an external warning is active.
P2.4.13	CoolingFaultMode	0	4		0	1957	Fault mode selection for liquid cooling fault from digital input signal 0= No action 1= Warning + Fault(after delayed) 2= Fault 3= Inv Warning + Fault (after delay) 4= Inv Fault
P2.4.14	CoolingFaultDela	0	3600	s	1	1958	A delay time for triggering a liquid fault after liquid warning is active
P2.4.15	E Stop Mode	0	4		0	1959	E stop mode selection 0=No action 1=Warning, ditial input goes to TRUE 2=Fault, digital input goes to TRUE 3=Inv Warning, digital input goes to FALSE 4=Inv Fault, digital input goes to FALSE

Table 90. Fieldbus G2.5

Code	Parameter	Min	Max	Unit	Default	ID	Desciption
P2.5.1	Process Data IN1	0	10000		0	876	
P2.5.2	Process Data IN2	0	10000		0	877	
P2.5.3	Process Data IN3	0	10000		0	878	
P2.5.4	Process Data IN4	0	10000		0	879	
P2.5.5	Process Data IN5	0	10000		0	880	
P2.5.6	Process Data IN6	0	10000		0	881	
P2.5.7	Process Data IN7	0	10000		0	882	
P2.5.8	Process Data IN8	0	10000		0	883	
P2.5.9	ProcessData Out1	0	10000		0	852	
P2.5.10	ProcessData Out2	0	10000		0	853	
P2.5.11	ProcessData Out3	0	10000		0	854	
P2.5.12	ProcessData Out4	0	10000		0	855	
P2.5.13	ProcessData Out5	0	10000		0	856	
P2.5.14	ProcessData Out6	0	10000		0	857	
P2.5.15	ProcessData Out7	0	10000		0	858	
P2.5.16	ProcessData Out8	0	10000		0	859	

Table 91. Advanced par G2.6

Code	Parameter	Min	Max	Unit	Default	ID	Desciption
P2.6.1	OT Alarm Level	-30.0	55.0	deg	55.0	1961	If CH62 PT100 sensor is over this level, alarm will generated
P2.6.2	Fan Type	1	2		2	1962	Cooling fan type selection 1=fan sensor is status sinal, if signal is low, fault will generate 2=also status signal, fan sensor signal is inverted, if signal is high, fault will generate
P2.6.3	Run Start	0	1		0	1963	Start mode selection 0=Rising Edge, run command need rising edge to restart the system 1=Auto Start, run command active, system will auto restart

Local contacts: http://drives.danfoss.com/danfoss-drives/local-contacts/

Table 92. OPT-BH parameters G7.3

Code	Parameter	Min	Max	Unit	Default	ID	Desciption
7.3.1.1	Sensor 1 type	0	6		0		0=No Sensor **1=PT100** 2=PT1000 3=Ni1000 4=KTY84 5=2 x PT100 6=3 x PT100
7.3.1.2	Sensor 2 type	0	6		0		See above
7.3.1.3	Sensor 3 type	0	6		0		See above

NFE's internal temperature sensor is PT100. Set 7.3.1.1 = 1.

11.14 CH60 LIQUID-COOLED NFE PROTECTIONS

The protections for software version ANCNQ100 are described below.

Table 93. Voltage protections

Main voltage P2.1.1	$400V_{AC} \leq P2.1.1 \leq 500V_{AC}$	$500V_{AC} < P2.1.1 \leq 690V_{AC}$
Under voltage trip	$333V_{DC}$	$573V_{DC}$
Under voltage alarm	$371V_{DC}$	$633V_{DC}$
Over voltage alarm	$830V_{DC}$	$1150V_{DC}$
Over voltage trip	$911V_{DC}$	$1250V_{DC}$

Table 94. Unit temperature protections

Unit temperature	V1.2.3
Under temp. trip	-10°C
Over temp. alarm (*1)	55°C
Over temp. trip	60°C

(*1) Temperature level may be changed by a parameter

Table 95. Choke temperature protections

Choke temperature	V1.2.4 & V1.2.5
Over temp. alarm (*2)	110°C
Over temp. trip (*2)	130°C

(*2) Chokes require PT100 sensors. Temperature levels may be changed by parameters

11.15 FAULT CODES

When a fault is detected by the NFE control electronics, the drive is **stopped** and main circuit breakers and the charging switch is controlled into open state, which will then disconnect the NFE module from the mains supply. The fault can be reset with the Reset button on the control keypad or via the I/O terminal. Resetting the faults will clear the fault and initiate new start-up procedure of the NFE unit. The faults are stored in the Fault history menu (M5) which can be browsed. The different fault codes you will find in the table below.

The fault codes, their causes and correcting actions for software version ANCNQ100 are presented in the table below.

Table 96. Fault codes

Fault code	Fault	Possible cause	Correcting measures
2	Overvoltage	The DC-link voltage has exceeded the limits. - too short a deceleration time - high overvoltage spikes in supply Fault: - 911Vdc, Main Voltage P2.1.1 400-500Vac - 1250Vdc, Main Voltage P2.1.1 500-690Vac Warning: - 860vdc, Main Voltage P2.1.1 400-500Vac - 1150Vdc, Main Voltage P2.1.1 500-690Vac	• Set deceleration time longer. • Use brake chopper or brake resistor (available as options). • Set over voltage control active with INU devices. • Check input voltage.
4	Charging fault	The pre-set charging time (defined by MaxChargeTime parameter P.2.1.3, default 5 sec) has been exceeded. DC voltage must rise above 40VDC in 1 second	• Check the external charging circuit & charging resistor dimensioning • Check P.2.1.3 MaxChargeTime
9	UnderVoltage	The DC-link voltage has decreased under the limits defined. - Too low supply voltage. - Component failure. - Defect input fuse. - External charge switch not closed. Fault: - 333Vdc; Main Voltage P2.1.1 400-500Vac - 573Vdc; Main Voltage P2.1.1 500-690Vac Warning: - 371Vdc; Main Voltage P2.1.1 400-500Vac - 633Vdc; Main Voltage P2.1.1 500-690Vac	• If there is a temporary supply voltage break, RESET the fault and RESTART the drive. • Check the supply voltage. If the measured value is sufficient, internal failure has occurred. • Check the electrical network, if any breaks occur. • If the fault re-occurs, contact your local/ nearest service center or distributor. Report carefully all the used software, application and all options.

Table 96. Fault codes

Fault code	Fault	Possible cause	Correcting measures
10	Input phase	External electronic monitoring relay have detected undervoltage, phase sequence or phase failure issue. • min. threshold value: 360Vac for 400-500Vac supply voltage • min. threshold value: 470Vac for 525-690Vac supply voltage • response delay is set to be 0.1 sec Various causes: - Supply phase failure - Supply fuse failure - Incorrect Mains cabling - Grid interruption	Check EMD relay settings, Signal wiring, supply voltage, fuses, supply cable, rectifying bridge.
13	Undertemperature	Power module heatsink temperature is under –10 °C.	Power module is in a too cold place or coolant agent is too cold. Check the ambient & coolant temperature. Check the signal wiring.
14	Overtemperature	Fault: Power module heatsink temperature is over 60 °C. Warning: Power module heatsink temperature is over 55 °C.	• Check Coolant flow and temperature • Check the ambient temperature. • Check the cooling fan condition • Check the power module loading • Check the signal wiring
32	Fan cooling	Jammed cooling fan - Cooling Fan failure - Cooling Fan is not rotating	• Check the signal wiring • Change the cooling fans
51	Ext Fault	External fault digital input have triggered the fault	• Check the signal wiring • Check External Fault input
56	Choke Temp	Over temperature switch feedback or Fault: The temperature of the external input AC choke is over 130 °C (measured from PT100 thermistor). Warning: The temperature of the external input AC choke is over 110 °C. (measured from PT100 thermistor)	• Check input AC choke cooling conditions • Check the power module loading • Check the signal wiring

Table 96. Fault codes

Fault code	Fault	Possible cause	Correcting measures
60	Cooling	Cooling OK digital input for liquid cooling feedback have triggered the fault	• Check liquid cooling • Check the signal wiring • Check Cooling OK input
63	EmergencyStop	E-stop digital input for emergency stop feedback have triggered the fault	• Check Main Circuit Breaker functionality • Check signal wiring
64	Breaker Trip	MCBs Feedback signal missing after settled time defined with parameter Breaker Ack Time P2.4.6.	• Check Main Circuit Breaker functionality • Check signal wiring

Local contacts: http://drives.danfoss.com/danfoss-drives/local-contacts/

12. BRAKE CHOPPER UNIT (NXB)

12.1 INTRODUCTION

The VACON® NXB (Brake chopper unit) is a unidirectional power converter for the supply of excessive energy from a common DC bus drive line-up to resistors where the energy is dissipated as heat. External resistors are needed. The NXB improves the DC-link voltage controllability as well as enhances the motor drives performance in dynamic applications.

Mechanically, the NXB module is based on inverter unit construction. The dynamic DC energy brake function is achieved through a specific NXB system software. Several NXB modules can be installed parallelly in order to increase the braking capacity, however, the modules require mutual synchronization.

12.2 TYPE DESIGNATION CODE

In Vacon type designation code, the Brake Chopper Unit is characterized by number 8, for example:

NXB	0300	5	A	0	T	0	**8**WF	A1A2000000

12.3 DIAGRAMS

12.3.1 NXB BRAKE CHOPPER UNIT BLOCK DIAGRAM

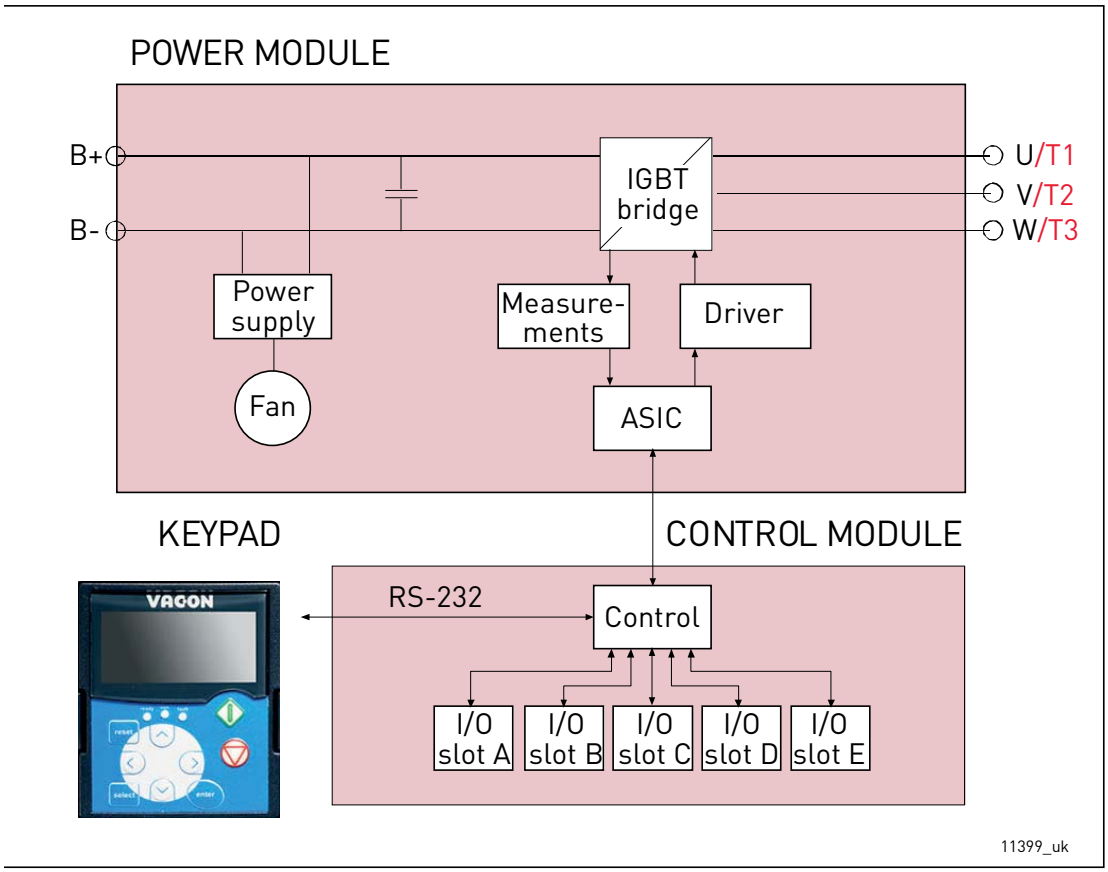

Figure 106. BCU block diagram

12.3.2 VACON® NXB TOPOLOGIES AND CONNECTION

NXB (Brake Chopper Unit) + one resistor
is a braking power control unit.
Unnecessary energy is burnt off

NXB (Brake Chopper Unit) + two resistors
is a braking power control unit.
Unnecessary energy is burnt off

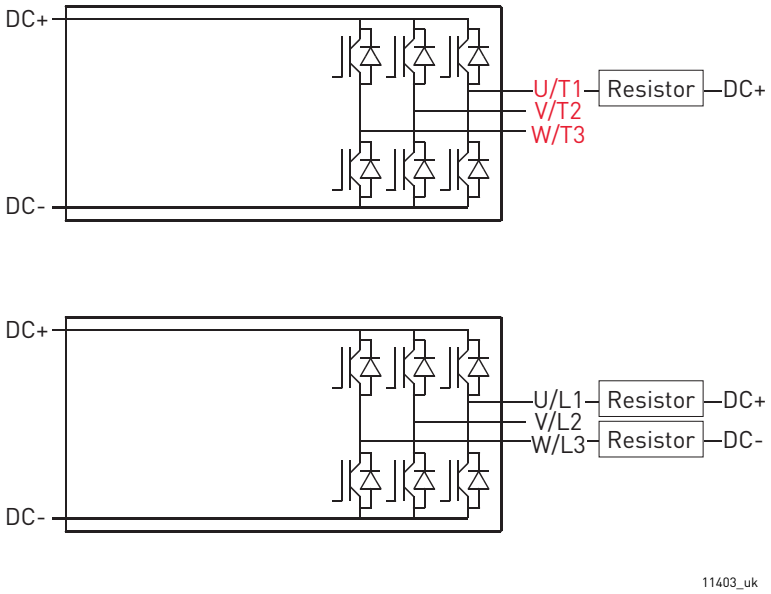

Figure 107. Brake chopper unit topology

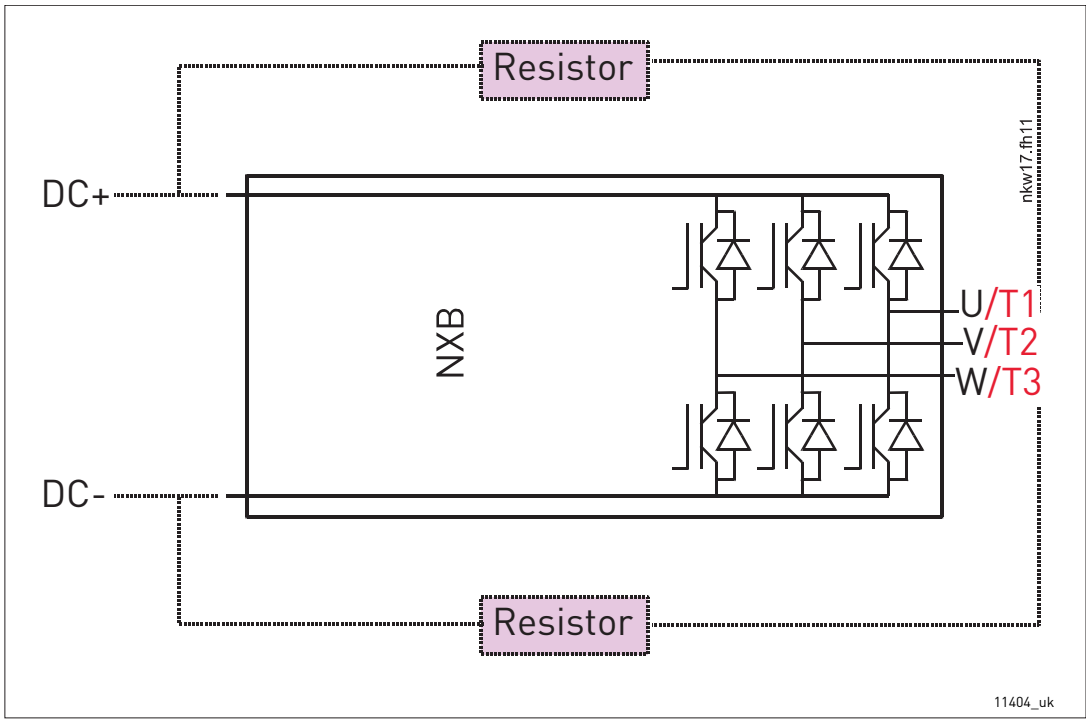

Figure 108. VACON® Brake Chopper Unit connections

12.4 BRAKE CHOPPER UNIT TECHNICAL DATA

*) NX_8 AC drives only available as Ch6x AFE/BCU/INU units.

Table 97. Technical specification for VACON® NXB Liquid-Cooled brake chopper unit

Supply connection	Input voltage U_{in}	NX_5: 400…500 VAC (–10%…+10%); 465…800 VDC (–0%…+0%) NX_6: 525…690 VAC (–10%…+10%); 640…1100 VDC (–0%…+0%) NX_8: 525…690 VAC (–10%…+10%); 640…1136 VDC (–0%…+0%)*)
	Input current	DC I_{in} ~ I_{out}
	DC bank capacitance	Voltage class 500 V: Ch3 (16-31A units): 600 µF Ch3 (38-61A units): 2400 µF CH4: 2400 µF CH5: 7200 µF CH61: 10800 µF CH62: 10800 µF Voltage class 690 V: CH61: 4800 µF CH62: 4800 µF
	Starting delay	2…5 s
Resistor connection	Output voltage	U_{in} ~ U_{out}
	Continuous output current	I_{br}: Max ambient temperature +50 °C
	Connection order	R1 U – DC+ R2 W – DC-
Control characteristics	Control method	Voltage level control, default U_n+18%
	Parallel BCU	Requires synchronization
Ambient conditions	Ambient operating temperature	–10 °C (no frost)…+50 °C (at I_{th}) The VACON® NX Liquid-Cooled drives must be used in a heated indoor controlled environment
	Installation temperature	0…+70 °C
	Storage temperature	–40 °C…+70 °C; No liquid in heatsink under 0 °C
	Relative humidity	5 to 96% RH, non-condensing, no dripping water
	Air quality: - chemical vapours - mechanical particles	IEC 721-3-3, unit in operation, class 3C2 IEC 721-3-3, unit in operation, class 3S2 • No conductive dust allowed • No corrosive gases
	Altitude	NX_5 (380…500 V): max. 3000 m (in case network is not corner grounded) NX_6: max. 2000 m. For further requirements, contact factory 100-% load capacity (no derating) up to 1,000 m; above 1,000 m derating of maximum ambient operating temperature by 0.5 °C per each 100 m is required.

Table 97. Technical specification for VACON® NXB Liquid-Cooled brake chopper unit

	Vibration EN 50178/EN 60068-2-6	5…150 Hz Displacement amplitude 0.25 mm (peak) at 3…31 Hz Max acceleration amplitude 1 G at 31…150 Hz
	Shock EN 50178, EN 60068-2-27	UPS Drop Test (for applicable UPS weights) Storage and shipping: max 15 G, 11 ms (in package)
	Cooling capacity required	See Table 15.
	Unit enclosure class	IP00/Open Frame standard in entire kW/HP range
	Pollution degree	PD2
EMC	Immunity	Fulfils IEC/EN 61800-3 EMC immunity requirements
Safety		CE, UL, IEC/EN 61800-5-1 (2007) (see unit nameplate for more detailed approvals) IEC 60664-1 and UL840 in overvoltage category III.
Control connections	Analogue input voltage	0…+10 V, Ri = 200 kW, (–10 V…+10 V joystick control) Resolution 0.1%, accuracy ±1%
	Analogue input current	0(4)…20 mA, Ri = 250 W differential
	Digital inputs (6)	Positive or negative logic; 18…30 VDC
	Auxiliary voltage	+24 V, ±10%, max. 250 mA
	Output reference voltage	+10 V, +3%, max. load 10 mA
	Analogue output	0(4)…20 mA; RL max. 500 W; Resolution 10 bit; Accuracy ±2%
	Digital outputs	Open collector output, 50 mA/48 V
	Relay outputs	2 programmable change-over relay outputs Switching capacity: 24 VDC/8 A, 250 VAC/8 A, 125 VDC/0.4 A Min. switching load: 5 V/10 mA
Protections	Overvoltage trip limit	NX_5: 911 VDC NX_6: (CH61, CH62, CH63 & CH64): 1258 VDC NX_6: (Other chassis): 1200 VDC NX_8: (CH61, CH62, CH63 & CH64): 1300 VDC
	Undervoltage trip limit	NX_5: 333 VDC; NX_6: 461 VDC; NX_8: 461 VDC (all VDC)
	Overcurrent protection	Yes
	Unit overtemperature protection	Yes
	Resistor overtemperature protection	Yes
	Wrong connection protection	Yes
	Short-circuit protection of +24 V and +10 V reference voltages	Yes

Table 97. Technical specification for VACON® NXB Liquid-Cooled brake chopper unit

Liquid cooling	Allowed cooling agents	Drinking water (see specification on page 46) Water-glycol mixture See derating specifications, Chapter 5.3.
	Volume	See Table 19.
	Temperature of cooling agent	0...35 °C input (Ibr); 35...55 ºC: derating required, see Chapter 5.3 . Max. temperature rise during circulation 5 °C No condensation allowed. See Chapter 5.2.1.
	Cooling agent flow rates	See Table 15.
	System max. working pressure	6 bar
	System max. peak pressure	30 bar
	Pressure loss (at nominal flow)	Varies according to size. See Table 17 .

12.5 BCU POWER RATINGS

12.5.1 VACON® NXB; DC VOLTAGE 460–800 V

Table 98. Power ratings of VACON® NXB, supply voltage 460–800 Vdc

Braking voltage 460-800 VDC							
NXB type	Loadability				Braking capacity		Chassis
	BCU rated cont. braking current, I_{br} [A]	Rated min resistance at 800 VDC [Ω]	Rated min resistance at 600 VDC [Ω]	Rated max input current [Adc]	Rated cont. braking power 2*R at 800 VDC [kW]*	Rated cont. braking power 2*R at 600 VDC [kW]**	
NXB_0031 5	2*31	25.7	19.5	62	49	37	CH3
NXB_0061 5	2*61	13.1	9.9	122	97	73	CH3
NXB_0087 5	2*87	9.2	7.0	174	138	105	CH4
NXB_0105 5	2*105	7.6	5.8	210	167	127	CH4
NXB_0140 5	2*140	5.7	4.3	280	223	169	CH4
NXB_0168 5	2*168	4.7	3.6	336	267	203	CH5
NXB_0205 5	2*205	3.9	3.0	410	326	248	CH5
NXB_0261 5	2*261	3.1	2.3	522	415	316	CH5
NXB_0300 5	2*300	2.7	2.0	600	477	363	CH61
NXB_0385 5	2*385	2.1	1.6	770	613	466	CH61
NXB_0460 5	2*460	1.7	1.3	920	732	556	CH62
NXB_0520 5	2*520	1.5	1.2	1040	828	629	CH62
NXB_0590 5	2*590	1.4	1.1	1180	939	714	CH62
NXB_0650 5	2*650	1.2	1.0	1300	1035	786	CH62
NXB_0730 5	2*730	1.1	0.9	1460	1162	833	CH62

*. 800 VDC equals U_{brake} at 500 VAC

**. 600 VDC equals U_{brake} at 380 VAC

For dimensions of BCU units, see Table 14.

NOTE! The rated currents in given ambient (+50 °C) and coolant (+30°) temperatures are achieved only when the switching frequency is equal to or less than the factory default.

NOTE! Braking power: $P_{brake} = 2*U_{brake}^2 / R_{brake}$

NOTE! Max input DC current: $I_{in\_max} = P_{brake\_max} / U_{brake}$

12.5.2 VACON® NXB; DC VOLTAGE 640–1100 V

Table 99. Power ratings of VACON® NXB, supply voltage 640–1100 Vdc

Braking voltage 640-1100 VDC ***)							
	Loadability				Braking capacity		
NXB type	BCU rated cont. braking current, I_{br} [A]	Rated min resistance at 1100 VDC [Ω]	Rated min resist-ance at 840 VDC [Ω]	Rated max input current [Adc]	Rated cont. braking power 2*R at 1100 VDC [kW]*	Rated cont. braking power 2*R at 840 VDC [kW]**	Chassis
NXB_0170 6	2*170	6.5	4.9	340	372	282	CH61
NXB_0208 6	2*208	5.3	4.0	416	456	346	CH61
NXB_0261 6	2*261	4.2	3.2	522	572	435	CH61
NXB_0325 6	2*325	3.4	2.6	650	713	542	CH62
NXB_0385 6	2*385	2.9	2.2	770	845	643	CH62
NXB_0416 6	2*416	2.6	2.0	832	913	693	CH62
NXB_0460 6	2*460	2.4	1.8	920	1010	767	CH62
NXB_0502 6	2*502	2.2	1.7	1004	1100	838	CH62

*. 1100 VDC equals U_{brake} at 690 VAC

**. 840 VDC equals U_{brake} at 525 VAC

***) Mains voltage 640-1136 VDC for NX_8 inverter units.

For dimensions of BCU units, see Table 10.

NOTE! The rated currents in given ambient (+50 °C) and coolant (+30°) temperatures are achieved only when the switching frequency is equal to or less than the factory default.

NOTE! Braking power: $P_{brake} = 2*U_{brake}^2 / R_{resistor}$ when 2 resistors are used

NOTE! Max input DC current: $I_{in\_max} = P_{brake\_max} / U_{brake}$

12.6 VACON® BRAKE RESISTORS AND BRAKE CHOPPER DIMENSIONING

12.6.1 BRAKING ENERGY AND LOSSES

Table 100. VACON® standard brake resistors and NXB energy, mains voltage 465–800 Vdc

Mains voltage 465-800 VDC					
BCU type	BCU output			BCU Power loss at full braking	Chassis
	Resistor	Brake energy			
	Resistor type & R[Ω]	Light duty 5 sec (kJ)	High Duty 10 sec (kJ)	c/a/T*) [kW]	
NXB 0031 5	BRR0031 / 63	82	220	0.7/0.2/0.9	CH3
NXB 0061 5	BRR0061 / 14	254	660	1.3/0.3/1.5	CH3
NXB 0087 5	BRR0061 / 14	254	660	1.5/0.3/1.8	CH4
NXB 0105 5	BRR0105 / 6.5	546	1420	1.8/0.3/2.1	CH4
NXB 0140 5	BRR0105 / 6.5	546	1420	2.3/0.3/2.6	CH4
NXB 0168 5	BRR0105 / 6.5	546	1420	2.5/0.3/2.8	CH5
NXB 0205 5	BRR0105 / 6.5	546	1420	3.0/0.4/3.4	CH5
NXB 0261 5	BRR0105 / 6.5	546	1420	4.0/0.4/4.4	CH5
NXB 0300 5	BRR0300 / 3.3	1094	2842	4.5/0.4/4.9	CH61
NXB 0385 5	BRR0300 / 3.3	1094	2842	5.5/0.5/6.0	CH61
NXB 0460 5	BRR0300 / 3.3	1094	2842	5.5/0.5/6.0	CH62
NXB 0520 5	BRR0520 / 1.4	2520	6600	6.5/0.5/7.0	CH62
NXB 0590 5	BRR0520 / 1.4	2520	6600	7.5/0.6/8.1	CH62
NXB 0650 5	BRR0520 / 1.4	2520	6600	8.5/0.6/9.1	CH62
NXB 0730 5	BRR0730 / 0.9	3950	10264	10.0/0.7/10.7	CH62

Table 101. VACON® standard brake resistors and NXB energy, mains voltage 640–1100 Vdc

Mains voltage 640-1100 VDC					
BCU type	BCU output			BCU	Chassis
	Resistor	Brake energy		Power loss at full braking	
	Resistor type & R[Ω]	Light Duty 5 sec (kJ)	High Duty 10 sec (kJ)	c/a/T* [kW]	
NXB 0170_6	BRR0208 / 7	968	2516	3.6/0.2/3.8	Ch61
NXB 0208_6	BRR0208 / 7	968	2516	4.3/0.3/4.6	Ch61
NXB 0261_6	BRR0208 / 7	968	2516	5.4/0.3/5.7	Ch61
NXB 0325_6	BRR0208 / 7	968	2516	6.5/0.3/6.8	Ch62
NXB 0385_6	BRR0208 / 7	968	2516	7.5/0.4/7.9	Ch62
NXB 0416_6	BRR0416 / 2.5	2710	7046	8.0/0.4/8.4	Ch62

Local contacts: http://drives.danfoss.com/danfoss-drives/local-contacts/

Table 101. VACON® standard brake resistors and NXB energy, mains voltage 640–1100 Vdc

Mains voltage 640-1100 VDC					
NXB 0460_6	BRR0416 / 2.5	2710	7046	8.7/0.4/9.1	Ch62
NXB 0502_6	BRR0416 / 1.7	3986	10362	9.8/0.5/10.3	Ch62

*. c = power loss into coolant; a = power loss into air; T = total power loss; power losses of input chokes not included. All power losses obtained using max. supply voltage and switching frequency of 3.6 kHz and Closed-Loop control mode. All power losses are worst case losses.

Heavy duty braking: 3 s 100%, followed by 7 s decreasing to zero

Light duty braking: 5 s 100%

NOTE! The rated currents in given ambient (+50 °C) and coolant (+30°) temperatures are achieved only when the switching frequency is equal to or less than the factory default.

NOTE! Braking power: $P_{brake} = 2*U_{brake}^2 / R_{resistor}$ when 2 resistors are used

NOTE! Max input DC current: $I_{in\_max} = P_{brake\_max} / U_{brake}$

12.6.2 BRAKING POWER AND RESISTANCE, MAINS VOLTAGE 380–500 VAC/600–800 VDC

Table 102. Voltage levels

Voltage	Default +18% DC-link voltage level for braking							
	Vac	380	400	420	440	460	480	500
	Vdc	513	540	567	594	621	648	675
	U_{br} +18%	605	637	669	701	733	765	797

Table 103. Maximum braking power

Chas-sis	NXB unit	Thermal current [Ith]	Max braking power at DC-link voltages [kW]						
			605	637	669	701	733	765	797
Ch3	NXB 0031_5	31	37.5	39.5	41.5	43.5	45.4	47.4	49.4
Ch3	NXB 0061_5	61	73.9	77.7	81.6	85.5	89.4	93.3	97.2
Ch4	NXB 0087_5	87	105.3	110.9	116.4	122.0	127.5	133.0	138.6
Ch4	NXB 0105_5	105	127.1	133.8	140.5	147.2	153.9	160.6	167.3
Ch4	NXB 0140_5	140	169.5	178.4	187.3	196.3	205.2	214.1	223.0
Ch5	NXB 0168_5	168	203.4	214.1	224.8	235.5	246.2	256.9	267.6
Ch5	NXB 0205_5	205	248.2	261.3	274.3	287.4	300.4	313.5	326.6
Ch5	NXB 0261_5	261	316.0	332.6	349.2	365.9	382.5	399.1	415.8
Ch61	NXB 0300_5	300	363.2	382.3	401.4	420.6	439.7	458.8	477.9
Ch61	NXB 0385_5	385	466.1	490.6	515.2	539.7	564.2	588.8	613.3
Ch62	NXB 0460_5	460	556.9	586.2	615.5	644.8	674.2	703.5	732.8
Ch62	NXB 0520_5	520	629.6	662.7	695.8	729.0	762.1	795.2	828.4
Ch62	NXB 0590_5	590	714.3	751.9	789.5	827.1	864.7	902.3	939.9
Ch62	NXB 0650_5	650	786.9	828.4	869.8	911.2	952.6	994.0	1035.5
Ch62	NXB 0730_5	730	883.8	930.3	976.8	1023.3	1069.9	1116.4	1162.9

NOTE! The braking powers indicated in Table 103 can only be achieved with minimum resistance.

Table 104. Minimum resistance

Chassis	NXB unit	Thermal current [Ith]	Minimum resistance at DC-link voltages [ohm]						
			605	637	669	701	733	765	797
Ch3	NXB 0031_5	31	19.5	20.6	21.6	22.6	23.6	24.7	25.7
Ch3	NXB 0061_5	61	9.9	10.4	11.0	11.5	12.0	12.5	13.1
Ch4	NXB 0087_5	87	7.0	7.3	7.7	8.1	8.4	8.8	9.2
Ch4	NXB 0105_5	105	5.8	6.1	6.4	6.7	7.0	7.3	7.6
Ch4	NXB 0140_5	140	4.3	4.6	4.8	5.0	5.2	5.5	5.7
Ch5	NXB 0168_5	168	3.6	3.8	4.0	4.2	4.4	4.6	4.7
Ch5	NXB 0205_5	205	3.0	3.1	3.3	3.4	3.6	3.7	3.9

Table 104. Minimum resistance

Chassis	NXB unit	Thermal current [Ith]	Minimum resistance at DC-link voltages [ohm]						
			605	637	669	701	733	765	797
Ch5	NXB 0261_5	261	2.3	2.4	2.6	2.7	2.8	2.9	3.1
Ch61	NXB 0300_5	300	2.0	2.1	2.2	2.3	2.4	2.5	2.7
Ch61	NXB 0385_5	385	1.6	1.7	1.7	1.8	1.9	2.0	2.1
Ch62	NXB 0460_5	460	1.3	1.4	1.5	1.5	1.6	1.7	1.7
Ch62	NXB 0520_5	520	1.2	1.2	1.3	1.3	1.4	1.5	1.5
Ch62	NXB 0590_5	590	1.0	1.1	1.1	1.2	1.2	1.3	1.4
Ch62	NXB 0650_5	650	0.9	1.0	1.0	1.1	1.1	1.2	1.2
Ch62	NXB 0730_5	730	0.8	0.9	0.9	1.0	1.0	1.0	1.1

Table 105. Maximum resistance

Chassis	NXBunit	Thermal current [Ith]	Maximum resistance at DC-link voltages [ohm]						
			605	637	669	701	733	765	797
Ch3	NXB 0031_5	31	97.6	102.8	107.9	113.1	118.2	123.3	128.5
Ch3	NXB 0061_5	61	49.6	52.2	54.8	57.5	60.1	62.7	65.3
Ch4	NXB 0087_5	87	34.8	36.6	38.5	40.3	42.1	43.9	45.8
Ch4	NXB 0105_5	105	28.8	30.3	31.9	33.4	34.9	36.4	37.9
Ch4	NXB 0140_5	140	21.6	22.8	23.9	25.0	26.2	27.3	28.4
Ch5	NXB 0168_5	168	18.0	19.0	19.9	20.9	21.8	22.8	23.7
Ch5	NXB 0205_5	205	14.8	15.5	16.3	17.1	17.9	18.6	19.4
Ch5	NXB 0261_5	261	11.6	12.2	12.8	13.4	14.0	14.6	15.3
Ch61	NXB 0300_5	300	10.1	10.6	11.2	11.7	12.2	12.7	13.3
Ch61	NXB 0385_5	385	7.9	8.3	8.7	9.1	9.5	9.9	10.3
Ch62	NXB 0460_5	460	6.6	6.9	7.3	7.6	8.0	8.3	8.7
Ch62	NXB 0520_5	520	5.8	6.1	6.4	6.7	7.0	7.4	7.7
Ch62	NXB 0590_5	590	5.1	5.4	5.7	5.9	6.2	6.5	6.8
Ch62	NXB 0650_5	650	4.7	4.9	5.1	5.4	5.6	5.9	6.1
Ch62	NXB 0730_5	730	4.1	4.4	4.6	4.8	5.0	5.2	5.5

12.6.3 BRAKING POWER AND RESISTANCE, MAINS VOLTAGE 525–690 VAC/ 840–1100 VDC

Table 106. Voltage levels

Voltage	Default +18% DC-link voltage level for braking							
	Vac	525	550	575	600	630	660	690
	Vdc	708.8	742.5	776.3	810	850.5	891	931.5
	U_{br} +18%	836	876	916	956	1004	1051	1099

Table 107. Maximum braking power

Chassis	NXB unit	Thermal current [Ith]	Max braking power at DC-link voltages [kW]							
			836	876	916	956	1004	1051	1099	1136 *
Ch61	NXB 0170_6	170	284.4	297.9	311.4	325.0	341.2	357.5	373.7	386.2
Ch61	NXB 0208_6	208	347.9	364.5	381.0	397.6	417.5	437.4	457.3	472.6
Ch62	NXB 0261_6	261	436.6	457.4	478.1	498.9	523.9	548.8	573.8	593.0
Ch62	NXB 0325_6	325	543.6	569.5	595.4	621.3	652.3	683.4	714.5	738.4
Ch62	NXB 0385_6	385	644.0	674.6	705.3	736.0	772.8	809.6	846.4	874.7
Ch62	NXB 0416_6	416	695.8	729.0	762.1	795.2	835.0	874.7	914.5	945.2
Ch62	NXB 0460_6	460	769.4	806.1	842.7	879.3	923.3	967.3	1011.2	1045.1
Ch62	NXB 0502_6	502	839.7	879.7	919.6	959.6	1007.6	1055.6	1103.6	1140.5

NOTE! The braking powers indicated in Table 107 can only be achieved with minimum resistance.

Table 108. Minimum resistance

Chassis	NXB unit	Thermal current [Ith]	Minimum resistance at DC-link voltages [ohm]							
			836	876	916	956	1004	1051	1099	1136 *
Ch61	NXB 0170_6	170	4.9	5.2	5.4	5.6	5.9	6.2	6.5	6.7
Ch61	NXB 0208_6	208	4.0	4.2	4.4	4.6	4.8	5.1	5.3	5.5
Ch62	NXB 0261_6	261	3.2	3.4	3.5	3.7	3.8	4.0	4.2	4.4
Ch62	NXB 0325_6	325	2.6	2.7	2.8	2.9	3.1	3.2	3.4	3.5
Ch62	NXB 0385_6	385	2.2	2.3	2.4	2.5	2.6	2.7	2.9	3.0
Ch62	NXB 0416_6	416	2.0	2.1	2.2	2.3	2.4	2.5	2.6	2.7
Ch62	NXB 0460_6	460	1.8	1.9	2.0	2.1	2.2	2.3	2.4	2.5
Ch62	NXB 0502_6	502	1.7	1.7	1.8	1.9	2.0	2.1	2.2	2.3

Local contacts: http://drives.danfoss.com/danfoss-drives/local-contacts/

Table 109. Maximum resistance

Chassis	NXB unit	Thermal current [Ith]	Maximum resistance at DC-link voltages [ohm]							
			836	876	916	956	1004	1051	1099	1136 *
Ch61	NXB 0170_6	170	24.6	25.8	26.9	28.1	29.5	30.9	32.3	33.4
Ch61	NXB 0208_6	208	20.1	21.1	22.0	23.0	24.1	25.3	26.4	27.3
Ch62	NXB 0261_6	261	16.0	16.8	17.5	18.3	19.2	20.1	21.1	21.8
Ch62	NXB 0325_6	325	12.9	13.5	14.1	14.7	15.4	16.2	16.9	17.5
Ch62	NXB 0385_6	385	10.9	11.4	11.9	12.4	13.0	13.7	14.3	14.8
Ch62	NXB 0416_6	416	10.1	10.5	11.0	11.5	12.1	12.6	13.2	13.7
Ch62	NXB 0460_6	460	9.1	9.5	10.0	10.4	10.9	11.4	11.9	12.3
Ch62	NXB 0502_6	502	8.3	8.7	9.1	9.5	10.0	10.5	10.9	11.3

*. Only valid for NX_8 brake chopper units.

12.7 BRAKE CHOPPER UNIT – FUSE SELECTION

Table 110. BCU fuse selection, mains voltage 465–800 Vdc

Chassis	Type	Min res. value, 2* [ohm]	Brk current	Fuse size*	DIN43620		"TTF" threaded end "7X" or size 83 with end contacts		"TTQF" threaded end size84 or "PLAF" 2x84 with end contacts	
					aR fuse part nr.	Qty. of fuses /dr	aR fuse part nr.	Qty. of fuses/ dr	aR fuse part nr.	Qty. of fuses/ dr
CH3	0016	52.55	32	DIN0	PC70UD13C80PA	2	PC70UD13C63TF	2	-	-
CH3	0022	38.22	44	DIN0	PC70UD13C80PA	2	PC70UD13C80TF	2	-	-
CH3	0031	27.12	62	DIN0	PC70UD13C125PA	2	PC70UD13C125TF	2	-	-
CH3	0038	22.13	76	DIN0	PC70UD13C125PA	2	PC70UD13C125TF	2	-	-
CH3	0045	18.68	90	DIN0	PC70UD13C200PA	2	PC70UD13C200TF	2	-	-
CH3	0061	13.78	122	DIN0	PC70UD13C200PA	2	PC70UD13C200TF	2	-	-
CH4	0072	11.68	144	1	PC71UD13C315PA	2	PC71UD13C315TF	2	-	-
CH4	0087	9.66	174	1	PC71UD13C315PA	2	PC71UD13C315TF	2	-	-
CH4	0105	8.01	210	1	PC71UD13C400PA	2	PC71UD13C400TF	2	-	-
CH4	0140	6.01	280	3	PC73UD13C500PA	2	PC73UD13C500TF	2	-	-
CH5	0168	5.00	336	3	PC73UD13C630PA	2	PC73UD13C630TF	2	-	-
CH5	0205	4.10	410	3	PC73UD11C800PA	2	PC73UD13C800TF	2	-	-
CH5	0261	3.22	522	3	PC73UD90V11CPA	2	PC73UD95V11CTF	2	-	-
CH61	0300	2.80	600	3	PC73UD90V11CPA	2	PC73UD95V11CTF	2	-	-
CH61	0385	2.18	770	3	PC73UD11C800PA	4	PC83UD11C13CTF	2	-	-
CH62	0460	1.83	920	3	PC73UD11C800PA	4	PC73UD13C800TF	4	PC84UD13C15CTQ	2
CH62	0520	1.62	1040	3	PC73UD90V11CPA	4	PC73UD95V11CTF	4	PC84UD12C18CTQ	2
CH62	0590	1.43	1180	3	PC73UD90V11CPA	4	PC73UD95V11CTF	4	PC84UD11C20CTQ	2
CH62	0650	1.29	1300	3	PC73UD90V11CPA	4	PC73UD95V11CTF	4	PC84UD11C22CTQ	2
CH62	0730	1.15	1460		-		PC83UD11C13CTF	4	PC84UD11C24CTQ	2

Table 111. BCU fuse selection, mains voltage 640–1100 Vdc

Chassis	Type	Min res. value, 2* [ohm]	Brk current	Fuse size*	DIN43620		"TTF" threaded end "7X" or size 83 with end contacts		"TTQF" threaded end size84 or "PLAF" 2x84 with end contacts	
					aR fuse part nr.	Qty. of fuses /dr	aR fuse part nr.	Qty. of fuses/ dr	aR fuse part nr.	Qty. of fuses/ dr
CH61	0170	6.51	340	DIN3	PC73UD13C630PA	2	PC73UD13C630TF	2	-	-
CH61	0208	5.32	416	DIN3	PC73UD11C800PA	2	PC73UD13C800TF	2	-	-
CH61	0261	4.24	522	DIN3	PC73UD11C800PA	2	PC73UD13C800TF	2	-	-
CH62	0310	3.41	650	DIN3	PC73UD13C630PA	4	PC83UD12C11CTF	2	-	-
CH62	0385	2.88	770	DIN3	PC73UD13C630PA	4	PC83UD11C13CTF	2	-	-
CH62	0416	2.66	832	DIN3	PC73UD11C800PA	4	PC83UD11C14CTF	2	PC84UD13C15CTQ	2
CH62	0460	2.41	920	DIN3	PC73UD11C800PA	4	PC73UD13C800TF	4	PC84UD13C15CTQ	2
CH62	0502	2.21	1004	DIN3	PC73UD11C800PA	4	PC73UD13C800TF	4	PC84UD13C15CTQ	2

13. APPENDICES

Appendix 1

VACON® NX Liquid-Cooled AC drive and inverter main circuit and control diagrams

CH3, FC

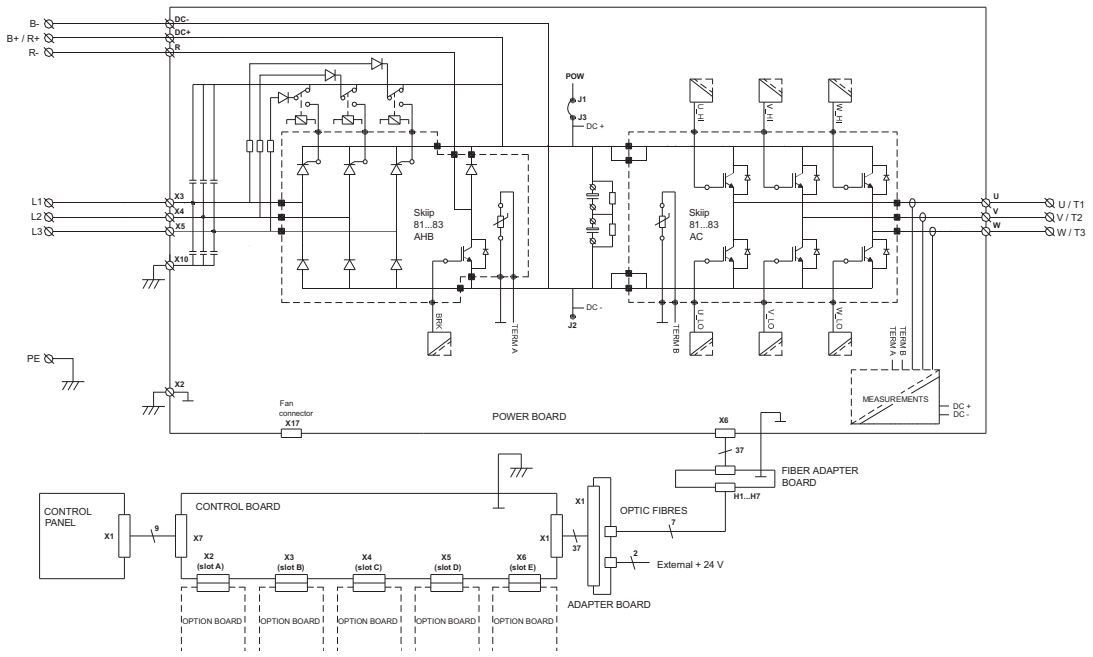

11405_uk

CH4, FC

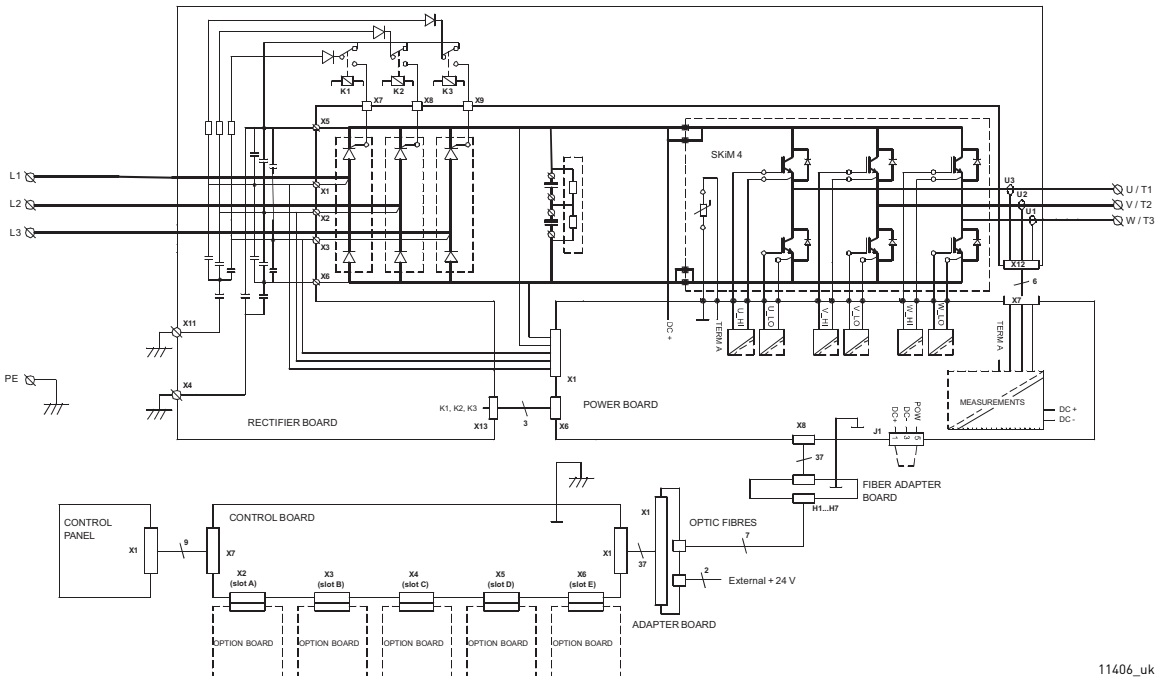

11406_uk

Local contacts: http://drives.danfoss.com/danfoss-drives/local-contacts/

CH5, FC

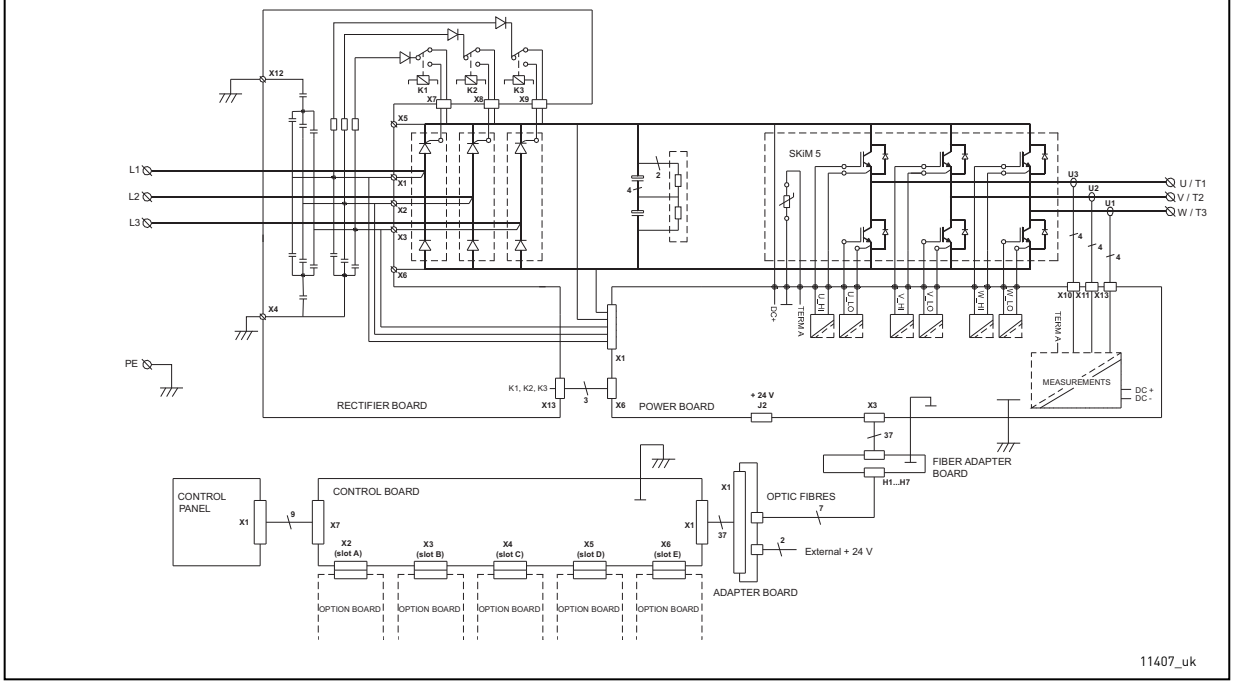
L1
L2
L3
PE
X12
K1
K2
K3
X7
X8
X9
X5
X1
X2
X3
X6
X4
SKiM 5
U3
U2
U1
U / T1
V / T2
W / T3
X10
X11
X13
TERM A
MEASUREMENTS
DC +
DC -
RECTIFIER BOARD
K1, K2, K3
POWER BOARD
+ 24 V
J2
FIBER ADAPTER BOARD
H1...H7
CONTROL PANEL
CONTROL BOARD
OPTIC FIBRES
External + 24 V
ADAPTER BOARD
X2 (slot A)
X3 (slot B)
X4 (slot C)
X5 (slot D)
X6 (slot E)
OPTION BOARD
11407_uk

L/C NFE

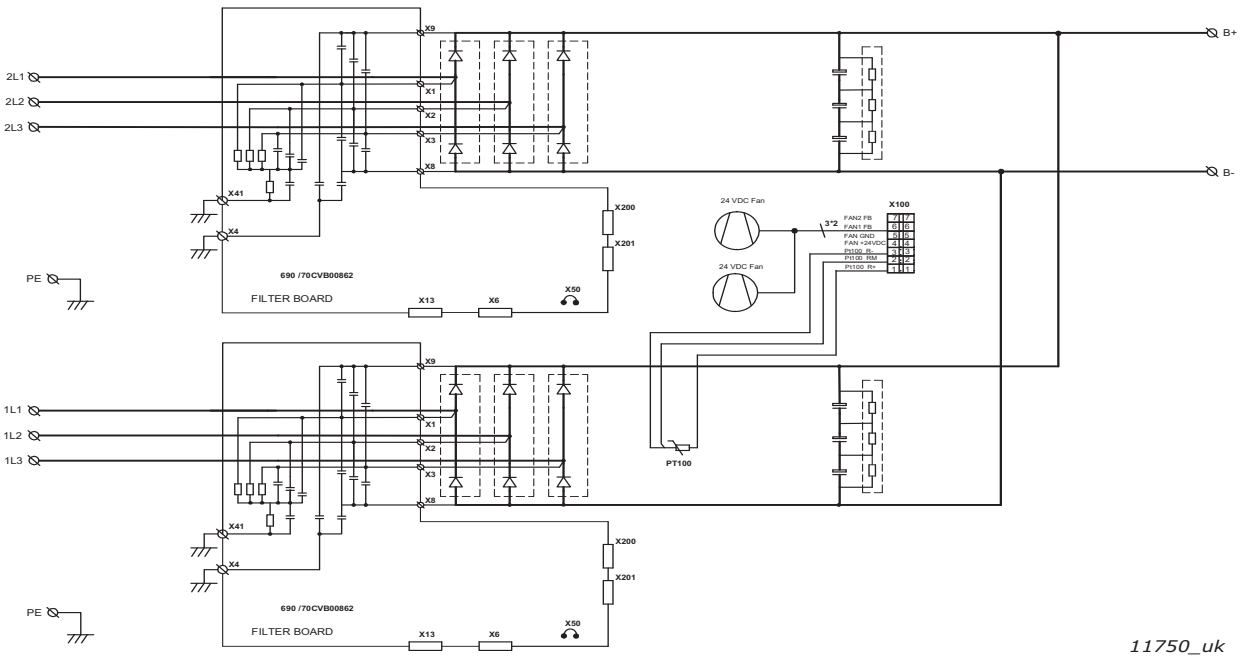
2L1
2L2
2L3
1L1
1L2
1L3
PE
B+
B-
X9
X1
X2
X3
X8
X41
X4
X200
X201
690 /70CVB00862
FILTER BOARD
X13
X6
X50
24 VDC Fan
X100
FAN2 FB
FAN1 FB
FAN GND
FAN +24VDC
PT100 -R-
PT100 RM
PT100 R+
PT100
11750_uk

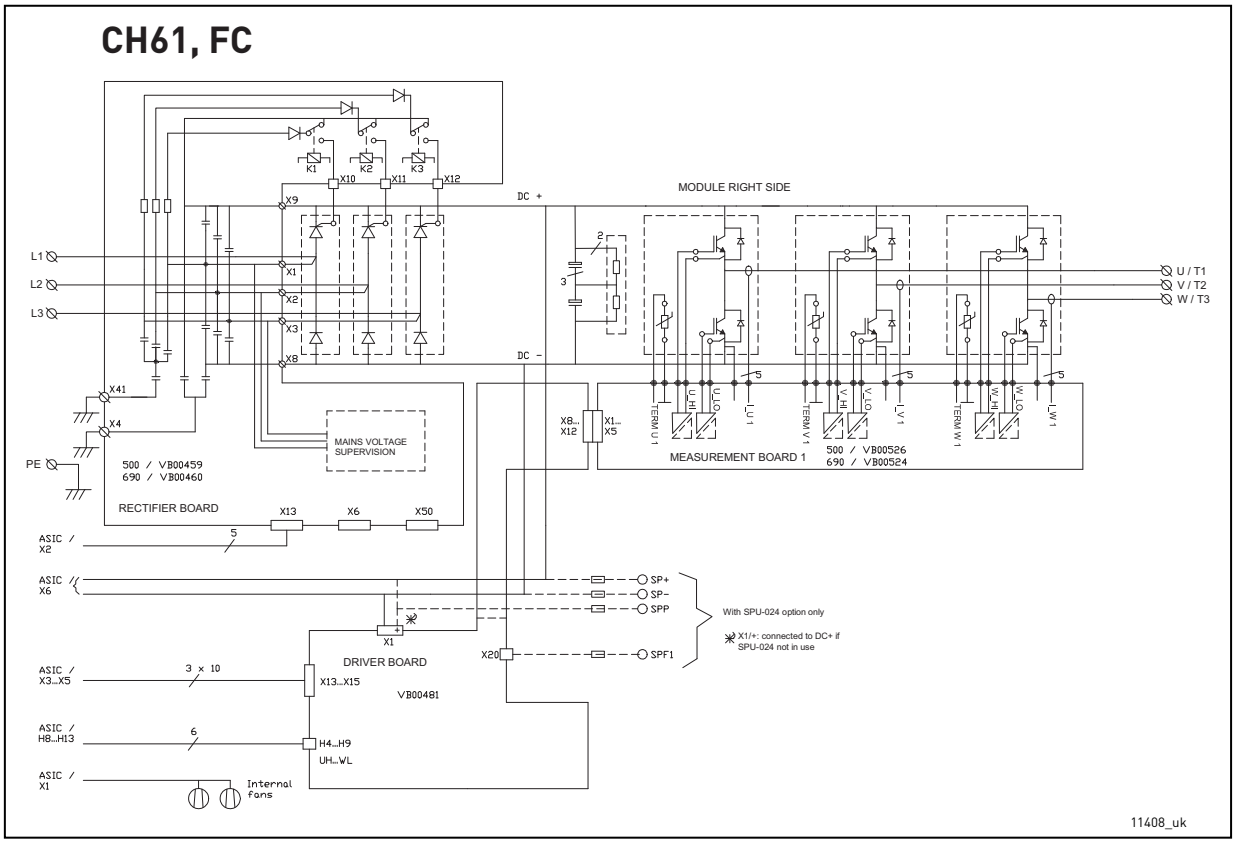

Local contacts: http://drives.danfoss.com/danfoss-drives/local-contacts/

CH61, FC, CONTROL

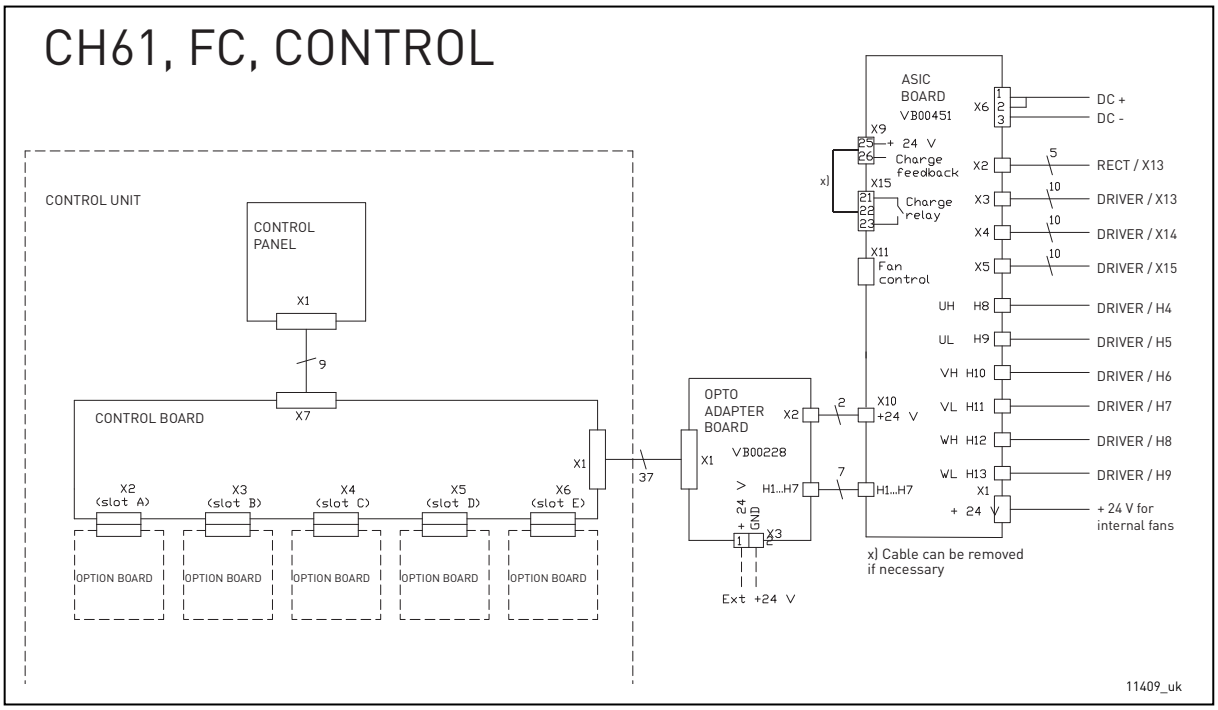

CH61, INVERTER

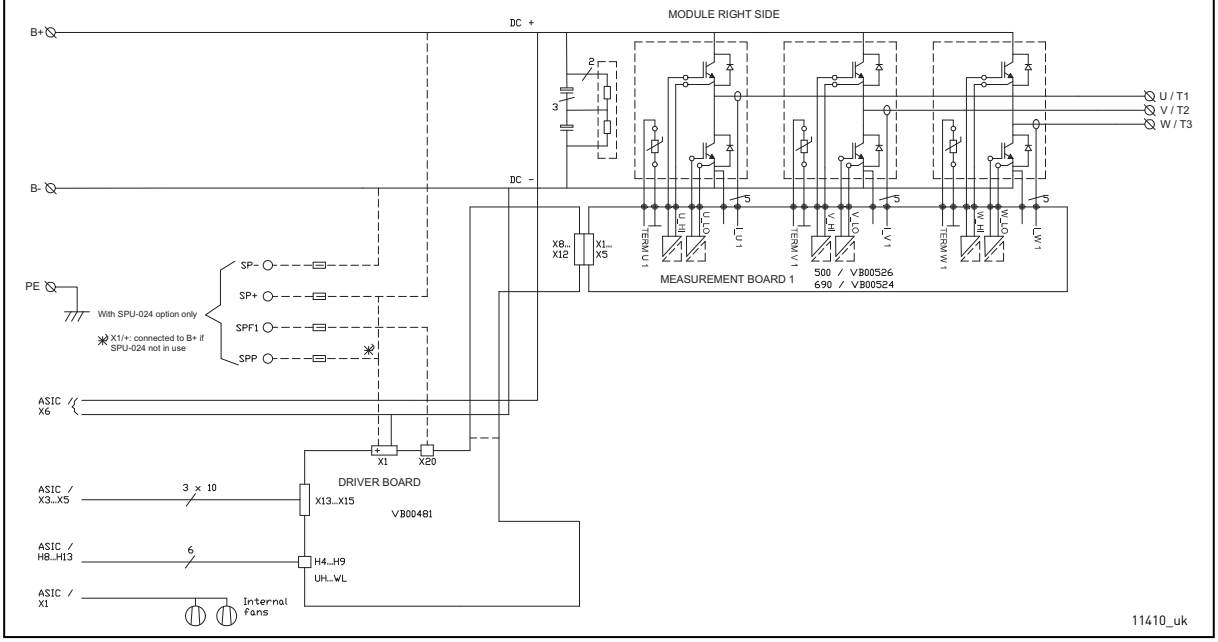

CH61, INVERTER, CONTROL

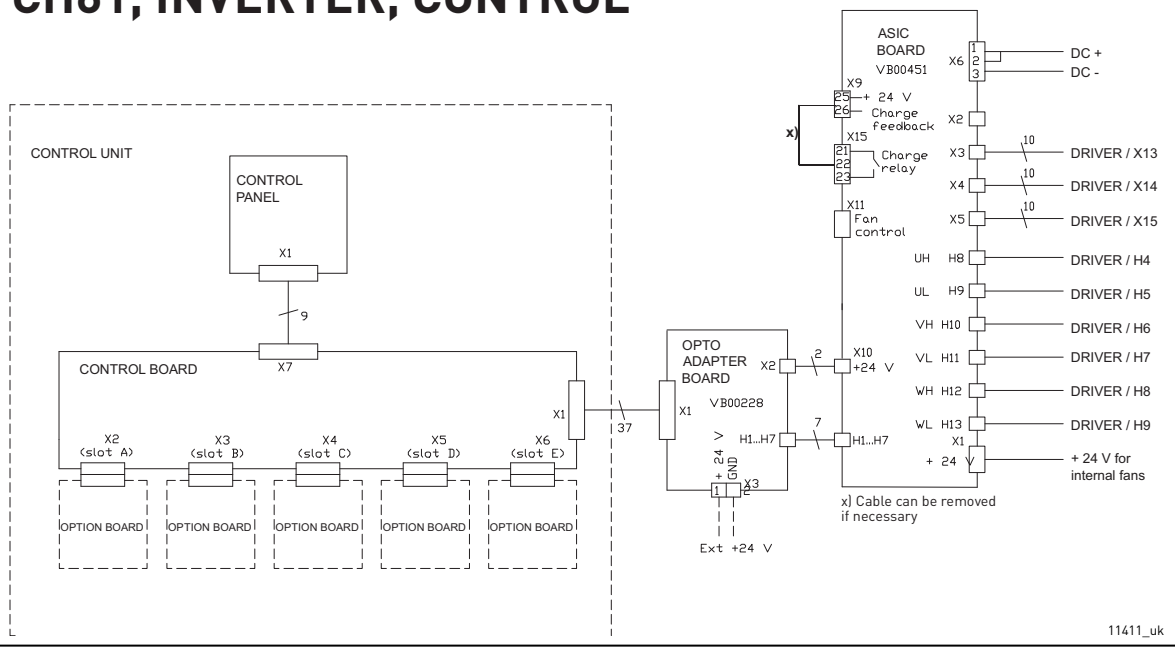

CH62, INVERTER

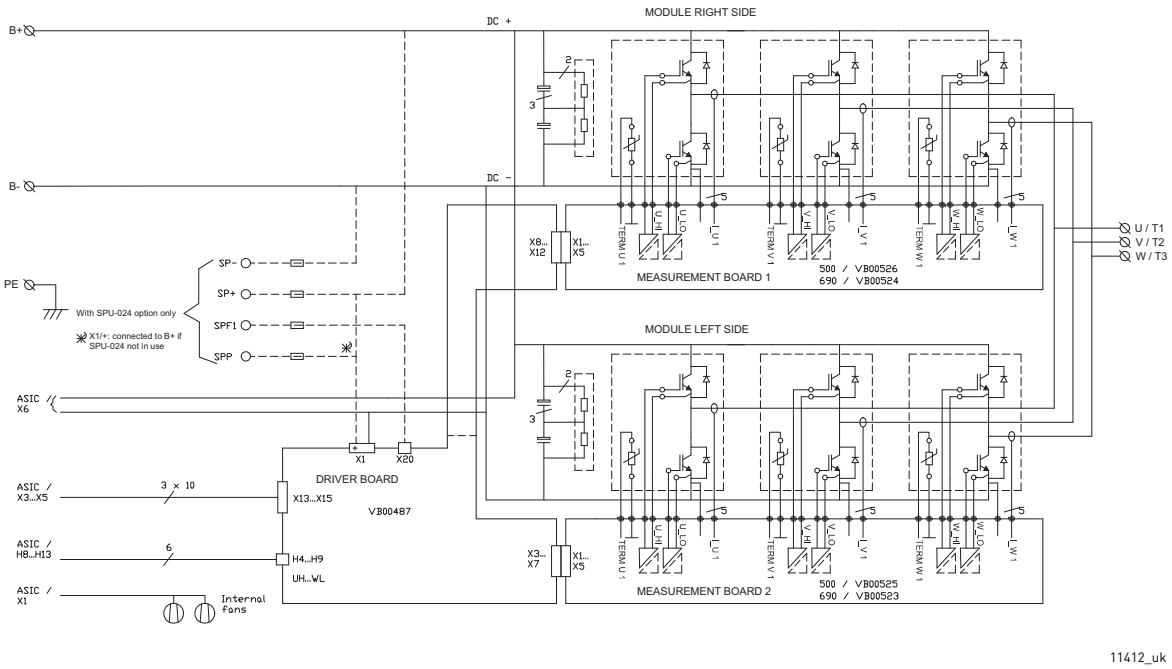

CH62, INVERTER, CONTROL

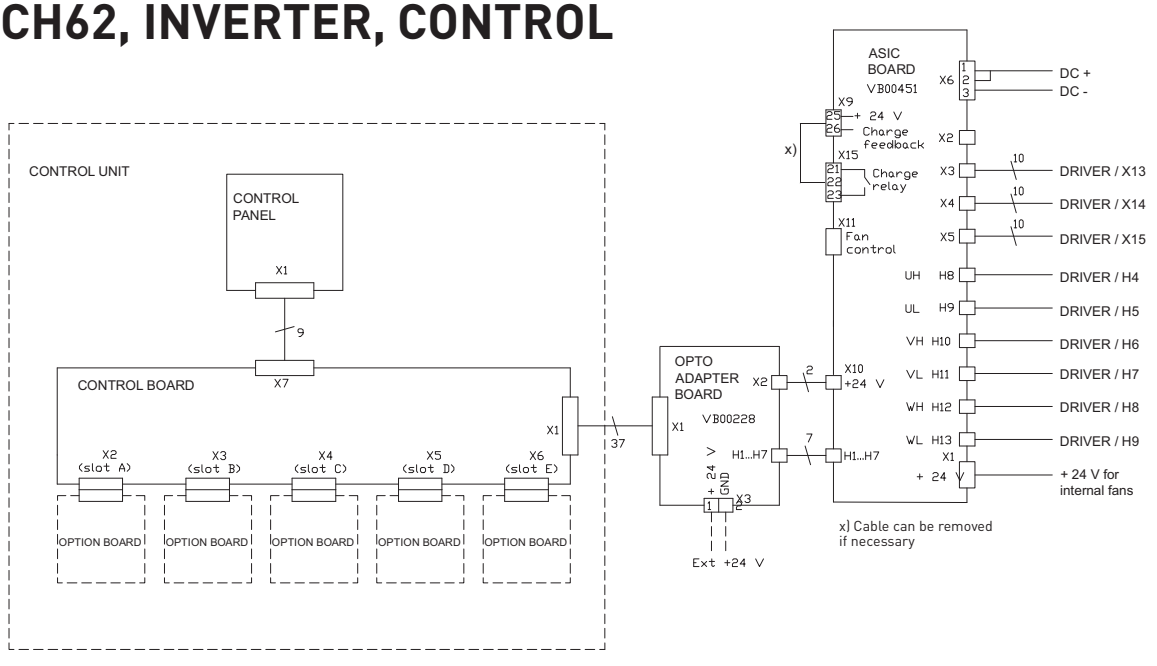

CH63, FC, MODULE 1

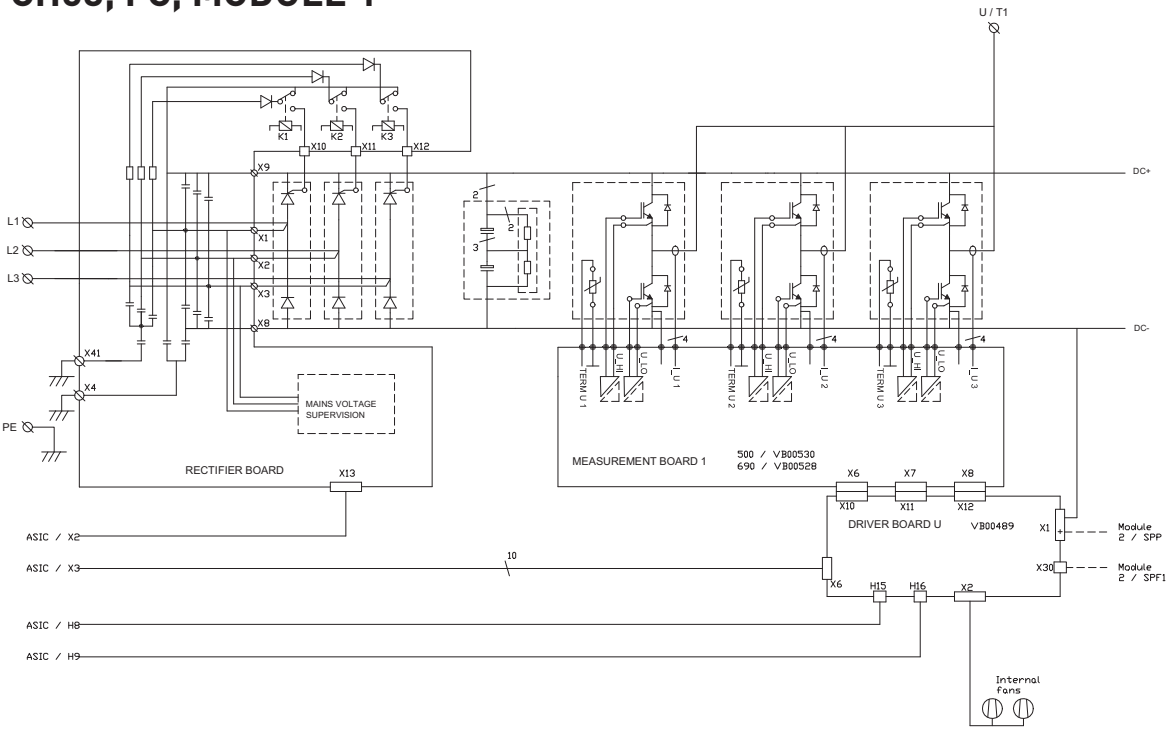

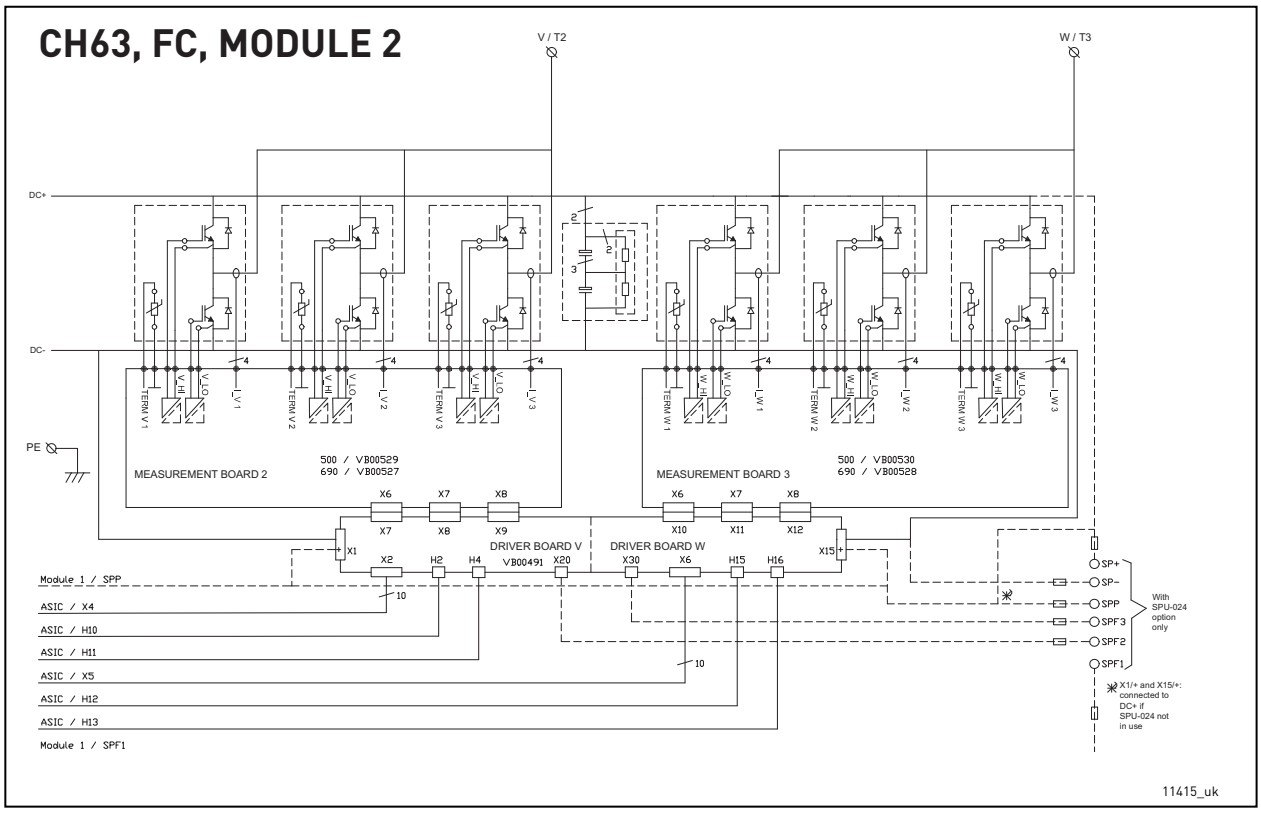

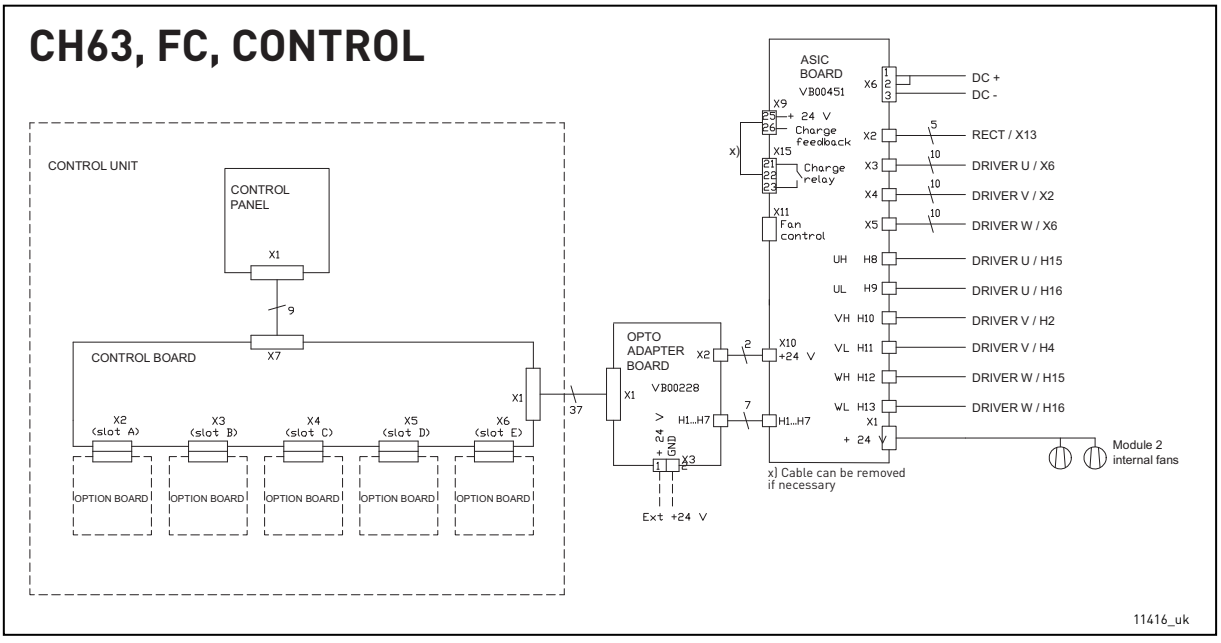

Local contacts: http://drives.danfoss.com/danfoss-drives/local-contacts/

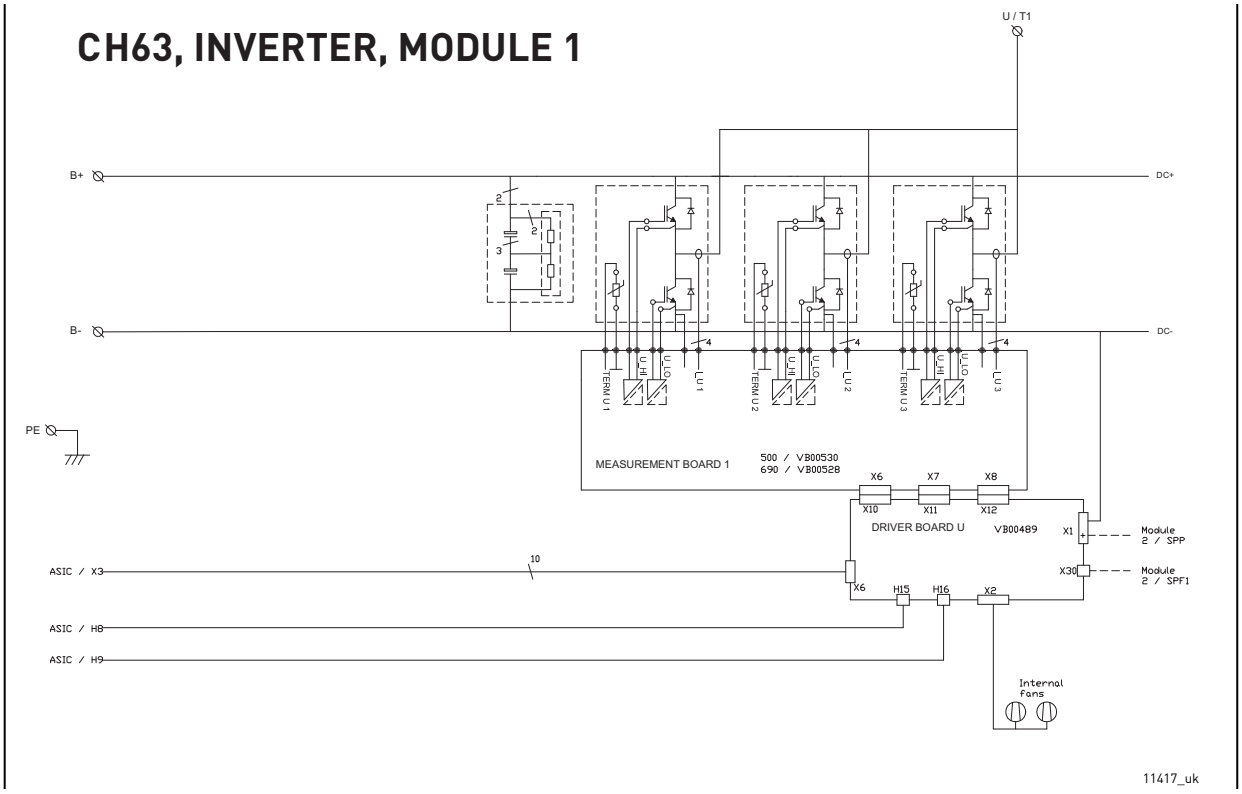
CH63, INVERTER, MODULE 1
U / T1
B+
DC+
B-
DC-
PE
TERM U 1
TERM U 2
TERM U 3
MEASUREMENT BOARD 1
500 / VB00530
690 / VB00528
X6
X7
X8
X10
X11
X12
DRIVER BOARD U
VB00489
X1
Module 2 / SPP
X30
Module 2 / SPF1
ASIC / X3
ASIC / H8
ASIC / H9
H15
H16
X2
Internal fans
11417_uk

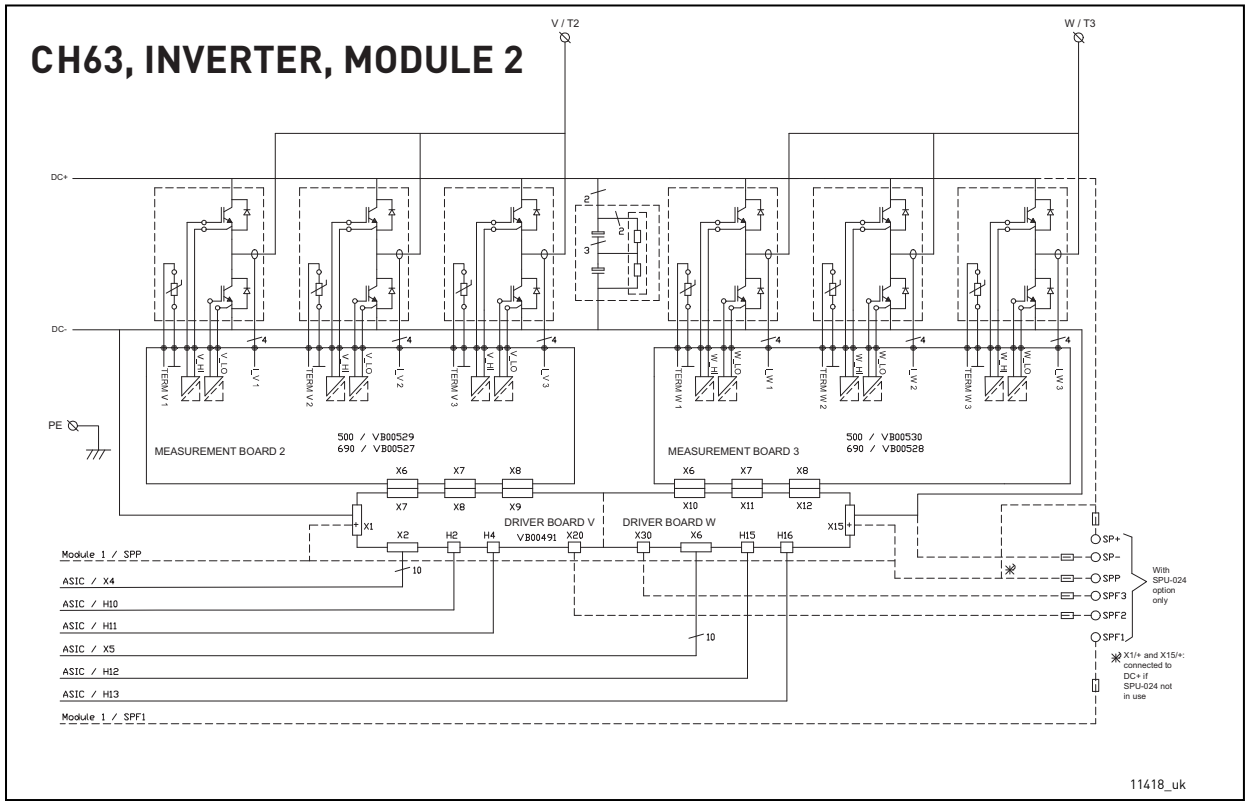
CH63, INVERTER, MODULE 2
V / T2
W / T3
DC+
DC-
PE
TERM V 1
TERM V 2
TERM V 3
TERM W 1
TERM W 2
TERM W 3
MEASUREMENT BOARD 2
500 / VB00529
690 / VB00527
MEASUREMENT BOARD 3
500 / VB00530
690 / VB00528
DRIVER BOARD V
VB00491
DRIVER BOARD W
Module 1 / SPP
ASIC / X4
ASIC / H10
ASIC / H11
ASIC / X5
ASIC / H12
ASIC / H13
Module 1 / SPF1
SP+
SP-
SPP
SPF3
SPF2
SPF1
With SPU-024 option only
X1/+ and X15/+: connected to DC+ if SPU-024 not in use
11418_uk

CH63, INVERTER, CONTROL

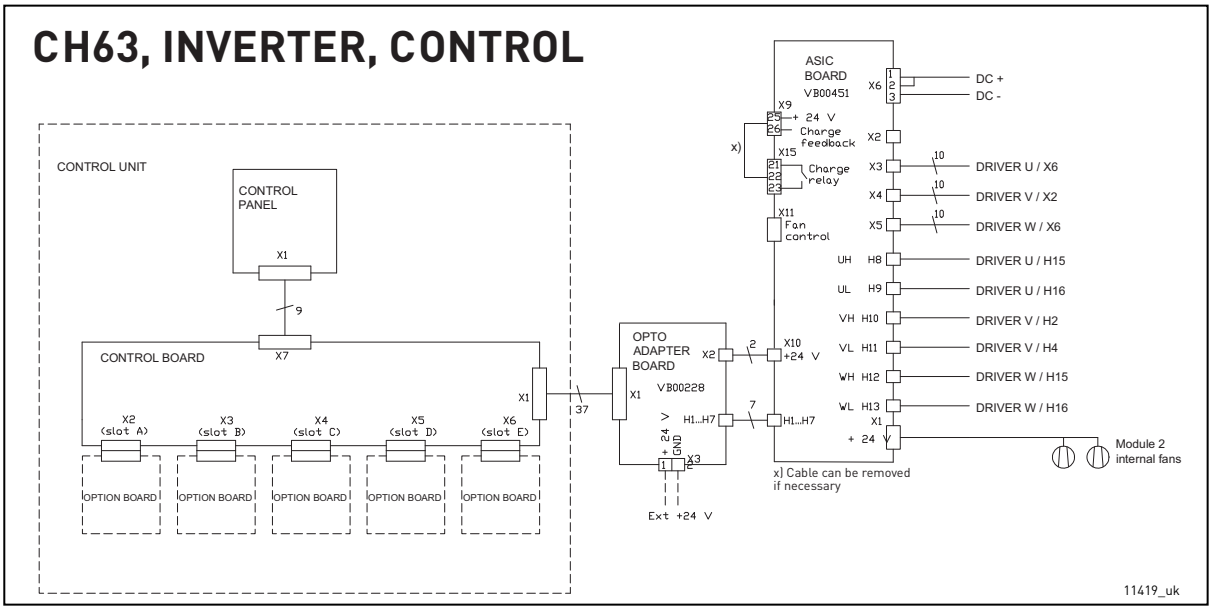

CH64, INVERTER, PHASE U

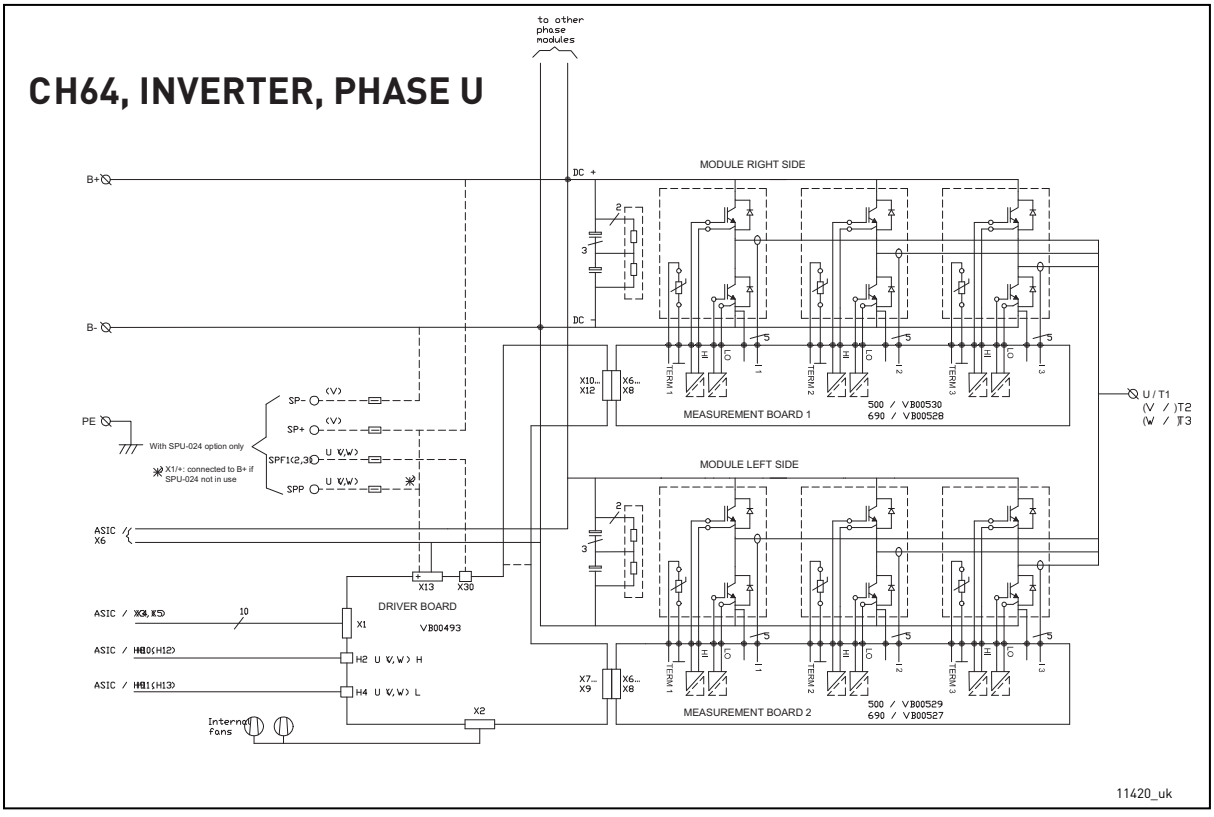

Local contacts: http://drives.danfoss.com/danfoss-drives/local-contacts/

CH64, INVERTER, CONTROL

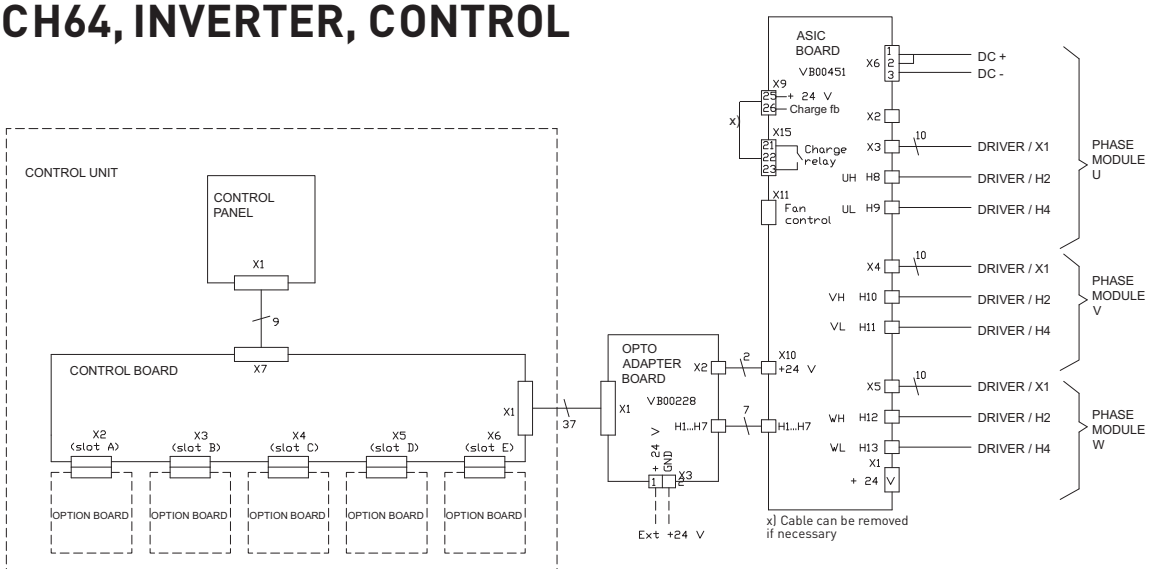

CH72, FC

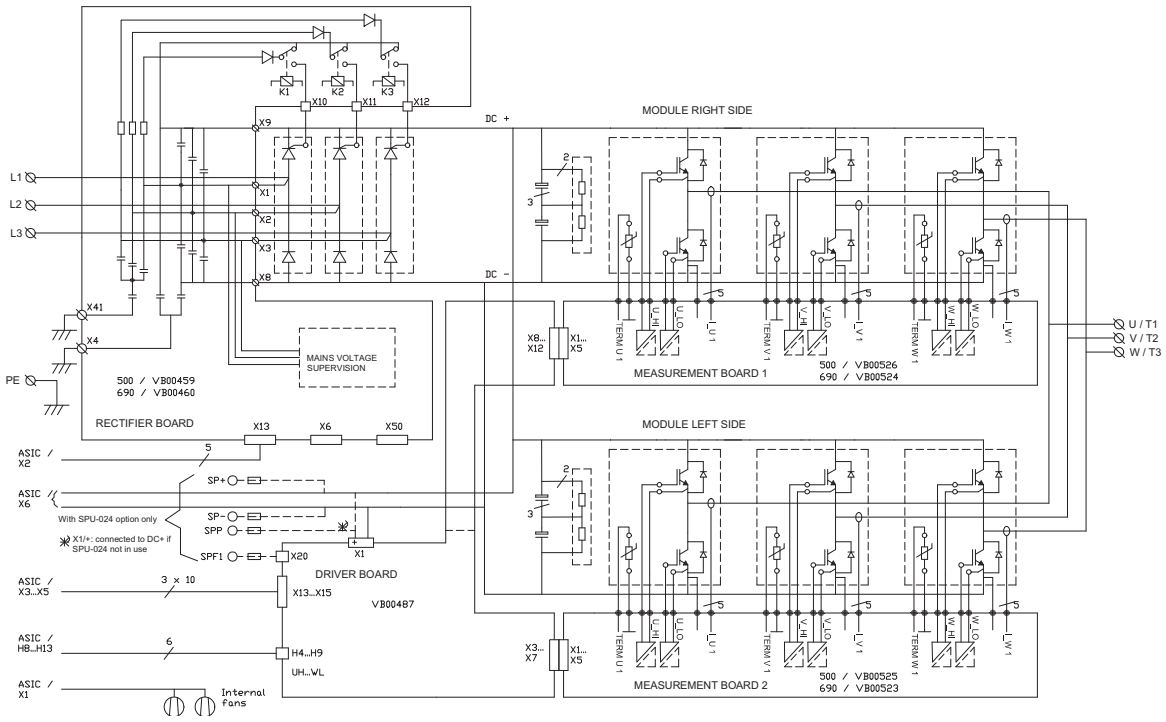

CH72, FC, CONTROL

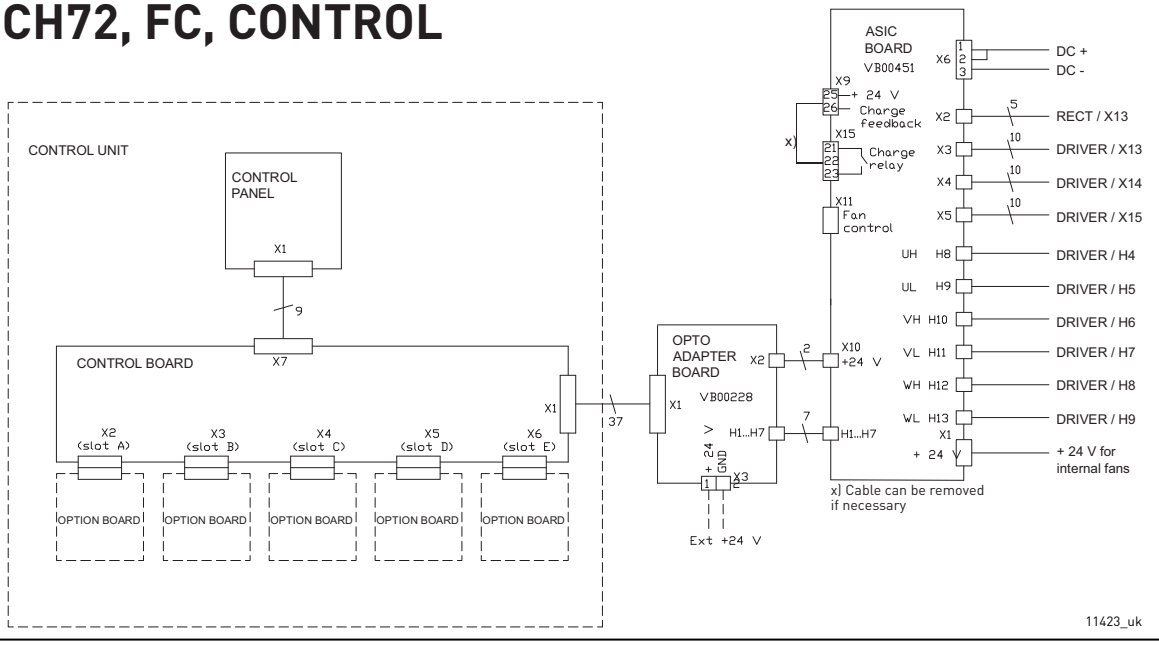

CH74, FC, PHASE U

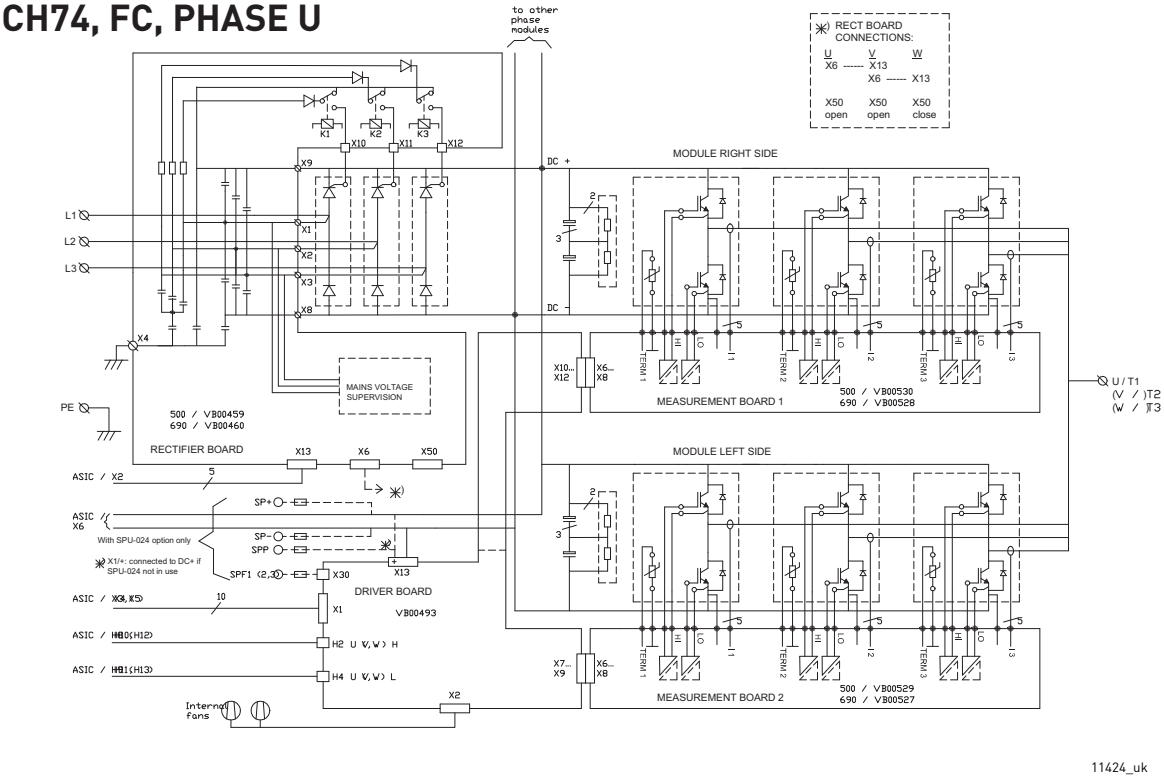

Local contacts: http://drives.danfoss.com/danfoss-drives/local-contacts/

CH74, FC, CONTROL

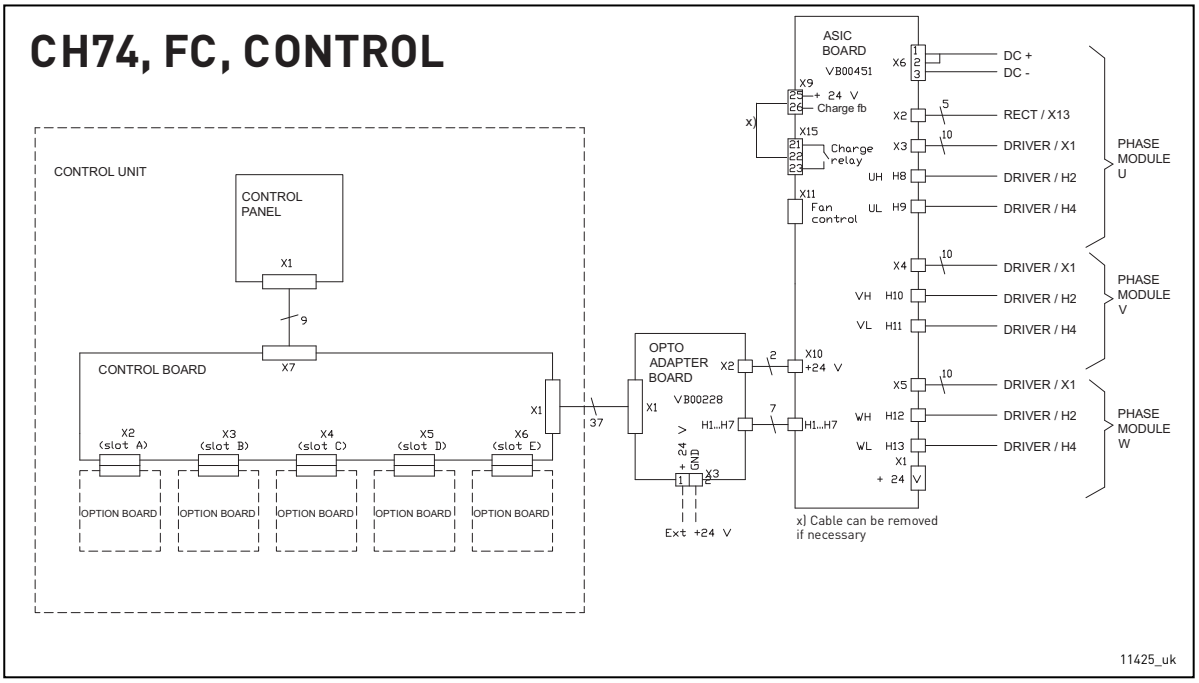

Appendix 2

OETL2500 + OFAX3 + Charging circuit for VACON® NX Liquid-Cooled inverters 1640_5 to 2300_5 (3 diagrams)

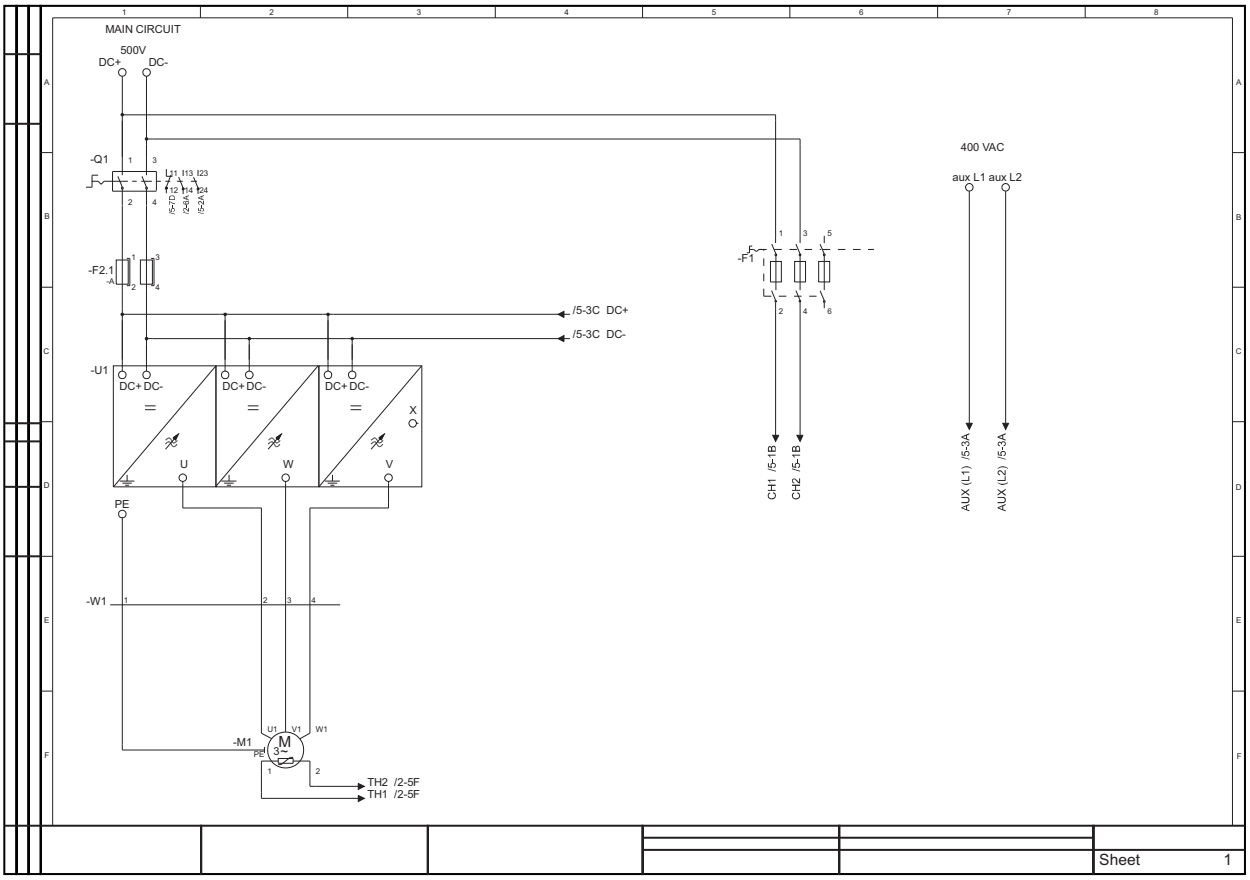

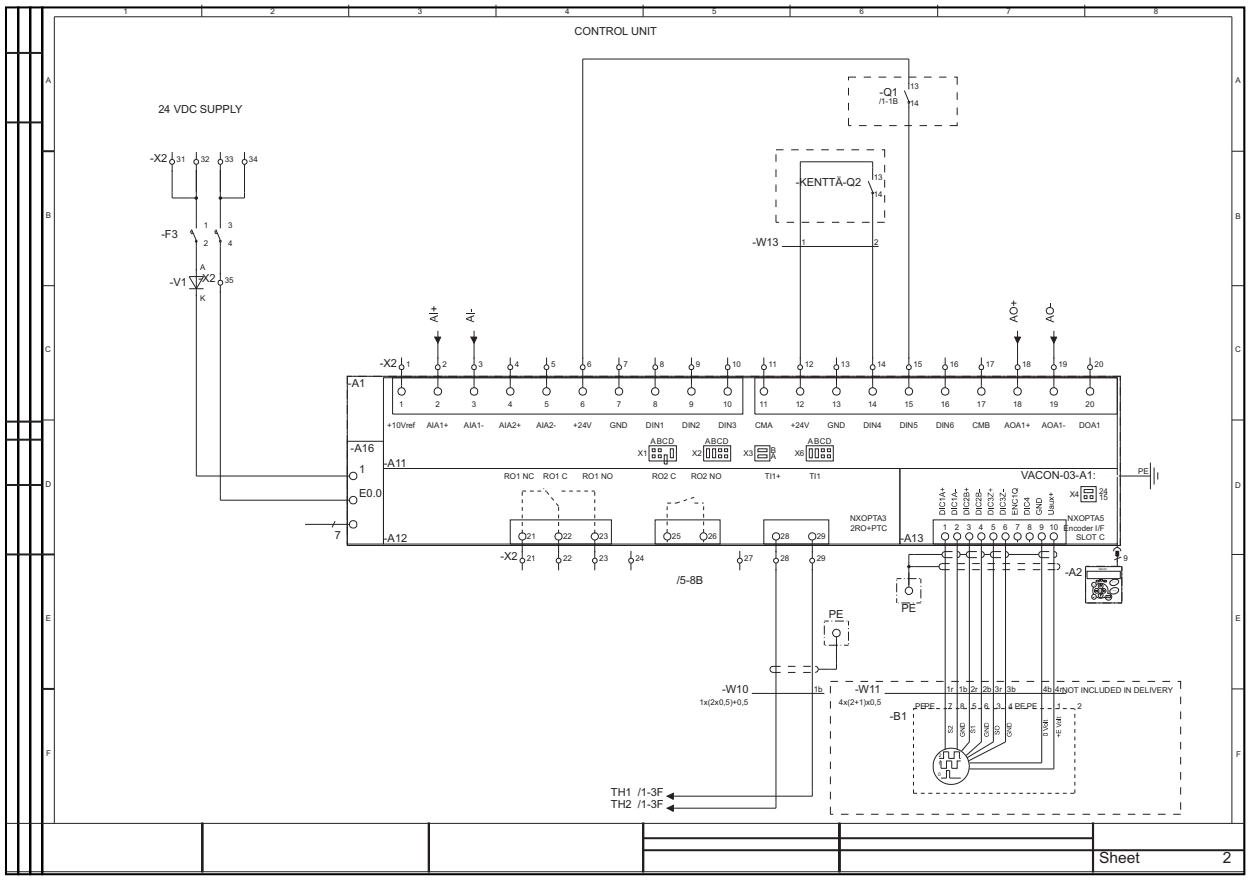
CONTROL UNIT
24 VDC SUPPLY
-Q1
/1-1B
-KENTTÄ-Q2
-W13
-F3
-V1
-X2
AI+
AI-
AO+
AO-
-A1
-A16
-A11
-A12
-A13
-A2
+10Vref AIA1+ AIA1- AIA2+ AIA2- +24V GND DIN1 DIN2 DIN3 CMA +24V GND DIN4 DIN5 DIN6 CMB AOA1+ AOA1- DOA1
RO1 NC RO1 C RO1 NO RO2 C RO2 NO TI1+ TI1
NXOPTA3
2RO+PTC
VACON-03-A1:
NXOPTA5
Encoder I/F
SLOT C
/5-8B
PE
-W10
1x(2x0,5)+0,5
-W11
4x(2+1)x0,5
NOT INCLUDED IN DELIVERY
-B1
TH1 /1-3F
TH2 /1-3F
Sheet 2

11427 00

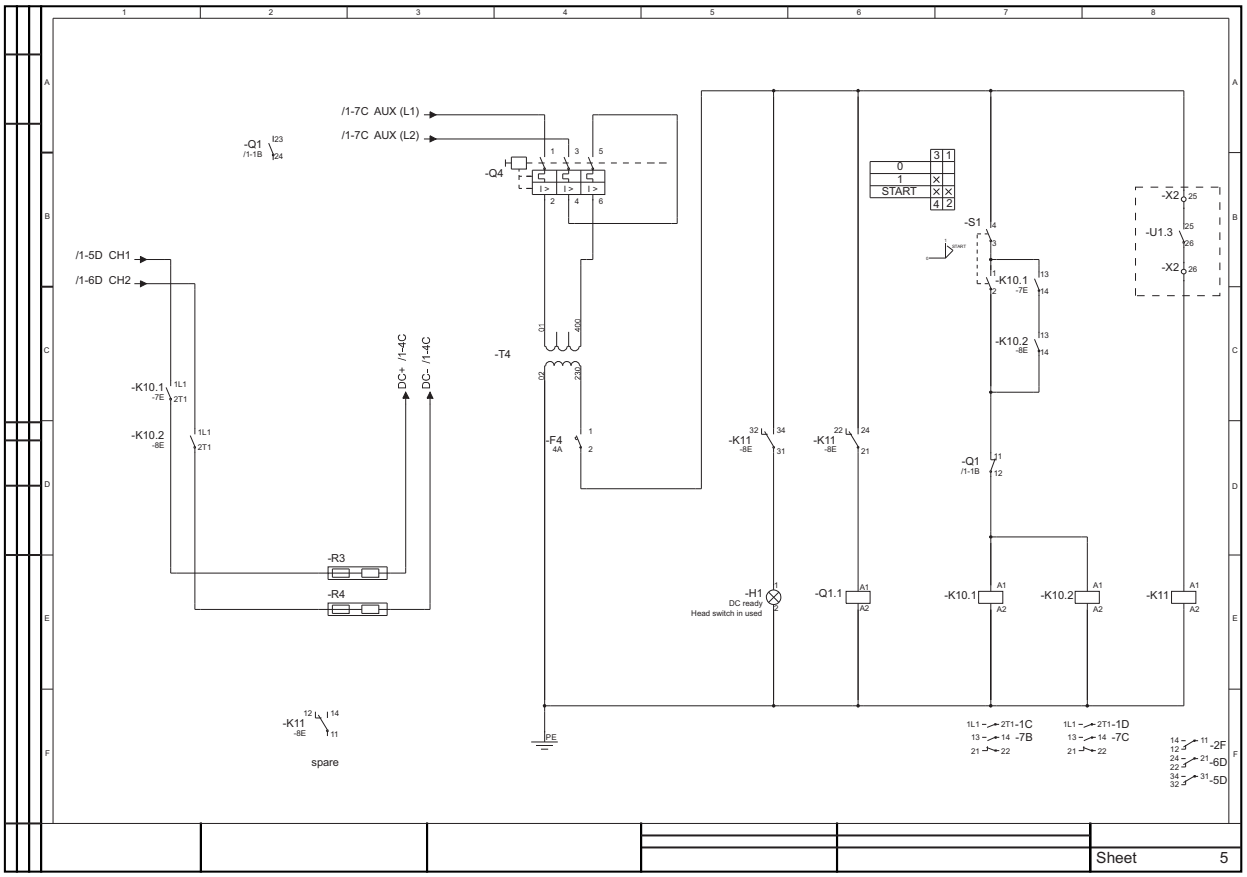

Local contacts: http://drives.danfoss.com/danfoss-drives/local-contacts/

Appendix 3

Fuse sizes, Bussman aR fuses

Fuse information

Max fuse ambient temperature +50 ºC.

Fuse sizes can differ in the same chassis. Make sure that the Isc of the supply transformer is high enough to burn fuses fast enough.

Check the current rating of the fuse bases according to the input current of the drive.

The physical size of the fuse is chosen on the basis of the fuse current: Current < 400 amps (size 2 fuse or smaller), current < 400 amps (size 3 fuse).

Table 112. Fuse sizes (Bussman aR) for VACON® NX Liquid-Cooled (500 V) AC drives

Chassis	Type	Ith [A]	DIN43620		DIN43653 (80mm)		DIN43653 (110mm)		Fuse Un [V]	Fuse In [A]	Qty. of fuses per phase 3~/6~
			aR fuse part nr.	Fuse size	aR fuse part nr.	Fuse size	aR fuse part nr.	Fuse size			
CH3	0016	16	170M1565	DIN000	170M1415	000T/80			690	63	1
CH3	0022	22	170M1565	DIN000	170M1415	000T/80			690	63	1
CH3	0031	31	170M1565	DIN000	170M1415	000T/80			690	63	1
CH3	0038	38	170M1565	DIN000	170M1415	000T/80			690	63	1
CH3	0045	45	170M1567	DIN000	170M1417	000T/80			690	100	1
CH3	0061	61	170M1567	DIN000	170M1417	000T/80			690	100	1
CH4	0072	72	170M3815	DIN1[1]	170M3065	1*TN/80	170M3215	1*TN/110	690	200	1
CH4	0087	87	170M3815	DIN1[1]	170M3065	1*TN/80	170M3215	1*TN/110	690	200	1
CH4	0105	105	170M3815	DIN1[1]	170M3065	1*TN/80	170M3215	1*TN/110	690	200	1
CH4	0140	140	170M3815	DIN1[1]	170M3065	1*TN/80	170M3215	1*TN/110	690	200	1
CH5	0168	168	170M3819	DIN1[1]	170M3069	1*TN/80	170M3219	1*TN/110	690	400	1
CH5	0205	205	170M3819	DIN1[1]	170M3069	1*TN/80	170M3219	1*TN/110	690	400	1
CH5	0261	261	170M3819	DIN1[1]	170M3069	1*TN/80	170M3219	1*TN/110	690	400	1
CH61	0300	300	170M5813	DIN2	170M5063	2TN/80	170M5213	2TN/110	690	700	1
CH61	0385	385	170M5813	DIN2	170M5063	2TN/80	170M5213	2TN/110	690	700	1
CH72	0460	460	170M6814	DIN3	170M6064	3TN/80	170M6214	3TN/110	690	1000	1
CH72[2]	*0460*	*460*	*170M6813*	*DIN2*	*170M5063*	*2TN/80*	*170M5213*	*2TN/110*	*690*	*700*	*1*
CH72	0520	520	170M6814	DIN3	170M6064	3TN/80	170M6214	3TN/110	690	1000	1
CH72[2]	*0520*	*520*	*170M6813*	*DIN2*	*170M5063*	*2TN/80*	*170M5213*	*2TN/110*	*690*	*700*	*1*
CH72	0590	590	170M6814	DIN3	170M6064	3TN/80	170M6214	3TN/110	690	1000	1
CH72[2]	*0590*	*590*	*170M6813*	*DIN2*	*170M5063*	*2TN/80*	*170M5213*	*32N/110*	*690*	*700*	*1*
CH72	0650	650	170M8547	3SHT[3]	170M6066	3TN/80	170M6216	3TN/110	690	1250	1
CH72[2]	*0650*	*650*	*170M5813*	*DIN2*	*170M5063*	*2TN/80*	*170M5213*	*2TN/110*	*690*	*700*	*1*
CH72	0730	730	170M8547	3SHT[3]	170M6066	3TN/80	170M6216	3TN/110	690	1250	1
CH72[2]	*0730*	*730*	*170M5813*	*DIN2*	*170M5063*	*2TN/80*	*170M5213*	*2TN/110*	*690*	*700*	*1*
CH63	0820	820	170M6812	DIN3	170M6062	3TN/80	170M6212	3TN/110	690	800	2
CH63	0920	920	170M6812	DIN3	170M6062	3TN/80	170M6212	3TN/110	690	800	2

Table 112. Fuse sizes (Bussman aR) for VACON® NX Liquid-Cooled (500 V) AC drives

Chassis	Type	Ith [A]	DIN43620		DIN43653 (80mm)		DIN43653 (110mm)		Fuse Un [V]	Fuse In [A]	Qty. of fuses per phase 3~/6~
			aR fuse part nr.	Fuse size	aR fuse part nr.	Fuse size	aR fuse part nr.	Fuse size			
CH63	1030	1030	170M6814	DIN3	170M6064	3TN/80	170M6214	3TN/110	690	1000	2
CH63	1150	1150	170M6814	DIN3	170M6064	3TN/80	170M6214	3TN/110	690	1000	2
CH74	1370	1370	170M6814	DIN3	170M6064	3TN/80	170M6214	3TN/110	690	1000	3
CH74[2]	*1370*	*1370*	*170M6812*	*DIN3*	*170M6062*	*3TN/80*	*170M6212*	*3TN/110*	*690*	*800*	*2*
CH74	1640	1640	170M6814	DIN3	170M6064	3TN/80	170M6214	3TN/110	690	1000	3
CH74[2]	*1640*	*1640*	*170M6812*	*DIN3*	*170M6062*	*3TN/80*	*170M6212*	*3TN/110*	*690*	*800*	*2*
CH74	2060	2060	170M8547	3SHT[3]	170M6066	3TN/80	170M6216	3TN/110	690	1250	3
CH74[2]	*2060*	*2060*	*170M6814*	*DIN3*	*170M6064*	*3TN/80*	*170M6214*	*3TN/110*	*690*	*1000*	*2*
CH74	2300	2300	170M8547	3SHT[3]	170M6066	3TN/80	170M6216	3TN/110	690	1250	3
CH74[2]	*2300*	*2300*	*170M6814*	*DIN3*	*170M6064*	*3TN/80*	*170M6214*	*3TN/110*	*690*	*1000*	*2*

[1] Tj = 25 °C

[2] Data in Italic refer to drives with 12-pulse supply

[3] SHT fuses can be assembled into DIN fuse base of the corresponding size

Table 113. Fuse sizes (Bussman aR) for VACON® NX Liquid-Cooled (690 V) AC drives

Chassis	Type	I_{th} [A]	DIN43620		DIN43653 (80mm)		DIN43653 (110mm)		Fuse U_n [V]	Fuse I_n [A]	Qty. of fuses per phase 3~/6~
			aR fuse part nr.	Fuse size	aR fuse part nr.	Fuse size	aR fuse part nr.	Fuse size			
CH61	0170	170	170M3819	DIN1[1]	170M3069	1*TN/80	170M3219	1*TN/110	690	400	1
CH61	0208	208	170M3819	DIN1[1]	170M3069	1*TN/80	170M3219	1*TN/110	690	400	1
CH61	0261	261	170M3819	DIN1[1]	170M3069	1*TN/80	170M3219	1*TN/110	690	400	1
CH72	0325	325	170M5813	DIN2	170M5063	2TN/80	170M5213	2TN/110	690	700	1
CH72[2]	*0325*	*325*	*170M3819*	*DIN1[1]*	*170M3069*	*1*TN/80*	*170M3219*	*1*TN/110*	*690*	*400*	*1*
CH72	0385	385	170M5813	DIN2	170M5063	2TN/80	170M5213	2TN/110	690	700	1
CH72[2]	*0385*	*385*	*170M3819*	*DIN1[1]*	*170M3069*	*1*TN/80*	*170M3219*	*1*TN/110*	*690*	*400*	*1*
CH72	0416	416	170M6812	DIN3	170M6062	3TN/80	170M6212	3TN/110	690	800	1
CH72[2]	*0416*	*416*	*170M3819*	*DIN1[1]*	*170M3069*	*1*TN/80*	*170M3219*	*1*TN/110*	*690*	*400*	*1*
CH72	0460	460	170M6812	DIN3	170M6062	3TN/80	170M6212	3TN/110	690	800	1
CH72[2]	*0460*	*460*	*170M3819*	*DIN1[1]*	*170M3069*	*1*TN/80*	*170M3219*	*1*TN/110*	*690*	*400*	*1*
CH72	0502	502	170M6812	DIN3	170M6062	3TN/80	170M6212	3TN/110	690	800	1
CH72[2]	*0502*	*502*	*170M3819*	*DIN1[1]*	*170M3069*	*1*TN/80*	*170M3219*	*1*TN/110*	*690*	*400*	*1*
CH63	0590	590	170M6814	DIN3	170M6064	3TN/80	170M6214	3TN/110	690	1100	1

Table 113. Fuse sizes (Bussman aR) for VACON® NX Liquid-Cooled (690 V) AC drives

Chassis	Type	I_{th} [A]	DIN43620		DIN43653 (80mm)		DIN43653 (110mm)		Fuse U_n [V]	Fuse I_n [A]	Qty. of fuses per phase 3~/6~
			aR fuse part nr.	Fuse size	aR fuse part nr.	Fuse size	aR fuse part nr.	Fuse size			
CH63	0650	650	170M8547	3SHT[3]	170M6066	3TN/80	170M6216	3TN/110	690	1250	1
CH63	0750	750	170M8547	3SHT[3]	170M6066	3TN/80	170M6216	3TN/110	690	1250	1
CH74	0820	820	170M5813	DIN2	170M5063	2TN/80	170M5213	2TN/110	690	700	3
CH74[2]	*0820*	*820*	*170M6812*	*DIN3*	*170M6062*	*3TN/80*	*170M6212*	*3TN/110*	*690*	*800*	*1*
CH74	0920	920	170M5813	DIN2	170M5063	2TN/80	170M5213	2TN/110	690	700	3
CH74[2]	*0920*	*920*	*170M6812*	*DIN3*	*170M6062*	*3TN/80*	*170M6212*	*3TN/110*	*690*	*800*	*1*
CH74	1030	1030	170M5813	DIN2	170M5063	2TN/80	170M5213	2TN/110	690	700	3
CH74[2]	*1030*	*1030*	*170M6814*	*DIN3*	*170M6064*	*3TN/80*	*170M6214*	*3TN/110*	*690*	*1000*	*1*
CH74	1180	1180	170M5813	DIN2	170M5063	2TN/80	170M5213	2TN/110	690	700	3
CH74[2]	*1180*	*1180*	*170M6814*	*DIN3*	*170M6064*	*3TN/80*	*170M6214*	*3TN/110*	*690*	*1000*	*1*
CH74	1300	1300	170M6814	DIN3	170M6064	3TN/80	170M6214	3TN/110	690	1000	3
CH74[2]	*1300*	*1300*	*170M8547*	*3SHT[3]*	*170M6066*	*3TN/80*	*170M6216*	*3TN/110*	*690*	*1250*	*1*
CH74	1500	1500	170M6814	DIN3	170M6064	3TN/80	170M6214	3TN/110	690	1000	3
CH74[2]	*1500*	*1500*	*170M8547*	*3SHT[3]*	*170M6066*	*3TN/80*	*170M6216*	*3TN/110*	*690*	*1250*	*1*
CH74	1700	1700	170M6814	DIN3	170M6064	3TN/80	170M6214	3TN/110	690	1000	3
CH74[2]	*1700*	*1700*	*170M6812*	*DIN3*	*170M6064*	*3TN/80*	*170M6212*	*3TN/110*	*690*	*800*	*1*

[1] Tj = 25 °C

[2] Data in Italic refer to drives with 12-pulse supply

[3] SHT fuses can be assembled into DIN fuse base of the corresponding size

Table 114. Fuse sizes (Bussman aR) for VACON® NX Liquid-Cooled (450—800 V) inverters

Chassis	Type	I_{th} [A]	DIN43620		DIN43653 (80mm)		DIN43653 (110mm)		Fuse U_n [V]	Fuse I_n [A]	Qty. of fuses/ pole
			aR fuse part nr.	Fuse size	aR fuse part nr	Fuse size	aR fuse part nr.	Fuse size			
CH3	0016	16	170M3810	DIN1[1]	170M3060	1*TN/80	170M3210	1*TN/110	690	63	1
CH3	0022	22	170M3810	DIN1[1]	170M3060	1*TN/80	170M3210	1*TN/110	690	63	1
CH3	0031	31	170M3810	DIN1[1]	170M3060	1*TN/80	170M3210	1*TN/110	690	63	1
CH3	0038	38	170M3813	DIN1[1]	170M3063	1*TN/80	170M3213	1*TN/110	690	125	1
CH3	0045	45	170M3813	DIN1[1]	170M3063	1*TN/80	170M3213	1*TN/110	690	125	1
CH3	0061	61	170M3813	DIN1[1]	170M3063	1*TN/80	170M3213	1*TN/110	690	125	1
CH4	0072	72	170M3815	DIN1[1]	170M3063	1*TN/80	170M3213	1*TN/110	690	200	1
CH4	0087	87	170M3815	DIN1[1]	170M3065	1*TN/80	170M3215	1*TN/110	690	200	1
CH4	0105	105	170M3815	DIN1[1]	170M3065	1*TN/80	170M3215	1*TN/110	690	200	1
CH4	0140	140	170M3819	DIN1[1]	170M3069	1*TN/80	170M3219	1*TN/110	690	400	1
CH5	0168	168	170M3819	DIN1[1]	170M3069	1*TN/80	170M3219	1*TN/110	690	400	1
CH5	0205	205	170M3819	DIN1[1]	170M3069	1*TN/80	170M3219	1*TN/110	690	400	1
CH5	0261	261	170M6808	DIN3	170M6058	3TN/80	170M6208	3TN/110	690	500	1
CH61	0300	300	170M6812	DIN3	170M6062	3TN/80	170M6212	3TN/110	690	800	1
CH61	0385	385	170M6812	DIN3	170M6062	3TN/80	170M6212	3TN/110	690	800	1
CH62	0460	460	170M6814	DIN3	170M6064	3TN/80	170M6214	3TN/110	690	1000	1
CH62	0520	520	170M6814	DIN3	170M6064	3TN/80	170M6214	3TN/110	690	1000	1
CH62	0590	590	170M6812	DIN3	170M6062	3TN/80	170M6212	3TN/110	690	800	2
CH62	0650	650	170M6812	DIN3	170M6062	3TN/80	170M6212	3TN/110	690	800	2
CH62	0730	730	170M6812	DIN3	170M6062	3TN/80	170M6212	3TN/110	690	800	2
CH63	0820	820	170M6814	DIN3	170M6064	3TN/80	170M6214	3TN/110	690	1000	2
CH63	0920	920	170M6814	DIN3	170M6064	3TN/80	170M6214	3TN/110	690	1000	2
CH63	1030	1030	170M6812	DIN3	170M6062	3TN/80	170M6212	3TN/110	690	800	3
CH63	1150	1150	170M6812	DIN3	170M6062	3TN/80	170M6212	3TN/110	690	800	3
CH64	1370	1370	170M8547	3SHT[2]	170M6066	3TN/80	170M6216	3TN/110	690	1250	3
CH64	1640	1640	170M8547	3SHT[2]	170M6066	3TN/80	170M6216	3TN/110	690	1250	3
CH64	2060	2060	170M8550	3SHT[2]	170M6069	3TN/80	170M6219	3TN/110	690	1600	3
CH64	2300	2300	170M8550	3SHT[2]	170M6069	3TN/80	170M6219	3TN/110	690	1600	3

[1] Tj = 25 °C

[2] SHT fuses can be assembled into DIN fuse base of the corresponding size

Fuse sizes (Bussman aR) for VACON® NX Liquid-Cooled (640—1100 V) inverters

Chassis	Type	I_{th} [A]	DIN43620		DIN43653 (110mm)		Fuse U_n [V]	Fuse I_n [A]	Qty. of fuses/ pole
			aR fuse part nr.	Fuse size[1]	aR fuse part nr.	Fuse size			
CH61	0170	170	170M4199	1SHT	170M4985	1TN/110	1250	400	1
CH61	0208	208	170M4199	1SHT	170M4985	1TN/110	1250	400	1
CH61	0261	261	170M6202	3SHT	170M8633	3TN/110	1250	500	1
CH62	0325	325	170M6305	3SHT	170M8636	3TN/110	1250	700	1
CH62	0385	385	170M6305	3SHT	170M8636	3TN/110	1250	700	1
CH62	0416	416	170M6277	3SHT	170M8639	3TN/110	1100	1000	1
CH62	0460	460	170M6277	3SHT	170M8639	3TN/110	1100	1000	1
CH62	0502	502	170M6277	3SHT	170M8639	3TN/110	1100	1000	1
CH63	0590	590	170M6305	3SHT	170M8636	3TN/110	1250	700	2
CH63	0650	650	170M6305	3SHT	170M8636	3TN/110	1250	700	2
CH63	0750	750	170M6305	3SHT	170M8636	3TN/110	1250	700	2
CH64	0820	820	170M6277	3SHT	170M8639	3TN/110	1100	1000	2
CH64	0920	920	170M6277	3SHT	170M8639	3TN/110	1100	1000	2
CH64	1030	1030	170M6277	3SHT	170M8639	3TN/110	1100	1000	3
CH64	1180	1180	170M6277	3SHT	170M8639	3TN/110	1100	1000	3
CH64	1300	1300	170M6277	3SHT	170M8639	3TN/110	1100	1000	3
CH64	1500	1500	170M6277	3SHT	170M8639	3TN/110	1100	1000	3
CH64	1700	1700	170M6277	3SHT	170M8639	3TN/110	1100	1000	3

[1] SHT fuses can be assembled into DIN fuse base of the corresponding size

Table 115. Fuse sizes (Bussman aR) for VACON® NX AFE units (380—500 V)

Chassis	Type	I_{th} [A]	DIN43620		DIN43653 (80mm)		DIN43653 (110mm)		Fuse U_n [V]	Fuse I_n [A]	Qty. of fuses / phase 3~
			aR fuse part nr.	Fuse size[1]	aR fuse part nr.	Fuse size[1]	aR fuse part nr.	Fuse size[1]			
CH3	0016	16	170M2679	DIN00	170M4828	00TN/80			1000	63	1
CH3	0022	22	170M2679	DIN00	170M4828	00TN/80			1000	63	1
CH3	0031	31	170M2679	DIN00	170M4828	00TN/80			1000	63	1
CH3	0038	38	170M2679	DIN00	170M4828	00TN/80			1000	63	1
CH3	0045	45	170M2683	DIN00	170M4832	00TN/80			1000	160	1
CH3	0061	61	170M2683	DIN00	170M4832	00TN/80			1000	160	1
CH4	0072	72	170M2683	DIN00	170M4832	00TN/80			1000	160	1
CH4	0087	87	170M2683	DIN00	170M4832	00TN/80			1000	16	1
CH4	0105	105	170M2683	DIN00	170M4832	00TN/80			1000	160	1
CH4	0140	140	170M4199	1SHT			170M4985	1TN/110	1250	400	1
CH5	0168	168	170M4199	1SHT			170M4985	1TN/110	1250	400	1
CH5	0205	205	170M4199	1SHT			170M4985	1TN/110	1250	400	1
CH5	0261	261	170M4199	1SHT			170M4985	1TN/110	1250	400	1
CH61	0300	300	170M6202	3SHT			170M8633	3TN/110	1250	500	1
CH61	0385	385	170M6305	3SHT			170M8636	3TN/110	1250	700	1

Table 115. Fuse sizes (Bussman aR) for VACON® NX AFE units (380—500 V)

Chassis	Type	I_{th} [A]	DIN43620		DIN43653 (80mm)		DIN43653 (110mm)		Fuse U_n [V]	Fuse I_n [A]	Qty. of fuses / phase 3~
			aR fuse part nr.	Fuse size[1]	aR fuse part nr.	Fuse size[1]	aR fuse part nr.	Fuse size[1]			
CH62	0460	460	170M6277	3SHT			170M8639	3TN/110	1100	1000	1
CH62	0520	520	170M6277	3SHT			170M8639	3TN/110	1100	1000	1
CH62	0590	590	170M6277	3SHT			170M8639	3TN/110	1100	1000	1
CH62	0650	650	170M6305	3SHT			170M8636	3TN/110	1250	700	2
CH62	0730	730	170M6305	3SHT			170M8636	3TN/110	1250	700	2
CH63	0820	820	170M6305	3SHT			170M8636	3TN/110	1250	700	2
CH63	0920	920	170M6277	3SHT			170M8639	3TN/110	1100	1000	2
CH63	1030	1030	170M6277	3SHT			170M8639	3TN/110	1100	1000	2
CH63	1150	1150	170M6277	3SHT			170M8639	3TN/110	1100	1000	2
CH64	1370	1370	170M6277	3SHT			170M8639	3TN/110	1100	1000	3
CH64	1640	1640	170M6277	3SHT			170M8639	3TN/110	1100	1000	3
CH64	2060	2060	170M6277	3SHT			170M8639	3TN/110	1100	1000	4
CH64	2300	2300	170M6277	3SHT			170M8639	3TN/110	1100	1000	4

[1] SHT fuses can be assembled into DIN fuse base of the corresponding size

Table 116. Fuse sizes (Bussman aR) for VACON® NX AFE units (525—690 V)

Chassis	Type	I_{th} [A]	DIN43620		DIN43653 (110mm)		Fuse U_n [V]	Fuse I_n [A]	Qty. of fuses / phase 3~
			aR fuse part nr.	Fuse size[1]	aR fuse part nr.	Fuse size[1]			
CH61	0170	170	170M4199	1SHT	170M4985	1TN/110	1250	400	1
CH61	0208	208	170M4199	1SHT	170M4985	1TN/110	1250	400	1
CH61	0261	261	170M4199	1SHT	170M4985	1TN/110	1250	400	1
CH62	0325	325	170M6305	3SHT	170M8636	3TN/110	1250	700	1
CH62	0385	385	170M6305	3SHT	170M8636	3TN/110	1250	700	1
CH62	0416	416	170M6305	3SHT	170M8636	3TN/110	1250	700	1
CH62	0460	460	170M6277	3SHT	170M8639	3TN/110	1100	1000	1
CH62	0502	502	170M6277	3SHT	170M8639	3TN/110	1100	1000	1
CH63	0590	590	170M6277	3SHT	170M8639	3TN/110	1100	1000	1
CH63	0650	650	170M6305	3SHT	170M8636	3TN/110	1250	700	2
CH63	0750	750	170M6305	3SHT	170M8636	3TN/110	1250	700	2
CH64	0820	820	170M6305	3SHT	170M8636	3TN/110	1250	700	2
CH64	0920	920	170M6277	3SHT	170M8639	3TN/110	1100	1000	2
CH64	1030	1030	170M6277	3SHT	170M8639	3TN/110	1100	1000	2
CH64	1180	1180	170M6277	3SHT	170M8639	3TN/110	1100	1000	2
CH64	1300	1300	170M6305	3SHT	170M8636	3TN/110	1250	700	3
CH64	1500	1500	170M6277	3SHT	170M8639	3TN/110	1100	1000	3

[1] SHT fuses can be assembled into DIN fuse base of the corresponding size

Table 117. Brake chopper unit fuse selection (Bussman aR), mains voltage 465–800 Vdc

Chassis	Type	Min resistor value, 2* [ohm]	Braking current	DIN43620		Fuse U_n [V]	Fuse I_n [A]	Qty. of fuses per pole
				aR fuse part nr.	Fuse size[1]			
CH3	0016	52.55	32	170M2679	DIN00	690	63	1
CH3	0022	38.22	44	170M2679	DIN00	690	63	1
CH3	0031	27.12	62	170M2679	DIN00	690	63	1
CH3	0038	22.13	76	170M2679	DIN00	690	63	1
CH3	0045	18.68	90	170M2683	DIN00	690	160	1
CH3	0061	13.78	122	170M2683	DIN00	690	160	1
CH4	0072	11.68	144	170M2683	DIN00	690	160	1
CH4	0087	9.66	174	170M2683	DIN00	690	160	1
CH4	0105	8.01	210	170M2683	DIN00	690	160	1
CH4	0140	6.01	280	170M4199	1SHT	690	400	1
CH5	0168	5.00	336	170M4199	1SHT	690	400	1
CH5	0205	4.10	410	170M4199	1SHT	690	400	1
CH5	0261	3.22	522	170M4199	1SHT	690	400	1
CH61	0300	2.80	600	170M6202	3SHT	690	500	1
CH61	0385	2.18	770	170M6305	3SHT	690	700	2
CH62	0460	1.83	920	170M6277	3SHT	690	1000	2
CH62	0520	1.62	1040	170M6277	3SHT	690	1000	2
CH62	0590	1.43	1180	170M6277	3SHT	690	1000	2
CH62	0650	1.29	1300	170M6305	3SHT	690	700	3
CH62	0730	1.15	1460	170M6305	3SHT	690	700	3

Table 118. Brake chopper unit fuse selection (Bussman aR), mains voltage 640–1100 Vdc

Chassis	Type	Min resistor value, 2* [ohm]	Braking current	DIN43620		Fuse U_n [V]	Fuse I_n [A]	Qty. of fuses per pole
				aR fuse part nr.	Fuse size[1]			
CH61	0170	6.51	340	170M6305	3SHT	1250	700	1
CH61	0170*	80	27	170M2679	DIN00	1000	63	1
CH61	0208	5.32	416	170M6277	3SHT	1250	1000	1
CH61	0208*	30	73	170M2683	DIN00	1000	160	1
CH61	0261	4.24	522	170M6277	3SHT	1250	1000	1
CH61	0261*	12	183	170M4199	1SHT	1250	400	1
CH62	0310	3.41	650	170M6305	3SHT	1250	700	2
CH62	0385	2.88	770	170M6277	3SHT	1250	1000	2
CH62	0416	2.66	832	170M6277	3SHT	1250	1000	2
CH62	0460	2.41	920	170M6277	3SHT	1250	1000	2
CH62	0502	2.21	1004	170M6277	3SHT	1250	1000	2

[1] SHT fuses can be assembled into DIN fuse base of the corresponding size

Local contacts: http://drives.danfoss.com/danfoss-drives/local-contacts/

VACON®

www.danfoss.com

Document ID:
DPD00887E
Rev. E

Sales code: DOC-INSNXPLC+DLUK

Vacon Ltd
Member of the Danfoss Group
Runsorintie 7
65380 Vaasa
Finland

EN Manual

BENDER
The Power in Electrical Safety©

ISOMETER®
iso685–D
iso685W–D
iso685–S
iso685W–S

AC/DC

Insulation Monitoring Device
for IT AC systems with galvanically connected rectifiers
and inverters and for IT DC systems



iso685-x_D00022_07_M_XXEN/01.2018

PLEASE READ THIS MANUAL AND ANY ACCOMPANYING DOCUMENTS CAREFULLY
AND KEEP THEM IN A SECURE PLACE FOR FUTURE REFERENCE.

Bender GmbH & Co. KG
P.O. Box 1161 • 35301 Gruenberg • Germany
Londorfer Straße 65 • 35305 Gruenberg • Germany

Tel.: +49 6401 807-0
Fax: +49 6401 807-259

Email: info@bender.de
Web: www.bender.de

Customer service:
Service hotline: 0700-BenderHelp (Telephone and Fax)
Carl-Benz-Straße 8 • 35305 Gruenberg • Germany

Tel.:+49 6401 807-760
Fax:+49 6401 807-629

Email:info@bender-service.com

© Bender GmbH & Co. KG
All rights reserved.
Reproduction only with permission
of the publisher.
Subject to change.

Table of contents

1. Important information 6
- 1.1 How to use this manual 6
- 1.2 Technical support 6
  - 1.2.1 End customer support and advice 6
  - 1.2.2 Repair 6
  - 1.2.3 Customer service 7
- 1.3 Training courses 7
- 1.4 Delivery conditions 7
- 1.5 Storage 7
- 1.6 Disposal 7

2. Safety instructions 8
- 2.1 General safety instructions 8
- 2.2 Work activities on electrical installations 8
- 2.3 Device-specific safety instructions 8
- 2.4 Intended use 9

3. Function 10
- 3.1 Features 10
- 3.2 Product description 10
  - 3.2.1 General product description 10
  - 3.2.2 Special ISOMETER® characteristics - sensor variant with front panel 10
- 3.3 Function description 10
- 3.4 Interfaces 11
- 3.5 Self test 11

4. Device overview 12
- 4.1 Dimensions 12
- 4.2 Device variants 12
- 4.3 Connections and panel 13
- 4.4 Display elements and device buttons 14
  - 4.4.1 Display elements 14
  - 4.4.2 Device buttons 14
- 4.5 Operation and Navigation 15
  - 4.5.1 Menu selectionl 15
  - 4.5.2 Selecting from a list 15
  - 4.5.3 Parameter selection and value setting 15
  - 4.5.4 Character input 15

5. Mounting 16
- 5.1 General instructions 16
- 5.2 Screw mounting 17
- 5.3 DIN rail mounting 17

6. Connection 18
- 6.1 Connection requirements 18
- 6.2 Connection to a 3(N)AC system 19
- 6.3 Connection to an AC system 20
- 6.4 Connection to a DC system 20
- 6.5 Connection to the supply voltage 21
- 6.6 Connection to the X1 inteface1 21
- 6.7 Connection to the Ethernet interface ETH 21
- 6.8 Connection to relay interfaces 1 and 2 22
- 6.9 Position the terminal covers and click it into place 22

7. Commissioning 23
- 7.1 General initial commissioning process 23
- 7.2 Initial commissioning 23
  - 7.2.1 Set language 23
  - 7.2.2 Set time and date 24
  - 7.2.3 Set system type 24
  - 7.2.4 Select a coupling device 24
  - 7.2.5 Set profile 24
  - 7.2.6 Set response value Ran1 for Alarm 1 24
  - 7.2.7 Set response value Ran2 for Alarm 2 24
- 7.3 Recommissioning 25

8. Display 26
- 8.1 Standarddisplay 26
- 8.2 Fault display (active) 26
- 8.3 Fault display (inactive) 27
- 8.4 Acknowledging a fault message 28
- 8.5 Data-isoGraph 28
- 8.6 History memory 29
- 8.7 Initial measurement 29

9. Menu structure 30

10. Settings 31

10.1 Settings in the device menu 31
10.1 (1.0) Alarm settings 31
10.1 (1.1) Insulation alarm 31
10.1 (1.1.1) Alarm 1 31
10.1 (1.1.2) Alarm 2 31
10.1 (1.1.3) Fault memory 31
10.1 (1.2) DC alarm 31
10.1 (1.2.1) Alarm 31
10.1 (1.2.2) U(DC-E) 31
10.1 (1.3) Profile 32
10.1 (1.4) System type 32
10.1 (1.5) Coupling 32
10.1 (1.6) Device 32
10.1 (1.7) t(Start) 32
10.1 (1.8) Coupling monitoring 32
10.1 (1.9) Inputs 32
10.1 (1.9.1) Digital 1 33
10.1 (1.9.1.1) Mode 33
10.1 (1.9.1.2) t(on) 33
10.1 (1.9.1.3) t(off) 33
10.1 (1.9.1.4) Function 33
10.1 (1.9.2) Digital 2 33
10.1 (1.9.3) Digital 3 33
10.1 (1.10) Outputs 34
10.1 (1.10.1) Relay 1 34
10.1 (1.10.1.1) TEST 34
10.1 (1.10.1.2) Relay mode 34
10.1 (1.10.1.3) Function 1 34
10.1 (1.10.1.4) Function 2 35
10.1 (1.10.1.5) Function 3 35
10.1 (1.10.2) Relay 2 35
10.1 (1.10.3) Digital 1 35
10.1 (1.10.3.1) TEST 35
10.1 (1.10.3.2) Mode 35
10.1 (1.10.3.3) Function 1 35
10.1 (1.10.3.4) Function 2 35
10.1 (1.10.3.5) Function 3 35
10.1 (1.10.4) Digital 2 35
10.1 (1.10.5) Buzzer 36
10.1 (1.10.5.1) TEST 36
10.1 (1.10.5.2) Function 1 36
10.1 (1.10.5.3) Function 2 36
10.1 (1.10.5.4) Function 3 36
10.1 (1.10.6) Analogue 36
10.1 (1.10.6.1) Mode 36
10.1 (1.10.6.2) Midscale 36
10.1 (1.10.6.3) TEST 37
10.1 (1.10.6.4) Function 37
10.1 (2.0) Data measured values 37
10.1 (3.0) Control 37
10.1 (4.0) History 37
10.1 (5.0) Device settings 37
10.1 (5.1) Language 37
10.1 (5.2) Clock 37
10.1 (5.2.1) Time 37
10.1 (5.2.2) Format (time) 38
10.1 (5.2.3) Summertime 38
10.1 (5.2.4) Date 38
10.1 (5.2.5) Format (date) 38
10.1 (5.2.6) NTP 38
10.1 (5.2.7) NTP server 38
10.1 (5.2.8) UTC 38
10.1 (5.3) Interface 38
10.1 (5.3.1) Write access 38
10.1 (5.3.2) Ethernet 38
10.1 (5.3.2.1) DHCP 38
10.1 (5.3.2.2) IP (manual configuration) 39
10.1 (5.3.2.3) SN (manual configuration) 39
10.1 (5.3.2.4) Std. GW (manual configuration) 39
10.1 (5.3.2.5) DNS server 39
10.1 (5.3.2.6) Domain 39
10.1 (5.3.3) BCOM 39
10.1 (5.3.3.1) System name 39
10.1 (5.3.3.2) Subsystem 39
10.1 (5.3.3.3) Device address 39
10.1 (5.3.3.4) Timeout 39
10.1 (5.3.3.5) TTL for subscription 39

10.1 (5.3.4) Modbus/TCP 39
10.1 (5.3.4.1) Port 502 39
10.1 (5.3.5) BS-Bus / RS-485 39
10.1 (5.3.5.1) Address 39
10.1 (5.4) Display 39
10.1 (5.4.1) Brightness 39
10.1 (5.5) Password 40
10.1 (5.5.1) Password 40
10.1 (5.5.2) Status 40
10.1 (5.6) Commissioning 40
10.1 (5.7) Data backup 40
10.1 (5.8) Service 40
10.1 (6.0) Info 40

11. Device communication 41
11.1 Ethernet interface 41
11.2 BCOM 41
11.3 Modbus/TCP 41
11.4 Web server 41
11.4.1 Web server user interface 42
11.4.2 Web server device menu (first level) 42
11.4.3 Webserver submenu tool 42
11.5 BS bus 43
11.5.1 Master-slave principle 43
11.5.2 Addresses and address ranges on the BS bus 43
11.5.3 RS-485 specifications/cables 43
11.5.4 Cable routing 43

12. Device profiles 44

13. Coupling devices 45
13.1 Connection using the AGH150W-4(DC) 46
13.2 Connection using the AGH150W-4 (3(N)AC) 46
13.3 Connection using the AGH520S (3(N)AC) 47
13.4 Connection using the AGH520S (3AC) 47
13.5 Connection using the AGH204S-4 48
13.6 Connection using the AGH676S-4 48

14. Diagrams 49
14.1 Response time profile power circuits 49
14.2 Response time profile control circuits 49
14.3 Response time profile generator 49
14.4 Response time profile high capacitance 49
14.5 Response time profile inverter > 10 Hz 50
14.6 Response time profile inverter < 10 Hz 50
14.7 Response time DC Alarm 50
14.8 Operating uncertainty 50

15. Alarm messages 51

16. Factory settings 52

17. Technical data 53
17.1 Tabular data 53
17.2 Device feature W 55
17.3 Standards and certifications 56
17.4 Ordering information 56
17.4.1 Device 56
17.4.2 Accessories 56
17.4.3 Suitable system components 56

18. Glossary 57

Index 58

1. Important information

1.1 How to use this manual



*This manual is intended for **qualified personnel** working in electrical engineering and electronics!*



*Read the manual **before** you begin to mount, connect, and commission the unit. Always keep the manual within easy reach for future reference following commissioning.*

To make it easier for you to understand and revisit certain sections in this manual, we have used symbols to identify important instructions and information. The meaning of these symbols is explained below.

DANGER

*This signal word indicates that there is a **high risk of danger** that will result in **electrocution** or **serious injury** if not avoided.*

WARNING

*This signal word indicates a **medium risk of danger** that can lead to **death** or **serious injury** if not avoided.*

CAUTION

*This signal word indicates a **low-level risk** that can result in minor or **moderate injury** or **damage to property** if not avoided.*

*This symbol denotes information intended to assist the user in making **optimum use** of the product.*

1.2 Technical support

For commissioning and troubleshooting Bender offers you:

1.2.1 End customer support and advice

Technical support by phone or e-mail for all Bender products

- Questions concerning specific customer applications
- Commissioning
- Troubleshooting

Telephone: +49 6401 807-760*
Fax: +49 6401 807-259
0700BenderHelp (Tel. and Fax in Germany only)
E-mail: support@bender-service.de

1.2.2 Repair

Repair, calibration, update and replacement service for Bender products

- Repairing, calibrating, testing and analysing Bender products
- Hardware and software update for Bender devices
- Delivery of replacement devices in the event of faulty or incorrectly delivered Bender devices
- Extended guarantee for Bender devices, which includes an in-house repair service or replacement devices at no extra cost

Telephone: +49 6401 807-780** (technical issues)
+49 6401 807-784**, -785** (sales)
Fax: +49 6401 807-789
E-mail: repair@bender-service.de

Please send the devices for **repair** to the following address:

Bender GmbH, Repair-Service,
Londorfer Strasse 65,
35305 Grünberg

1.2.3 Customer service

On-site service for all Bender products

- Commissioning, parameter setting, maintenance, troubleshooting for Bender products
- Analysis of the electrical installation in the building (power quality test, EMC test, thermography)
- Training courses for customers

Telephone: +49 6401 807-752**, -762 **(technical issues)
+49 6401 807-753** (sales)

Fax: +49 6401 807-759

E-mail: fieldservice@bender-service.de

Internet: www.bender-de.com

*Available from 7.00 a.m. to 8.00 p.m. 365 days a year (CET/UTC+1)

**Mo-Thu 7.00 a.m. - 8.00 p.m., Fr 7.00 a.m. - 13.00 p.m.

1.3 Training courses

Bender is happy to provide training regarding the use of test equipment.

The dates of training courses and workshops can be found on the Internet at

www.bender-de.com -> Know-how -> Seminars.

1.4 Delivery conditions

Bender sale and delivery conditions apply.

For software products, the "Softwareklausel zur Überlassung von Standard-Software als Teil von Lieferungen, Ergänzung und Änderung der Allgemeinen Lieferbedingungen für Erzeugnisse und Leistungen der Elektroindustrie" (software clause in respect of the licensing of standard software as part of deliveries, modifications and changes to general delivery conditions for products and services in the electrical industry) set out by the ZVEI (Zentralverband Elektrotechnik- und Elektronikindustrie e.V.) (German Electrical and Electronic Manufacturers' Association) also applies. Amending the “General Conditions for the supply of Products and Services of the Electrical and Electronics Industry” (GL)*

Sale and delivery conditions can be obtained from Bender in printed or electronic format.

Important information

1.5 Storage

The devices must only be stored in areas where they are protected from dust, damp, and spray and dripping water, and in which the specified storage temperatures can be ensured.

1.6 Disposal

Abide by the national regulations and laws governing the disposal of this device. Ask your supplier if you are not sure how to dispose of the old equipment.

The directive on waste electrical and electronic equipment (WEEE directive) and the directive on the restriction of certain hazardous substances in electrical and electronic equipment (RoHS directive) apply in the European Community. In Germany, these policies are implemented through the "Electrical and Electronic Equipment Act" (ElektroG). According to this, the following applies:

- Electrical and electronic equipment are not part of household waste.
- Batteries and accumulators are not part of household waste and must be disposed of in accordance with the regulations.
- Old electrical and electronic equipment from users other than private households which was introduced to the market after 13 August 2005 must be taken back by the manufacturer and disposed of properly.

For more information on the disposal of Bender devices, refer to our homepage at

www.bender-de.com -> Service & Support.

2. Safety instructions

2.1 General safety instructions

Part of the device documentation in addition to this manual is the enclosed "Safety instructions for Bender products".

2.2 Work activities on electrical installations.



*Only **qualified personnel** are permitted to carry out the work necessary to install, commission and run a device or system.*

DANGER

Danger of electrocution due to electric shock!
Touching live parts of the system carries the risk of:

- *A life threatening electric shock*
- *Damage to the electrical installation*
- *Destruction of the device*

***Before installing and connecting the device, make sure** that the **installation** has been **de-energised**. Observe the rules for working on electrical installations.*

If the device is used outside the Federal Republic of Germany, the applicable local standards and regulations must be complied with. The European standard EN 50110 can be used as a guide.

2.3 Device-specific safety instructions

WARNING

Make sure that the basic settings meet the requirements of the IT system. Persons without the required expertise, in particular children, must not have access to or contact with the ISOMETER®.

CAUTION

Make sure that the operating voltage is correct!
Prior to insulation and voltage tests, the ISOMETER® must be disconnected from the IT system for the duration of the test. In order to check that the device has been correctly connected, a functional test must be carried out before starting the system.

In the event of an alarm message of the ISOMETER®, the insulation fault should be eliminated as quickly as possible.

If the ISOMETER® is installed inside a control cabinet, the insulation fault message must be audible and/or visible to attract attention.

When using ISOMETER®s in IT systems, make sure that only ONE active ISOMETER® is connected in each galvanically interconnected system. If IT systems are interconnected via coupling switches, make sure that ISOMETER®s not currently used are disconnected from the IT system and deactivated. IT systems coupled via diodes or capacitances may also influence the insulation monitoring process so that a central control of the different ISOMETER®s is required.

Prevent measurement errors!
When a monitored IT system contains galvanically coupled DC circuits, an insulation fault can only be detected correctly if the rectifier valves (e.g. rectifier diode, thyristors, IGBTs, frequency inverters, …) carry a minimum current of > 10 mA.

Unspecified frequency range
When connecting to an IT system with frequency components below the specified frequency range, the response times and response values may differ from the indicated technical data. However, depending on the application and the selected measurement profile, continuous insulation monitoring is also possible in this frequency range.
There is no influence on the insulation monitoring for IT systems with frequency components above the specified frequency range, e.g. within the range of typical switching frequencies of frequency inverters (2…20 kHz).

Safety instructions

2.4 Intended use



*Only **qualified personnel** are permitted to carry out the work necessary to install, commission and run a device or system.*



*Read the manual **before** you begin to mount, connect, and commission the unit. Always keep the manual within easy reach for future reference following commissioning.*

The ISOMETER® iso685–x monitors the insulation resistance of unearthed AC/DC main circuits (IT systems) with mains voltages of AC 0…690 V or DC 0…1000 V. The operating range of the nominal voltage U_n can be extended via coupling devices.

DC components existing in AC/DC systems do not influence the operating characteristics. Due to the separate supply voltage, de-energised systems can also be monitored. The maximum permissible system leakage capacitance is 0…1000 µF, depending on the profile.

Intended use also implies:

- Observation of all information in the operating manual
- Compliance with test intervals

In order to meet the requirements of applicable standards, customised parameter settings must be made on the equipment in order to adapt it to local equipment and operating conditions. Please heed the limits of the range of application indicated in the technical data.

Any use other than that described in this manual is regarded as improper.

3.1 Features

- ISOMETER® for IT AC systems with galvanically connected rectifiers or inverters and for IT DC systems (IT = unearthed systems)
- Automatic adaptation to the existing system leakage capacitance
- Combination of ***AMP**Plus* and other profile-specific measurement methods
- Two separately adjustable response value ranges of 1 kΩ…10 MΩ for Alarm 1 and Alarm 2
- Hgh-resolution graphical LC display
- Connection monitoring (monitoring of the measuring lines)
- Automatic device self test
- Graphical representation of the insulation resistance over time (isoGraph)
- History memory with real-time clock (buffer for three days) for storing 1023 alarm messages with date and time
- Current or voltage output 0(4)…20 mA, 0…400 µA, 0…10 V, 2…10 V (galvanically separated), which is analogous to the measured insulation value of the system
- Freely programmable digital inputs and outputs
- Remote setting via the Internet or Intranet (Webserver/Option: COMTRAXX® gateway)
- Worldwide remote diagnosis via the Internet (made available by Bender Service only)
- RS-485/BS (Bender sensor bus) for data exchange with other Bender devices
- BCOM, Modbus TCP and web server

3.2 Product description

3.2.1 General product description

The ISOMETER® is an insulation monitoring device for IT systems in accordance with IEC 61557-8.

It is universally applicable in AC, 3(N)AC, AC/DC and DC systems. AC systems may include extensive DC-supplied loads (such as rectifiers, inverters, variable-speed drives).

3.2.2 Special ISOMETER® characteristics - sensor variant with front panel

The ISOMETER® iso685–D belongs to the iso685 device family and features an integrated display. This manual applies in full to this ISOMETER®.

The ISOMETER® iso685–S is the sensor variant from the iso685 device family. The only difference between this variant and the ISOMETER® iso685–D is that it does not have a display. The ISOMETER® iso685–S must be used in combination with a front panel through which it is operated. The operation of the front panel is equal to the operation of the ISOMETER® with an integrated display, which is described in this manual.

Only the sensor variant (i.e. ISOMETER® iso685–S) can be connected to the front panel. Connection to the display variant (i.e ISOMETER® iso685–D) is not possible.

Hereafter, the ISOMETER®s with integrated display are described. This description is similar to the combination of ISOMETER® sensor variants and the front panel FP200. The devices to which this manual applies will be referred to as ISOMETER®s hereafter.

3.3 Function description

The insulation monitoring device continuously monitors the entire insulation resistance of an IT system during operation and triggers an alarm when the value falls below a preset response value. To obtain a measurement the device has to be connected between the IT system (unearthed system) and the protective earth conductor (PE). A measuring current in the µA range is superimposed onto the system which is recorded and evaluated by a microprocessor-controlled measuring circuit. The measuring time is dependent on the selected measurement profiles, the system leakage capacitance, the insulation resistance and possible system-related disturbances.

The response values and other parameters are set using a commissioning wizard as well as via different setup menus using the device buttons and a high-resolution graphical LC display. The selected settings are stored in a permanent fail-safe memory. Different languages can be selected for the setup menus as well as the messages indicated on the display. The device utilises a clock for storing fault messages and events in a history memory with time and date stamp. The settings can be password protected to prevent unauthorised changes.

To ensure proper functioning of connection monitoring, the device requires the setting of the system type 3AC, AC or DC and the required use of the appropriate terminals L1/+, L2, L3/-.

To extend the nominal voltage range, different coupling devices are available as accessories which can be selected from a menu where the required adjustments can also be made.

The insulation monitoring device iso685–x is able to measure the insulation resistance reliably and precisely in all common IT systems (unearthed systems). Due to various applications, system types, operating conditions, application of variable-speed drives, high system leakage capacitances etc., the measurement technique must be able to meet varying requirements in order to ensure an optimised response time and relative uncertainty. Therefore different measuring profiles can be selected with which the device can optimally adjusted.

If the preset response value falls below the value of Alarm 1 and/or Alarm 2, the associated alarm relays switch, the LEDs ALARM 1 or ALARM 2 light and the measured value is shown on the LC display (in case of insulation faults in DC systems, a trend graph for the faulty conductor L+/L- is displayed). If the fault memory is activated, the fault message will be stored. Pressing the RESET button resets the insulation fault message, provided that the current insulation resistance displayed at the time of resetting is at least 25 % above the actual response value.

As additional Information, the quality of the measuring signal and the time required to update the measured value are shown on the display. A poor signal quality (1-2 bars) may be an indication that the wrong measurement profile has been selected.

The ISOMETER® is able to synchronise itself with other ISOMETER®s. This makes it possible to monitor capacitive coupled IT systems without interfering with each other.

3.4 Interfaces

- Communication protocol Modbus/TCP
- BCOM to communicate with Bender devices via Ethernet
- BS bus for communication of Bender devices (RS-485)
- Integrated web server to read measured values and for parameter setting

3.5 Self test

After switching on the supply voltage, the ISOMETER, by means of the self-test functions, automatically and continuously checks all internal measuring functions, the components of the process control, such as the data and parameter memory, as well as the connections to the IT system and earth.

The self test can also be activated manually by means of the test button to check the functions of the relays (depending on the configuration) or it can be selected via the "Control" menu (refer to “Control” on page 37).

The progress of the manual self test is shown on the LC display by a bar graph. Depending on the conditions in the IT system being monitored, the self test is completed after 15...20 seconds. The device then returns to the standard mode (i.e. measurement mode) and the actual measured value will be displayed after the measuring time has expired. The display shows the message `Initial measurement` until the first valid value is measured (refer to “Initial measurement” on page 29).

If a fault is detected during the self test, the respective LEDs of the device light (refer to “Alarm messages” on page 51). In addition, the respective message will be indicated on the display and a previously programmed output will provide the respective signal.

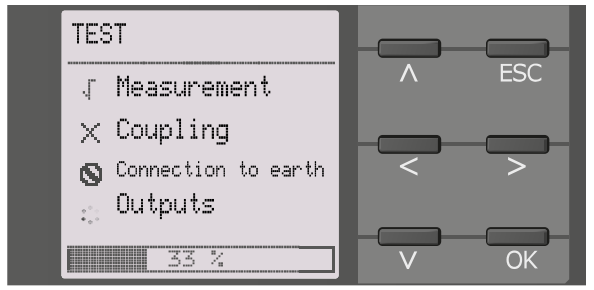

	Test successful
	Test not successful
	Test not available (e.g. faulty device settings).
	Test is being carried out.

4.1 Dimensions

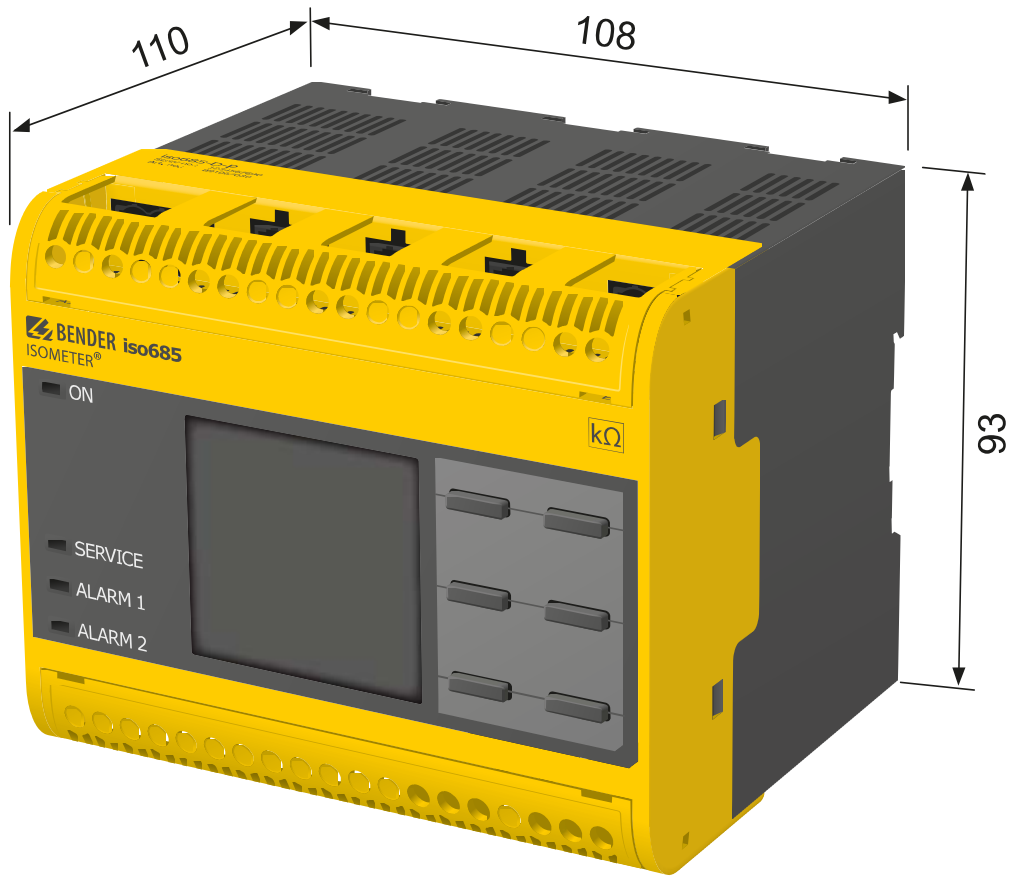

Dimensions in mm.

4.2 Device variants

iso685–D	The device version iso685–D features a high-resolution graphical LC display and control elements for direct operation of the device functions. It **cannot** be combined with an FP200.



iso685–S	The iso685–S device contains **no display** and **no operating unit**. It can **only be used in combination with FP200W** and is indirectly operated via this front panel.

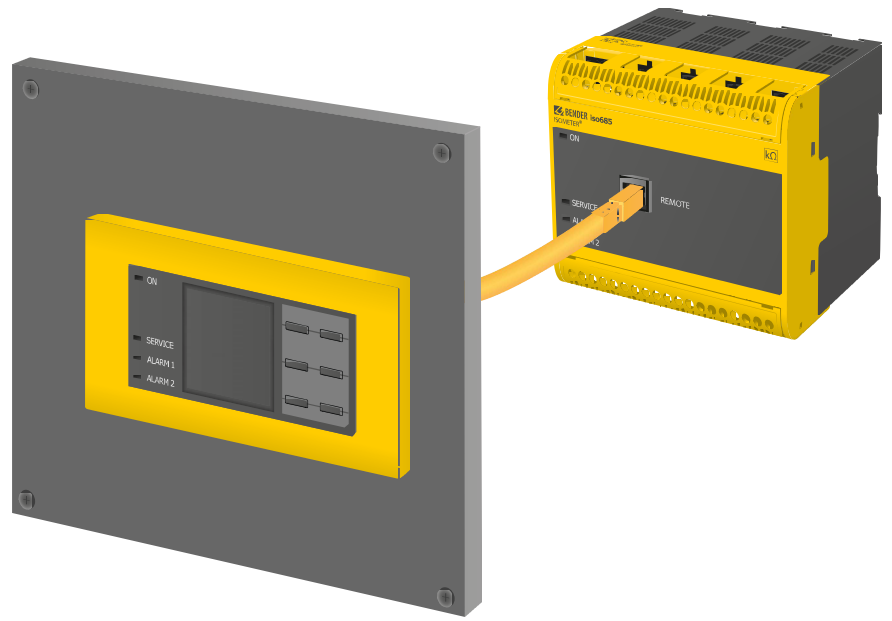

4.3 Connections and panel

Top

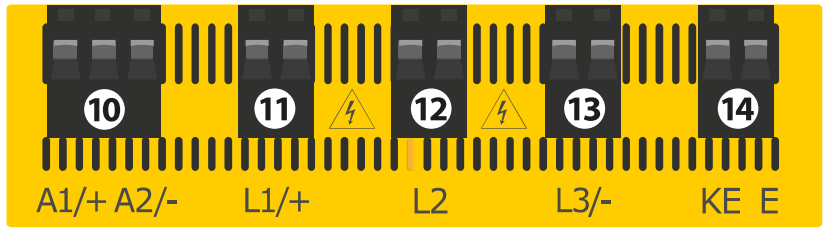

10	A1/+, A2/-	Connection to the power supply U_s
11	L1/+	Connection to the IT system to be monitored
12	L2	Connection to the IT system to be monitored
13	L3/-	Connection to the IT system to be monitored
14	KE, E	Connection to PE

Front

iso685–S

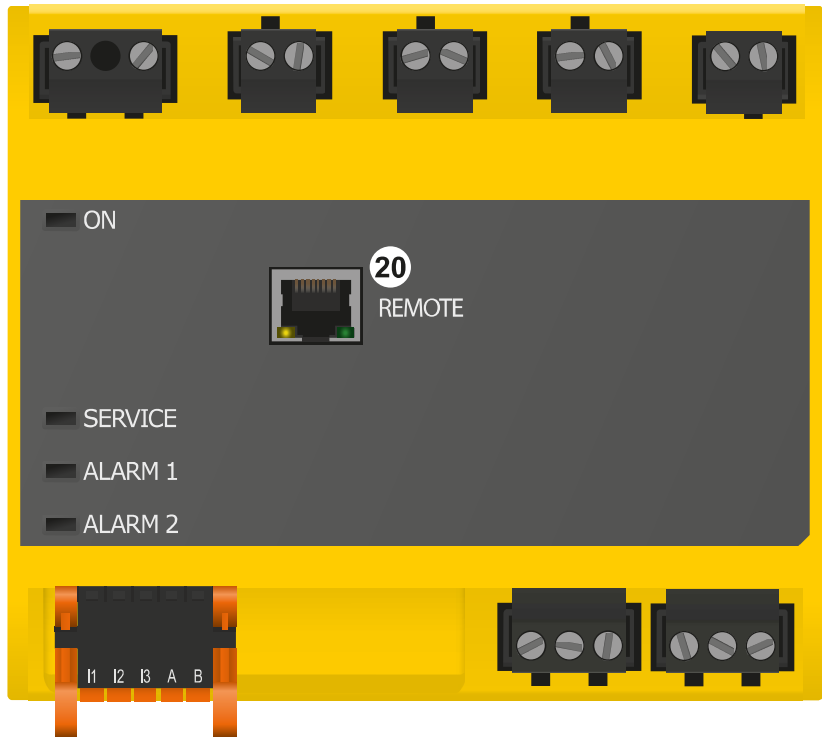

Connection Top

Panel

Connection bottom

iso685–D

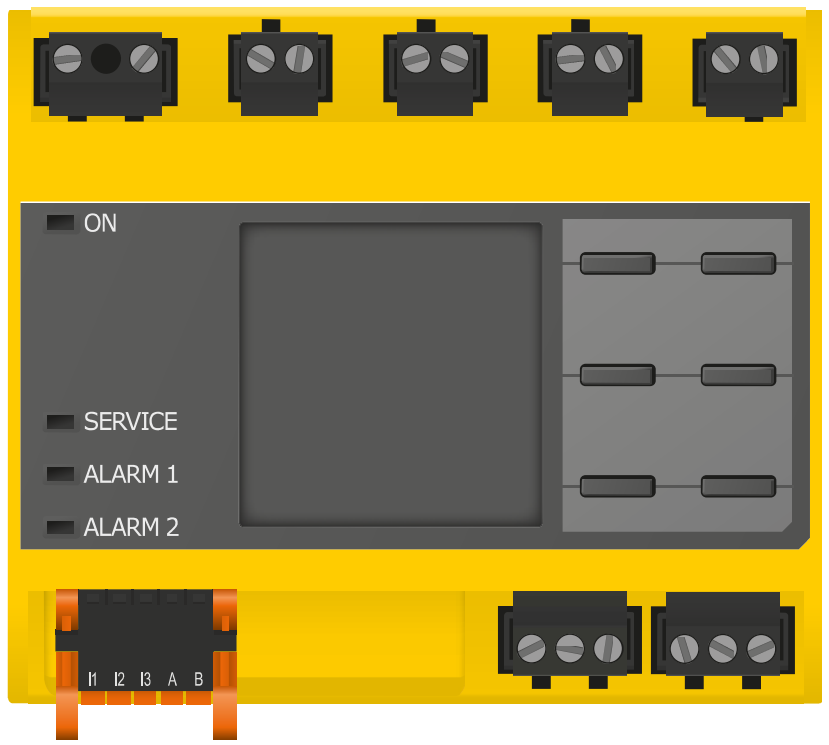

Rear

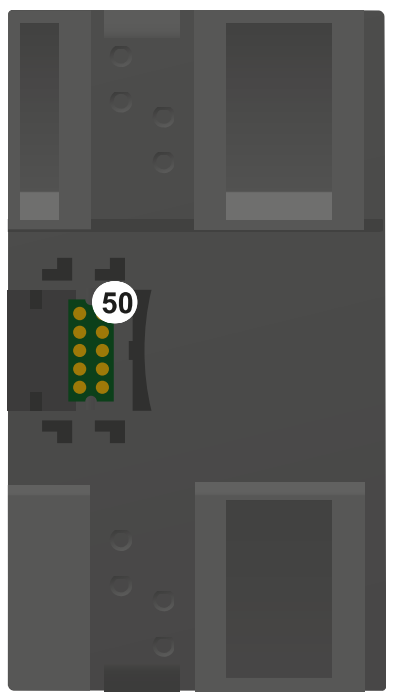

Bottom

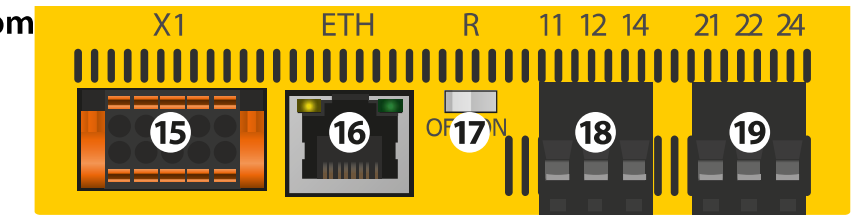

20	X4	REMOTE interface to connect to the FP200(W) *
50	X3	Optional expansion module (BB-Bus) for Bender devices (e.g. BB Bus)
15	X1	Multifunctional I/O interface (refer to Page 21)
16	ETH (X2)	Ethernet interface
17	R	Switchable terminating resistor for termination of the RS-485 interface
18	11 12 14	Connector for alarm relay 1
19	21 22 24	Connector for alarm relay 2

** The connection between the iso685 device and an FP200 (W) may only be established when the device is switched off and de-energized.*

Device overview

4.4 Display elements and device buttons

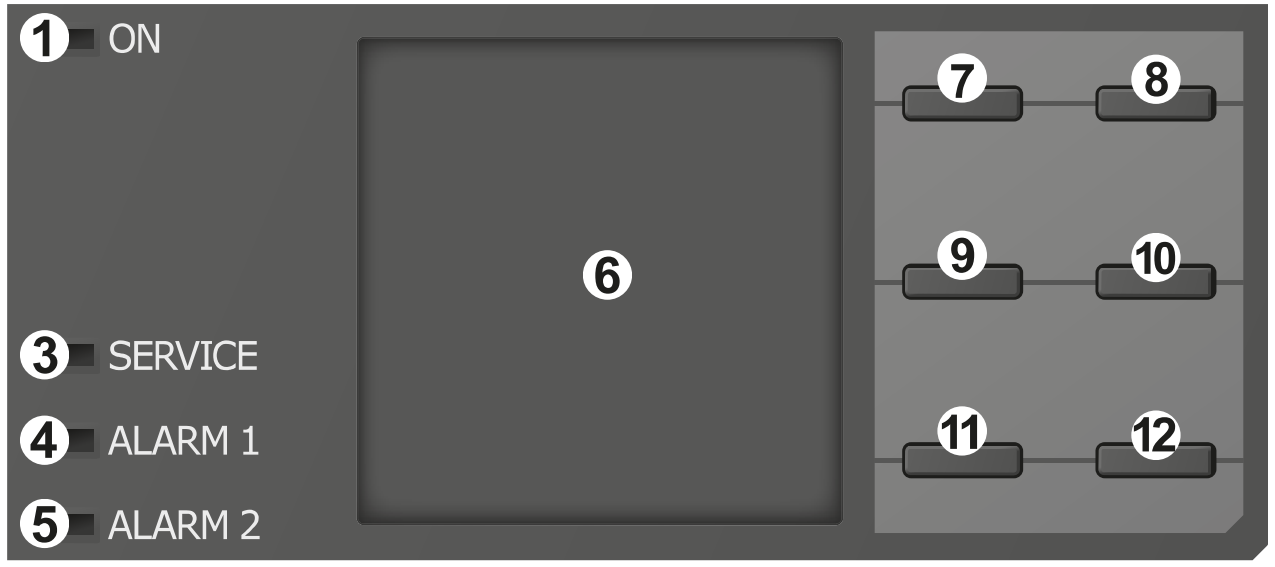

4.4.1 Display elements

1	ON	The LED "ON" lights when the device is turned on.
3	SERVICE	The LED "SERVICE" lights when there is either a device fault or a connection fault, or when the device is in maintenance mode.
4	ALARM 1	The LED "ALARM 1" lights when the insulation resistance of the IT system falls below the set response value R_{an1}.
5	ALARM 2	The LED "ALARM 2" lights when the insulation resistance of the IT system falls below the set response value R_{an2}.
6	Display	The device display shows information regarding the device and the measurements. Further information is available in the chapter"Display" from page 26.

4.4.2 Device buttons

The device settings can be adjusted in the respective menu using the menu buttons. Depending on the menu entry, one of the options displayed below is assigned to the buttons.

7	∧	Navigates up in a list or increases a value.
8	MENU	Opens the device menu.
	ESC	Cancels the current process or navigates one step back in the device menu.
9	RESET	Resets alarms.
	<	Navigates backwards (e.g. to the previous setting step) or selects a parameter.
10	TEST	Starts the device self test.
	>	Navigates forwards (e.g. to the next setting step) or selects a parameter.
11	DATA	Indicates data and values.
	∨	Navigates down in a list or reduces a value.
12	INFO	Shows information.
	OK	Confirms an action or a selection.

Device overview

4.5 Operation and Navigation

4.5.1 Menu selectionl

The menu is activated with the "Menu" button

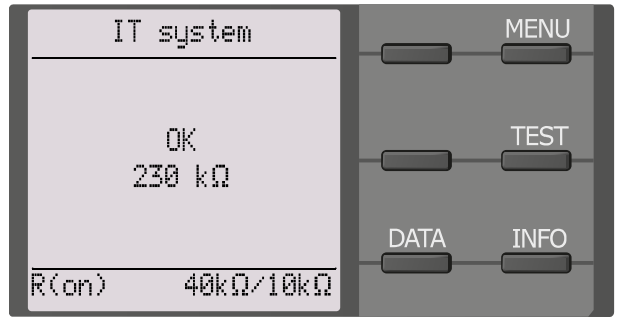

To select a value in a given list (Menu), navigate with the > button. Press "ESC" to exit to the respective menu level.

Information about the device menu can be found in the chapter entitled "" on page 30.

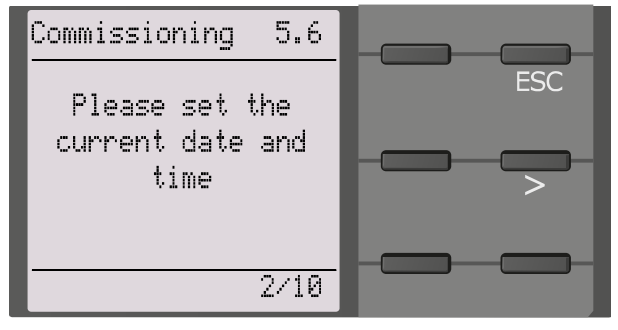

4.5.2 Selecting from a list

To select a value in a given list (Menu), navigate with the V and Λ buttons. The current value is indicated by a black menu point.Confirm the selection with the "OK" button. To exit the list, press the "ESC" button.

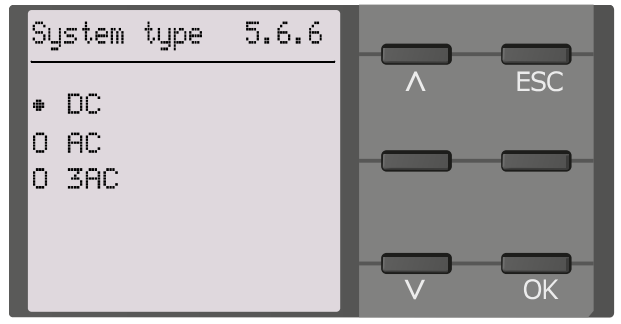

4.5.3 Parameter selection and value setting

The parameters are selected using the < and > buttons.The current parameter is indicated by the ▄▀▄ symbol.Values can be changed with the V and Λ buttons. Confirm the text input with the "OK" button. To exit text input, press "ESC".

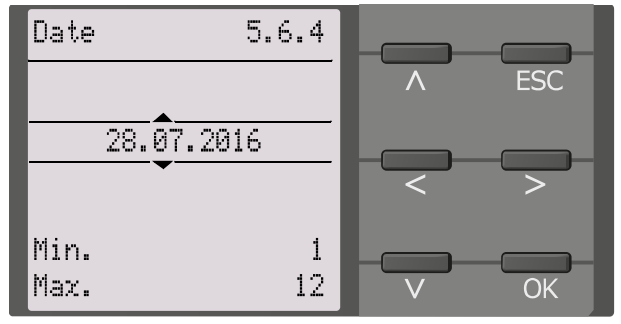

4.5.4 Character input

Select the required character with the V button (forwards) and the Λ button (backwards). To enter the next character, use the > button to select the next position.

To delete a character that has been entered, use the< and > buttons to navigate to the character to be deleted and then select "del" using the V and Λ buttons.

Confirm the entered text with "OK". Press "ESC" to exit character input.

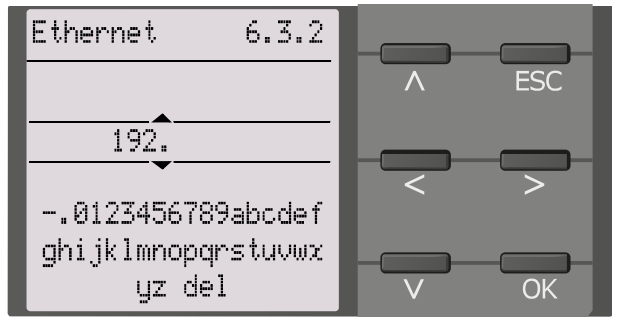

5.1 General instructions



*Only **qualified personnel** are permitted to carry out the work necessary to install, commission and run a device or system.*



*Read the manual **before** you begin to mount, connect, and commission the unit. Always keep the manual within easy reach for future reference following commissioning.*

DANGER

Danger of electrocution due to electric shock!
Touching live parts of the system carries the risk of:

- *A life threatening electric shock*
- *Damage to the electrical installation*
- *Destruction of the device*

***Before installing and connecting the device, make sure** that the **installation** has been **de-energised**. Observe the rules for working on electrical installations.*

5.2 Screw mounting

1. Fix the three mounting clips delivered with the device (two of them packed separately) manually or using a tool, as illustrated below.
2. Drill the mounting holes for the M4 thread according to the drilling template.
3. Fix the ISOMETER® using three M4 screws.

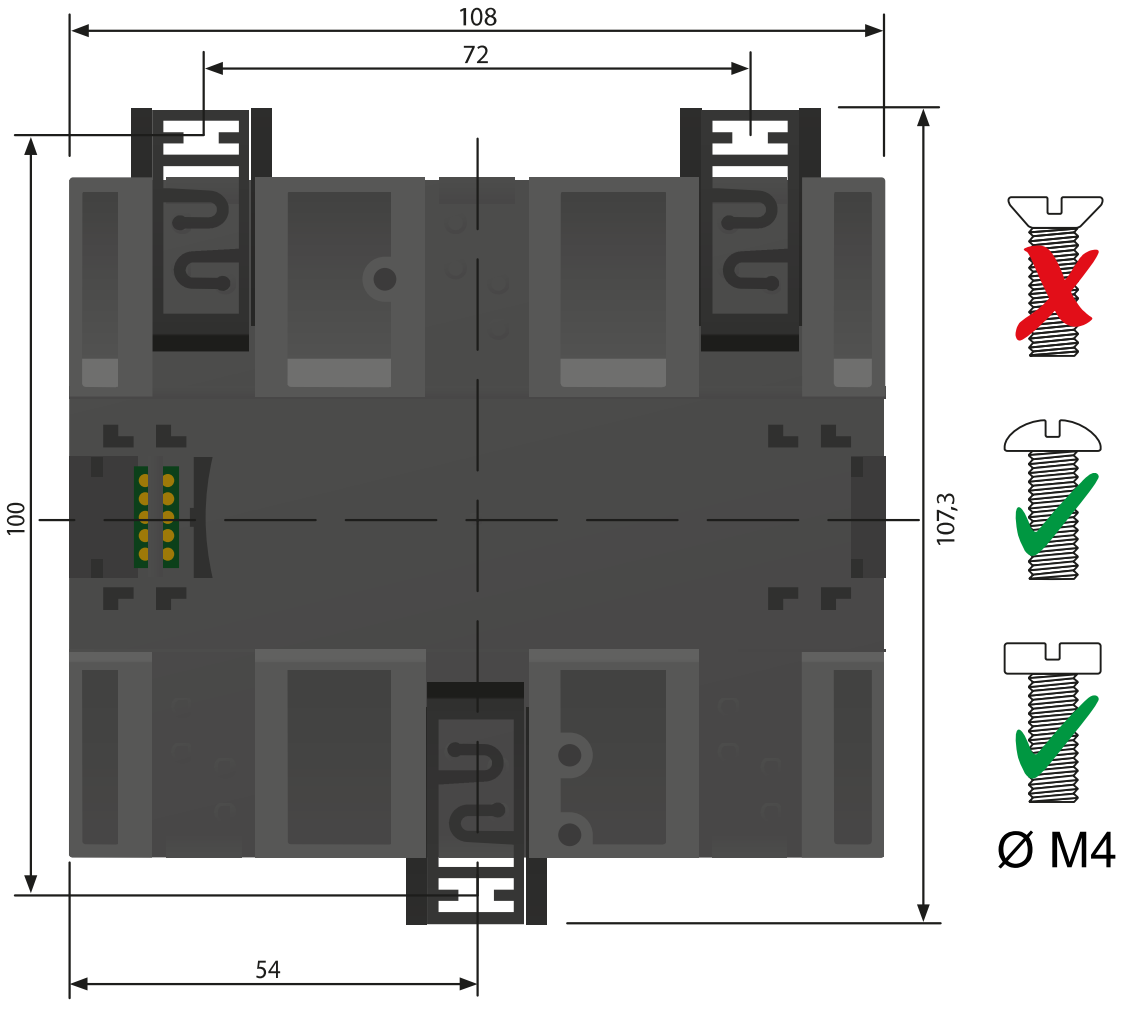

Dimensions in mm.

5.3 DIN rail mounting

1. Fix the three mounting clips delivered with the device (two of them packed separately) manually or using a tool, as illustrated below.
2. Mount the ISOMETER® onto the DIN rail.
3. Fix the ISOMETER® onto the DIN rail by pressing the mounting clips until they snap into place

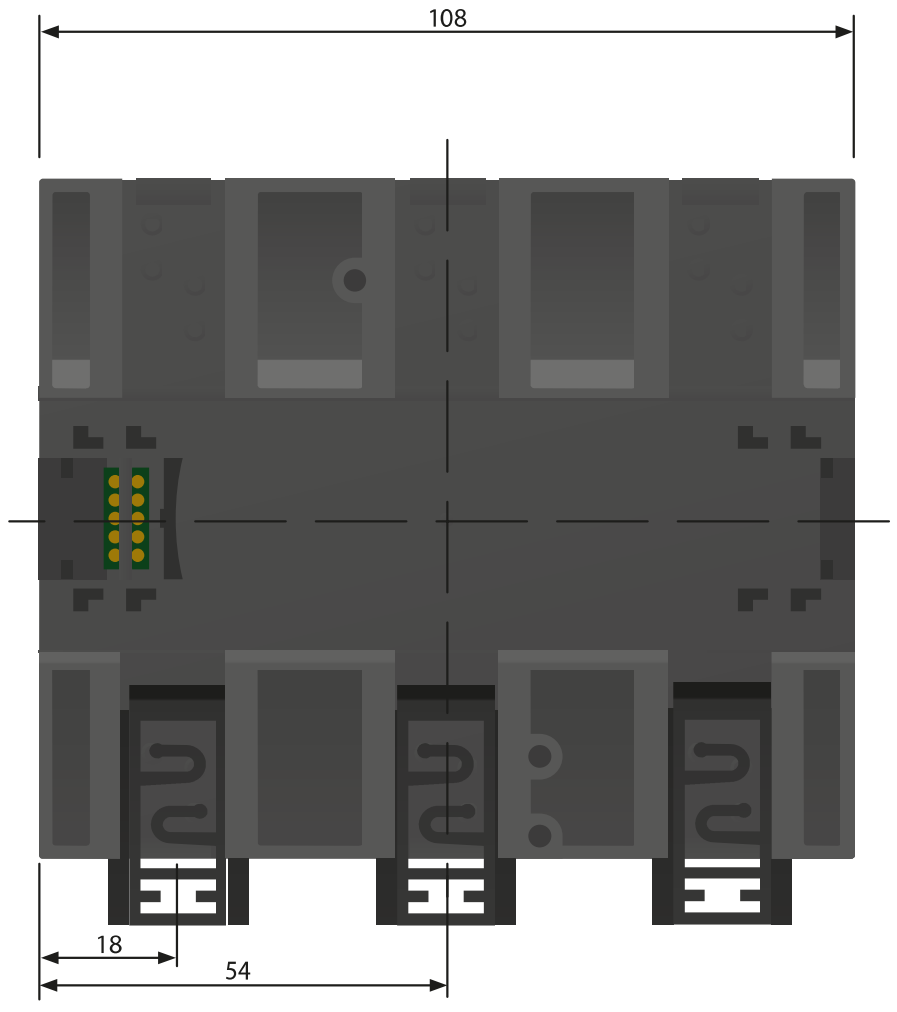

Dimensions in mm.

Mounting clips:
The installation of a third mounting clip is only required for "W variants".

6. Connection

6.1 Connection requirements

Consider the minimum distance to adjacent devices: lateral 0 mm, top 20 mm, bottom 20 mm.



*According to IEC 60364 (VDE 0100), only **qualified personnel** are permitted to carry out the work necessary to install, commission and run a device or system.*

DANGER

Danger of electrocution due to electric shock!
Touching live parts of the system carries the risk of:

- *A life threatening electric shock*
- *Damage to the electrical installation*
- *Destruction of the device*

***Before installing and connecting the device, make sure** that the **installation** has been **de-energised**. Observe the rules for working on electrical installations.*

DANGER

Danger of electric shock!
High voltage can be applied to the terminals L1/+ to L3/- which can be lethal if directly contacted.

- *Make sure that the terminal covers are properly mounted and clicked in before you use the device.*
- *If the device is connected via terminals L1/+, L2, L3/- to an IT system that is live for operational reasons, terminals KE and E must not be disconnected from the protective earth conductor (PE).*
- *Connect the terminals KE and E individually to the protective earth conductor PE.*

CAUTION

Provide line protection!
According to IEC 60364-4-43, a line protection shall be provided for the supply voltage.

CAUTION

Risk of injury from sharp-edged terminals!
Risk of lacerations.
Touch the enclosure and the terminals with due care.

CAUTION

Ensure disconnection from the IT system!
When insulation or voltage tests are to be carried out, the device must be isolated from the system for the test period. Otherwise the device may be damaged.

CAUTION

Risk of property damage due to unprofessional installation!
*Make sure that only **one** insulation monitoring device is connected in each conductively connected system. If several devices are connected, the device does not function and does not signal insulation faults. As a result, the system can be damaged.*

CAUTION

Risk of property damage due to unprofessional installation!
Load currents can result in damage to property and personal injury. For this reason, do not run any load current through the terminals. The connecting lines L1/+, L2, L3/- to the system to be monitored must be carried out as spur lines.

CAUTION

Malfunction due to incorrect connection
If the device is not connected as is described in the manual, deviations in the technical data and functin restrictions may result.

Check proper connection!
Prior to commissioning of the installation, check that the device has been properly connected and check the device functions. Perform a functional test using an earth fault via a suitable resistance.

Prevent measurement errors!
When an AC system being monitored contains galvanically coupled DC circuits, take into consideration that: An insulation fault can only be detected correctly when the rectifier valves carry a minimum current of > 10 mA.

For UL applications:
Only use 60/70°C copper lines!
UL and CSA applications require the supply voltage to be protected via 5 A fuses.

Connection

6.2 Connection to a 3(N)AC system

WARNING

Risk of injury, fire and damage to property due to a short circuit!
According to DIN VDE 0100-430, devices used to protect against a short circuit when terminals L1/+, L2 und L3/- are coupled to the IT system to be monitored can be omitted if the wiring is carried out in such a manner as to reduce the risk of a short circuit to a minimum. Ensure short-circuit proof and earth-fault proof wiring.

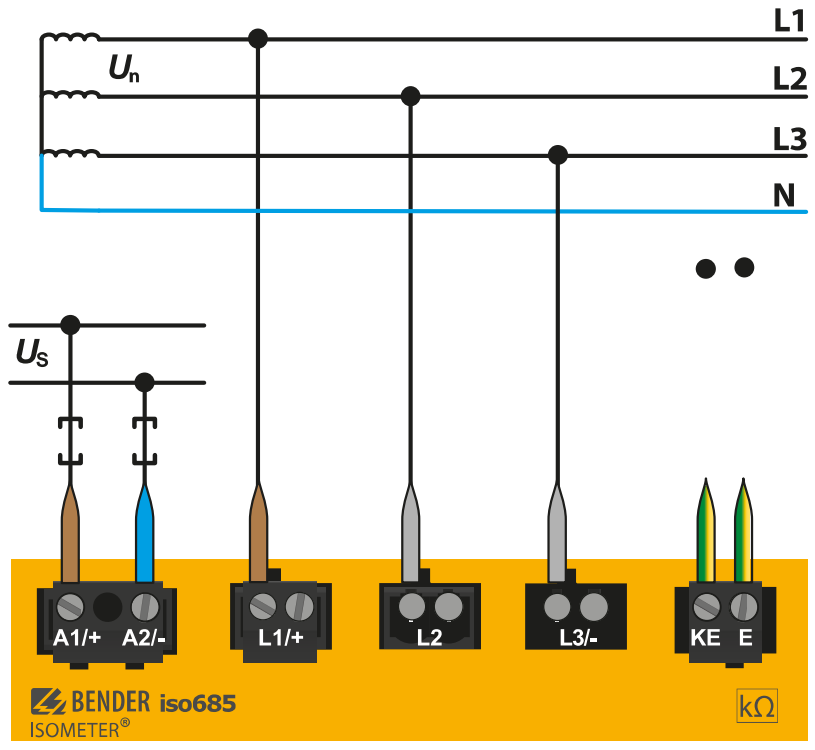

6.3 Connection to an AC system

WARNING

Risk of injury, fire and damage to property due to a short circuit!
According to DIN VDE 0100-430, devices used to protect against a short circuit when terminals L1/+, L2 und L3/- are coupled to the IT system to be monitored can be omitted if the wiring is carried out in such a manner as to reduce the risk of a short circuit to a minimum. Ensure short-circuit proof and earth-fault proof wiring.

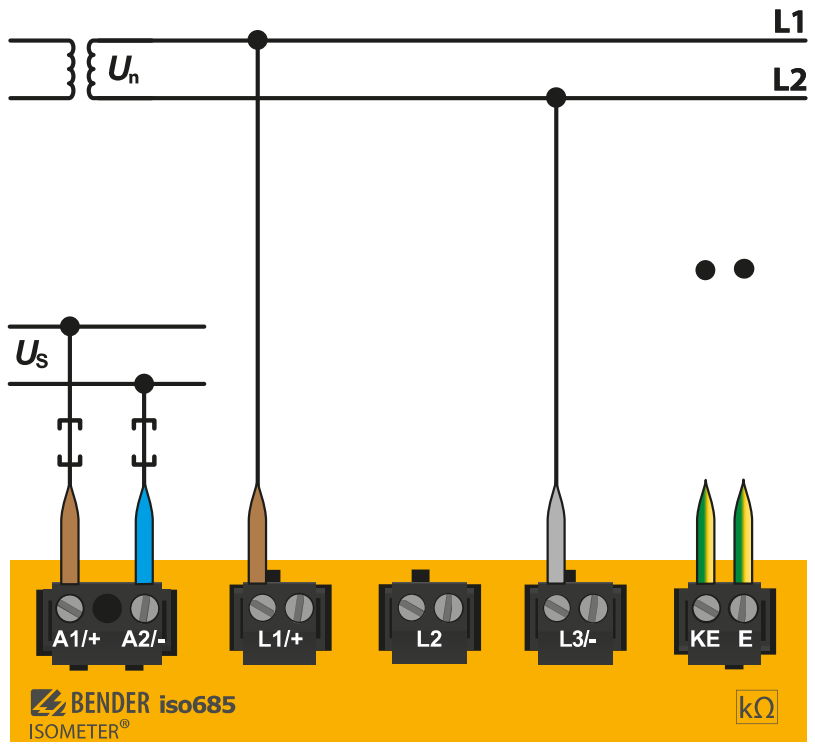

6.4 Connection to a DC system

WARNING

Risk of injury, fire and damage to property due to a short circuit!
According to DIN VDE 0100-430, devices used to protect against a short circuit when terminals L1/+, L2 und L3/- are coupled to the IT system to be monitored can be omitted if the wiring is carried out in such a manner as to reduce the risk of a short circuit to a minimum. Ensure short-circuit proof and earth-fault proof wiring.

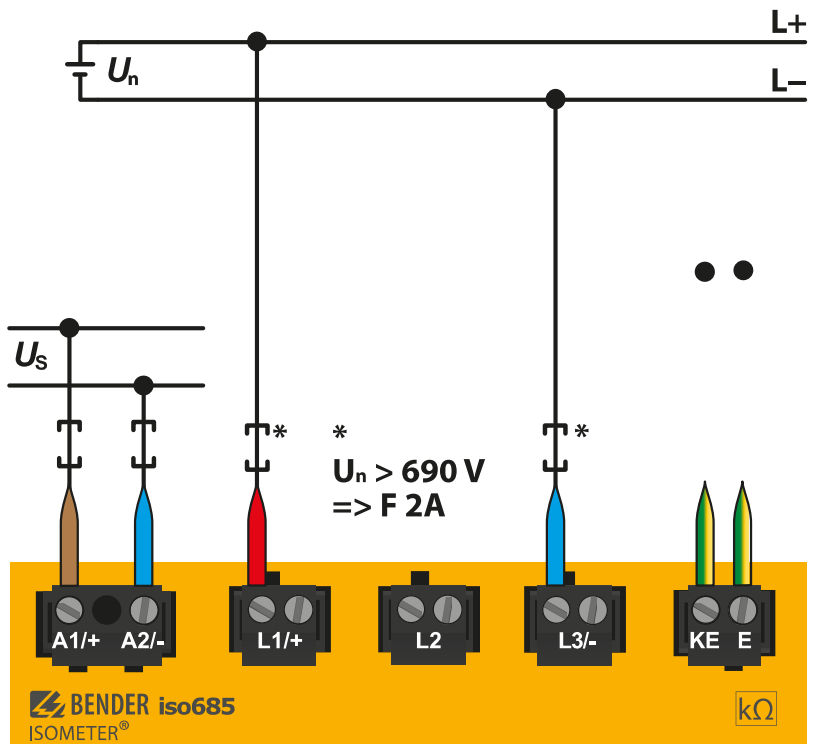

*For systems with a nominal voltage > 690 V and with overvoltage category III, a fuse for the connection to the system to be monitored must be provided. * 2A fuses are recommended.*

6.5 Connection to the supply voltage

CAUTION

Danger of damage to property due to faulty connections!
The device can be damaged if the unit is simultaneously connected to the supply voltage via the X1 interface and A1/+, A2/- terminals.
Do not connect the device simultaneously via X1, and A1/+, A2/- to different supply voltages.

External power supply used to power the ISOMETER® via terminal X1 must fulfil the noise emission and immunity standards of the required application. For wiring longer than 1 m, shielded cables must be used.

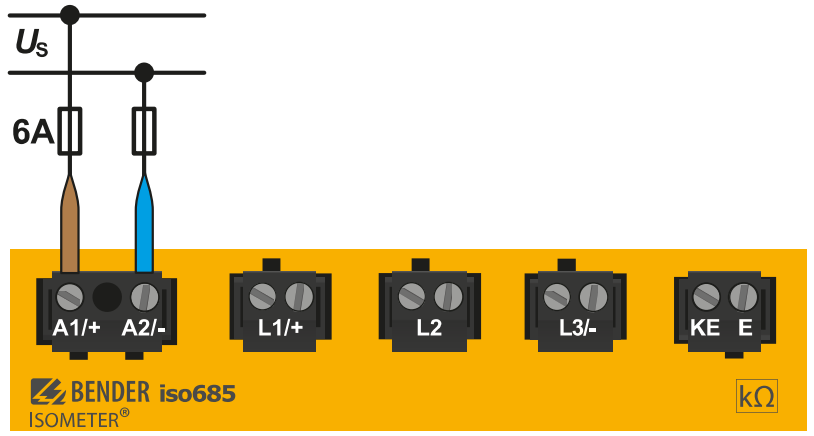

6.6 Connection to the X1 inteface



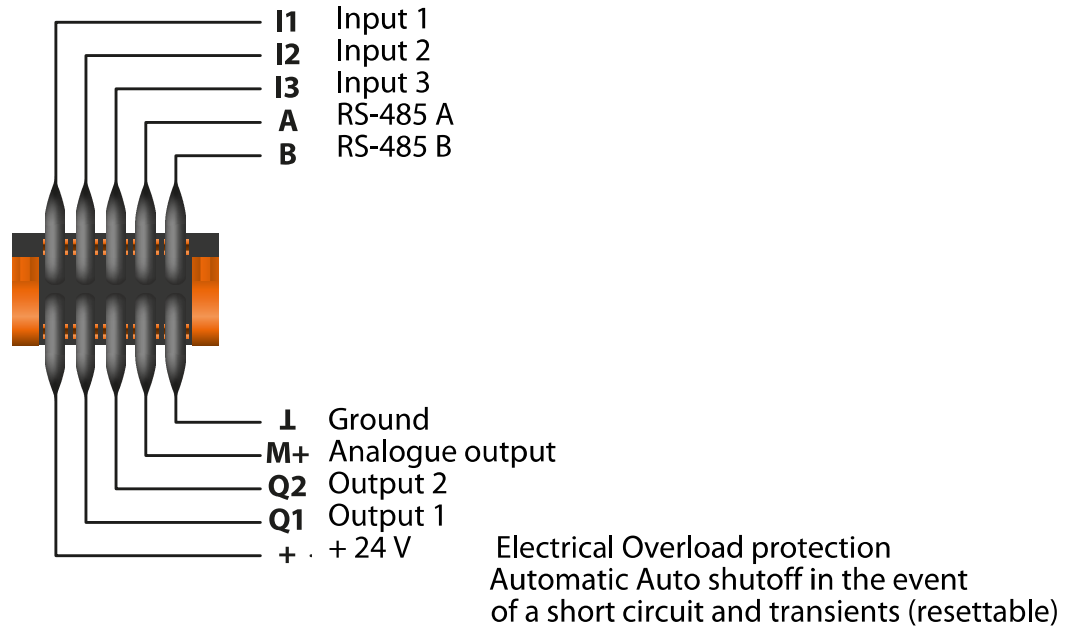

6.7 Connection to the Ethernet interface ETH

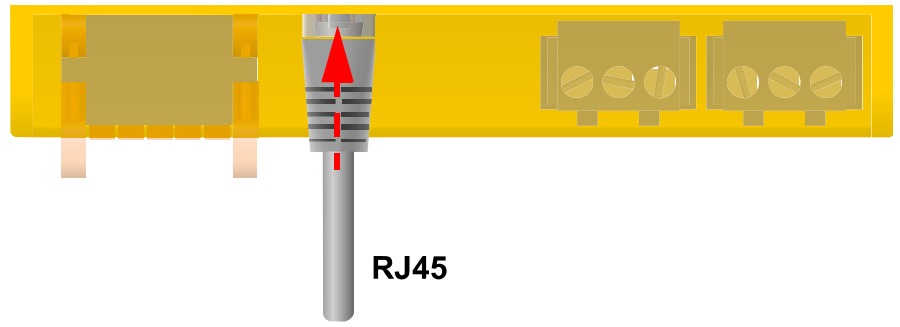

Connect to other ISOMETER®s with a RJ45 plug or network several ISOMETER®

6.8 Connection to relay interfaces 1 and 2

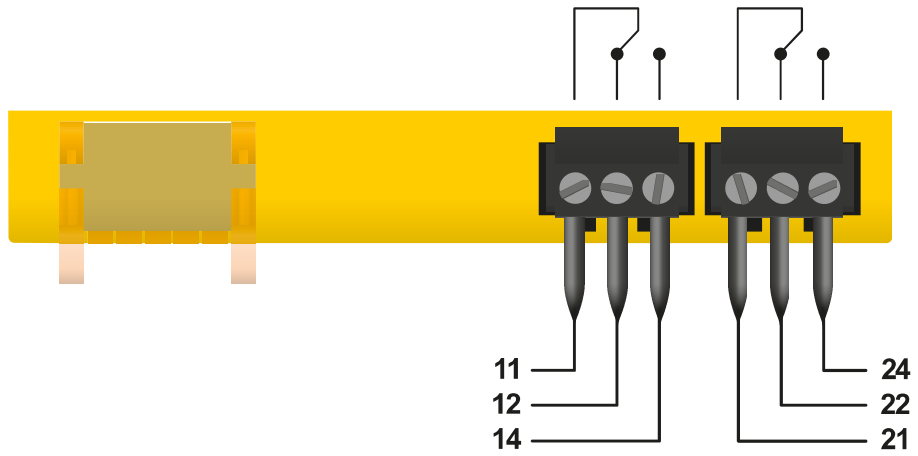

Relay **1**	**1**1 Common contact	**1**2 Normally open (N/O)	**1**4 Normally closed (N/C)
Relay **2**	**2**1 Common contact	**2**2 Normally open (N/O)	**2**4 Normally closed (N/C)

6.9 Position the terminal covers and click it into place

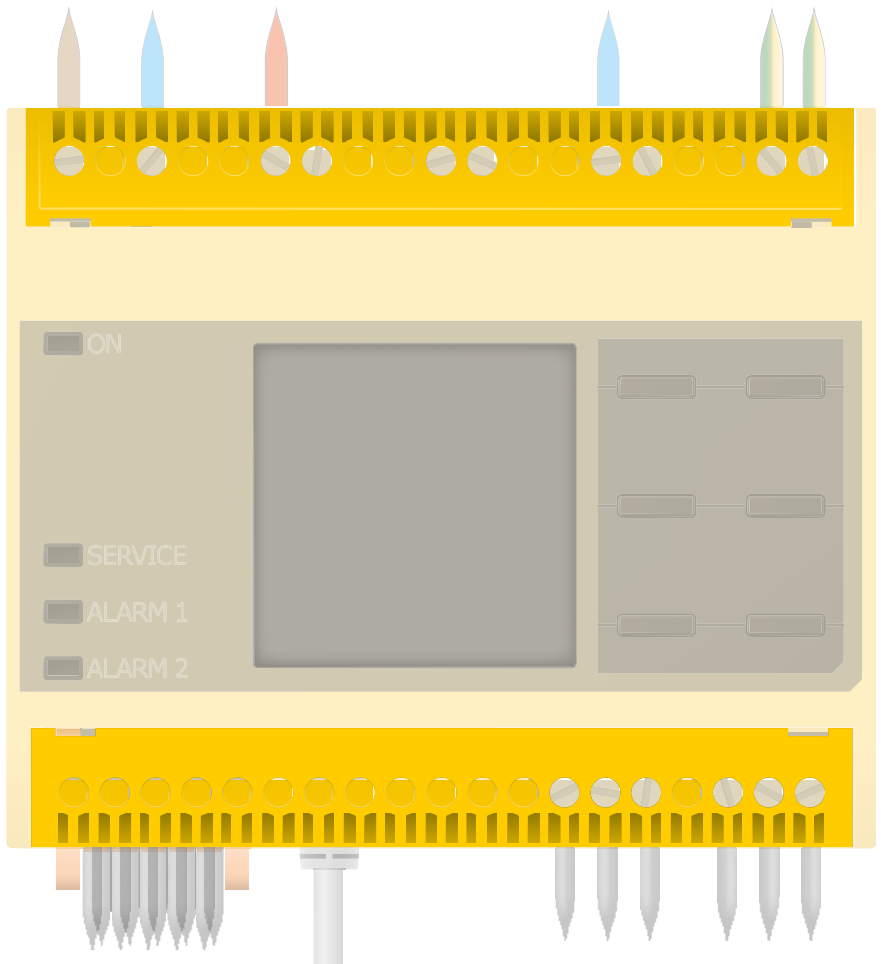

7.1 General initial commissioning process

1. Check that the ISOMETER® is properly connected to the system to be monitored.
2. Connect the supply voltage to the ISOMETER®. Adjust the device using the commissioning wizard. Afterwards, the ISOMETER® performs a self test in four steps. The alarm relays are not checked during this test. After completion of the test, the measured insulation resistance is shown on the display. If the value exceeds the response values indicated in the lowest line of the display, the message "OK" will additionally be displayed.

For customer-specific configured devices, the commissioning wizard might be deactivated and cannot be run. In this case, the device is preset. However, the commissioning wizard can be started as described at "Recommissioning" on page 25.

3. Check the ISOMETER® in the system being monitored, e.g. using a suitable resistance to earth.

Observe the device status!
The device is in the alarm state until initial commissioning has been complete.

After setting the response value R_{an2} for Alarm 2, the device starts a self-test, makes the first measurement and outputs the measured insulation resistance values of the IT system being monitored, then commissioning is completed.

Commissioning procedure - steps for commissioning

Step	ISOMETER® commissioning
1.	Connect the device according to the wiring diagram and device documentation
2.	Connect the supply voltage
3.	Connect the mains voltage
4.	Run through commissioning wizard
5.	The ISOMETER® performs a self test
6.	Execute a function test with a suitable resistance between the system and earth. Resistance value: 50 % of the response value
7.	Remove the resistance
8.	Adjust the basic settings if necessary
9.	The ISOMETER® is properly connected and functions reliably

7.2 Initial commissioning

Check network function!
When the device has been integrated into a network, the impact on the network has to be checked with the device switched on and off.

Follow the instructions of the commissioning wizard on the display.

7.2.1 Set language

The language selected here will be used in the menu and for device messages.

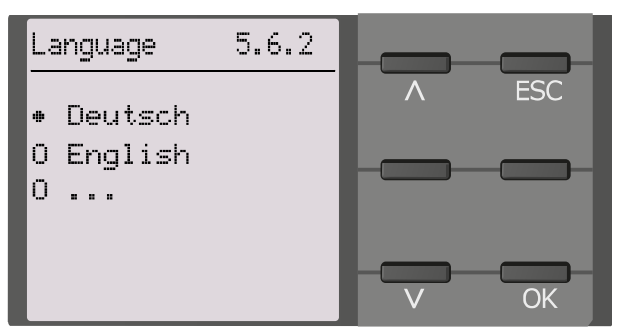

Commissioning

7.2.2 Set time and date

Alarm messages in the history memory and the insulation resistance value over time can only be assigned correctly to the isoGraph when the date and time are set correctly.

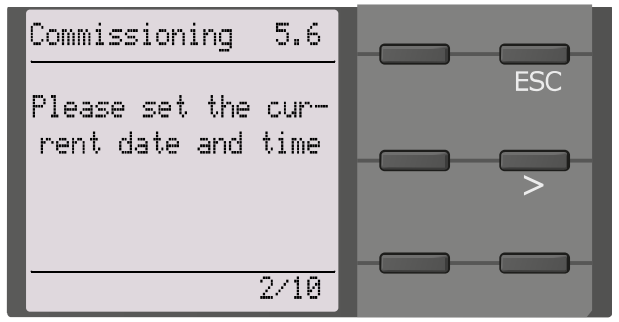

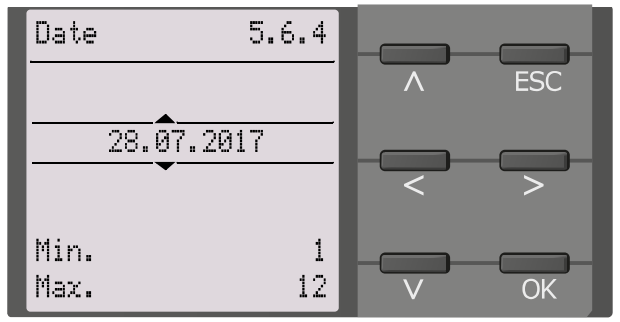

7.2.3 Set system type

By setting the system type the insulation monitoring device can be optimally adapted to the system to be monitored. The system type is essential information for the insulation monitoring device in order to determine the insulation resistance correctly.

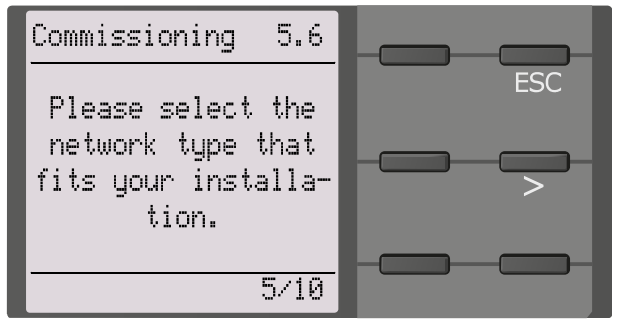

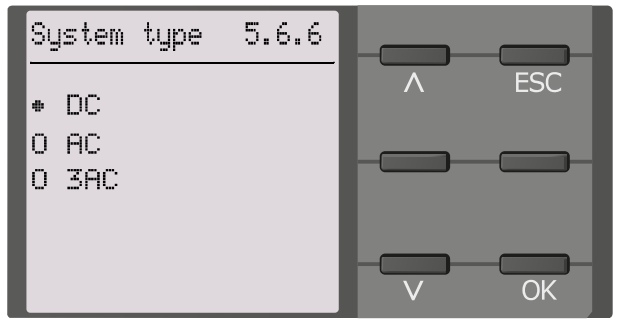

7.2.4 Select a coupling device

A coupling device connected to the insulation monitoring device (to increase the nominal system voltage) must be programmed here. The measurement of the insulation resistance takes into account the parameters of the connected coupling device. If no coupling device is available, press OK.

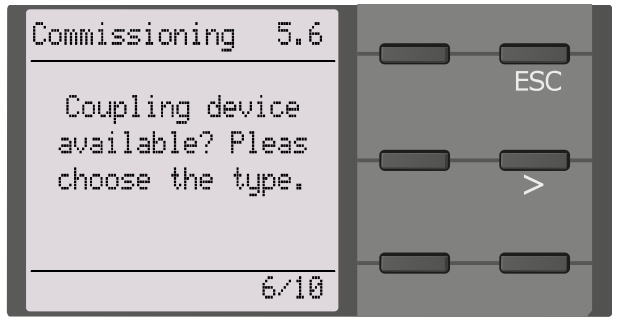

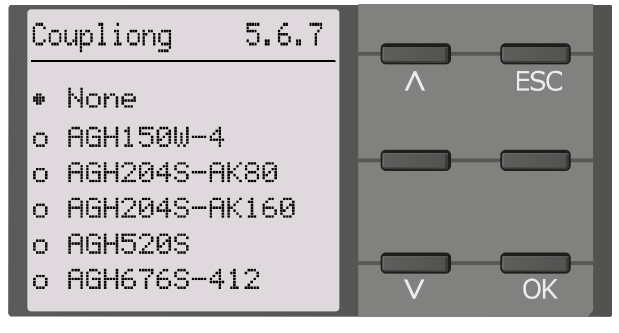

7.2.5 Set profile

In order to optimally adapt the insulation monitoring device to the system to be monitored, select a profile here that suits your system. For an overview of the profiles, refer to Page 44. The profile "power circuits" is suitable for most IT systems.

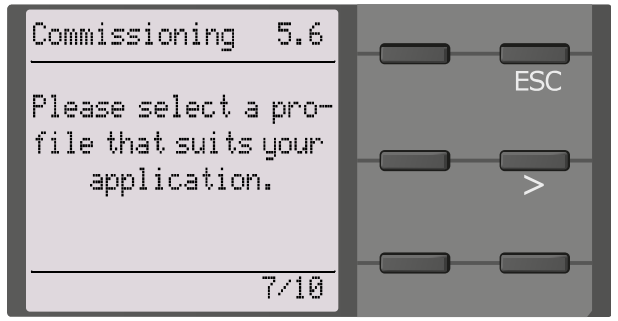

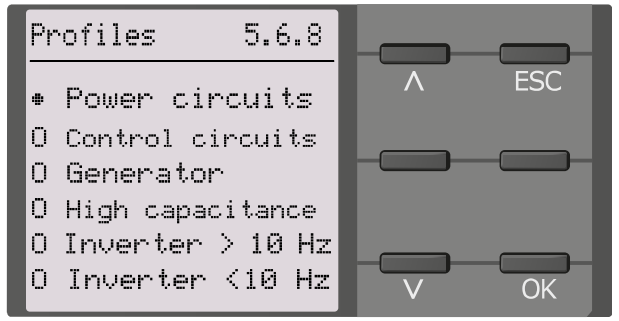

7.2.6 Set response value R_{an1} for Alarm 1

You can set the prewarning response value here. A value of 100 Ω/V is recommended for the prewarning.

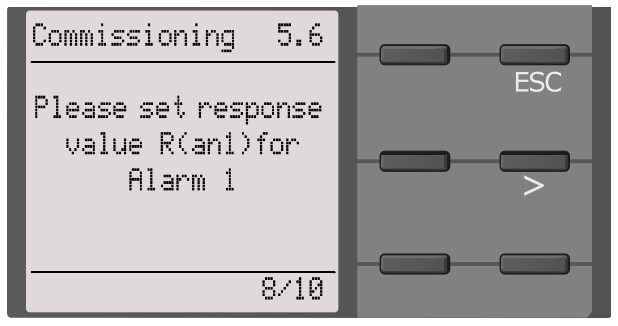

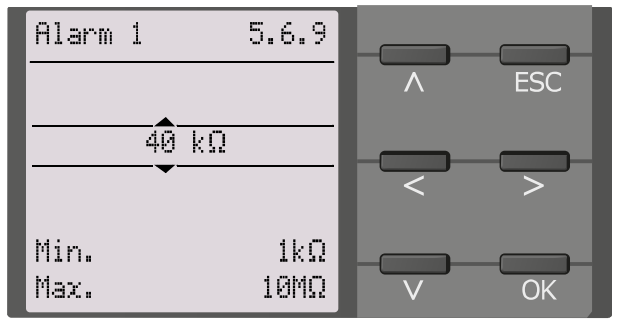

7.2.7 Set response value R_{an2} for Alarm 2

The response value for the main alarm can be set here.A value of 50 Ω/V is recommended for the main alarm.

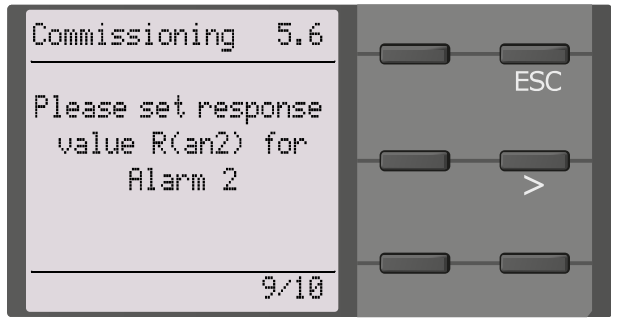

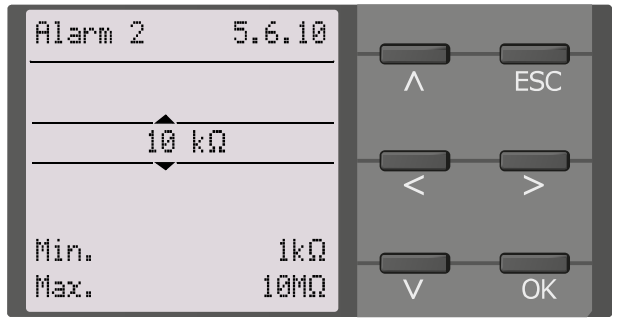

Commissioning

7.3 Recommissioning

If the device has already been put into operation once, the self test will be carried out shortly after connecting the supply voltage. The commissioning wizard will not restart. The commissioning-assistent wizard can be manually started using the menu path:

Menu/Device settings/Commissioning

This menu can be used to modify settings made previously.

Observe the device status!
Once initial commissioning has been completed and the initial measurement has been taken, the device changes from the alarm state to normal state by adhering to the set response values.

8.1 Standarddisplay

In normal operation, the ISOMETER® displays the message OK and below the latest measured insulation resistance.

	The signal quality of the measurement suits the selected profile. The better the signal quality, the faster and more exact the device can measure.
	The signal quality of the measurement does not suit the selected profile. Select a different measurement method.
	Update period between the measuring pulses

In the bottom line of the display, the set threshold values for R(an) are shown. In the example below, R_{an1}=40 kΩ und R_{an2}=10 kΩ.

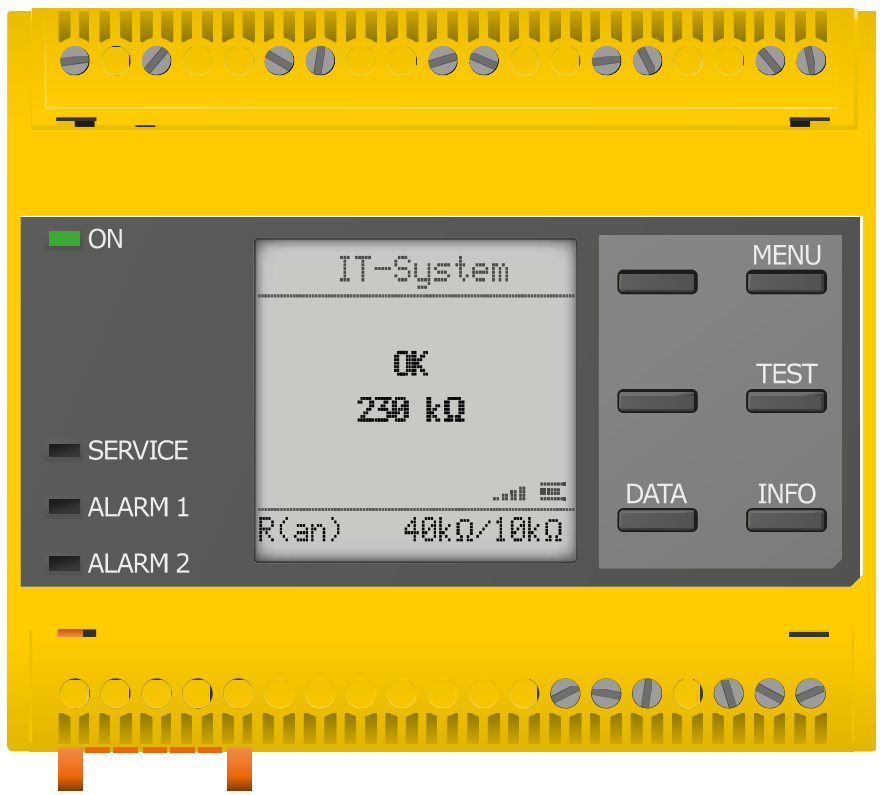

8.2 Fault display (active)

An active fault is displayed by ⚠.
The upper part of the display becomes orange and displays the fault message.

Depending on the type of fault, the LEDs ALARM 1, ALARM 2 or SERVICE are activated.

In the following example, the resistance is detected. Since the values R_{an1}=100 kΩ and R_{an2}=20 kΩ are both below the set response value, ALARM 1 and ALARM 2 are triggered.

If several fault messages occur, you can navigate through the faults using the V and Λ buttons.

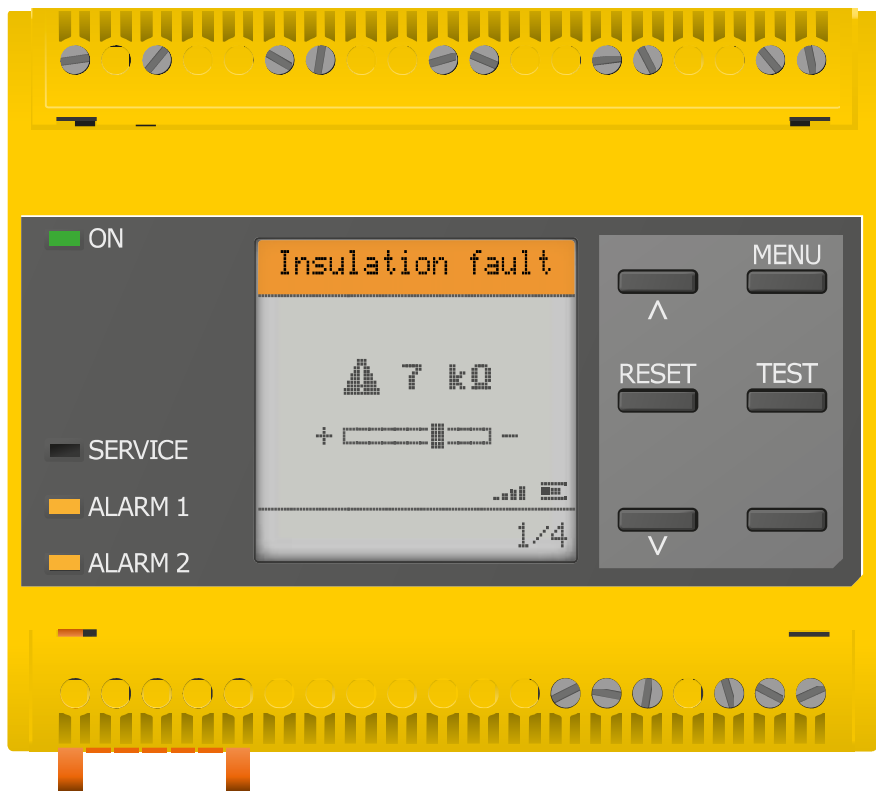

If the value falls below R_{an1} in a DC system or a DC shift is recognised in an AC system, then the additional information regarding the DC shift will be displayed, as illustrated above.

8.3 Fault display (inactive)

An inactive fault is displayed by ⓘ. If several faults have occurred, the number of faults will also be indicated.

This message means that there has been a fault in the past but the device is no longer in the fault condition.



Device keypad
1 View previous fault message
2 MENU - Selection
3 Acknowledge fault
4 Carry out test measurement manually
5 View next fault message
Display
6 Number of faults occured and faults
7 Signal quality and measuring pulse
8 Number of the selected fault/Number of fault messages

If several fault messages occur, you can navigate through the faults using the V and Λ buttons. In addition to the type of fault and the associated alarm value, you can see when the fault has occurred and how long it has been active.

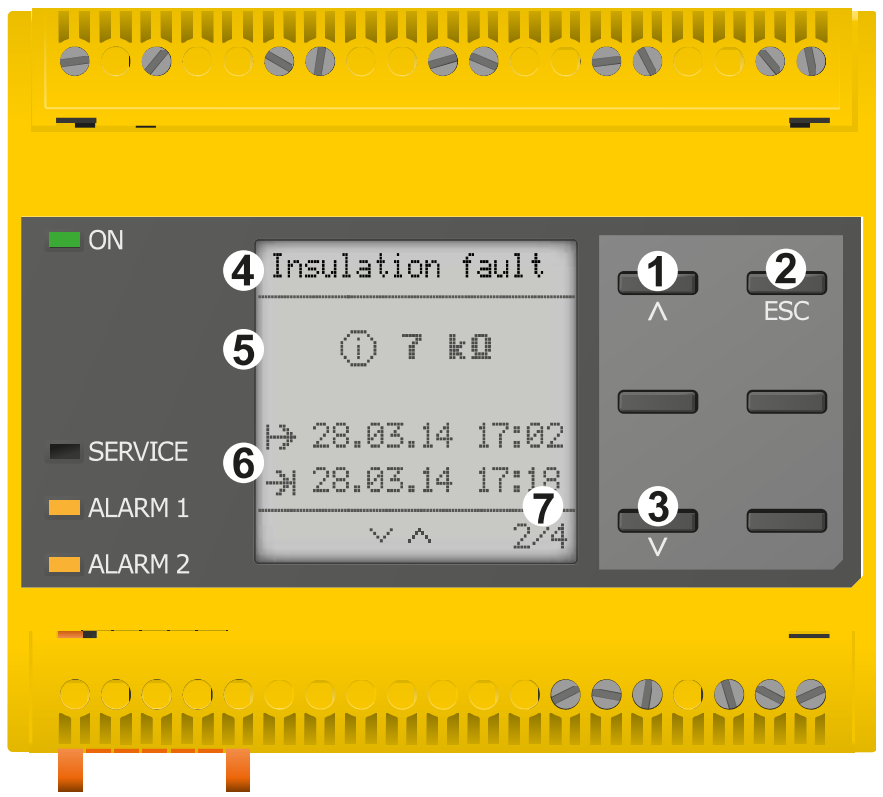

Device keypad
1 View previous fault message
2 Exit view
3 View next fault message
Display
4 Fault description
5 Alarm vaue
6 Fault occurance/Fault resolution
7 Number of the selected fault/Number of fault messages

8.4 Acknowledging a fault message

In order to acknowledge the fault message and return to the ISOMETER®'s standard display, all faults must be acknowledged by means of the reset button .

This means that fault messages can only be reset when the cause of the fault has been eliminated.

Press the reset button, then > and OK to clear the fault memory. The ISOMETER® then returns to the standard display.



Device keypad

1 Press RESET button

2 Select RESET with >

3 „OK“ button to confirm Reset

Display

4 Function - Display

8.5 Data-isoGraph

The isoGraph represents the chronological sequence of the insulation resistance over time. This graphical representation can be displayed over the following time periods: hour, day, week, month and year.

The measured values for individual representations are stored in a separate memory. Up to 100 measured values are available to represent each graph and the resolution of each graph is determined by these values.

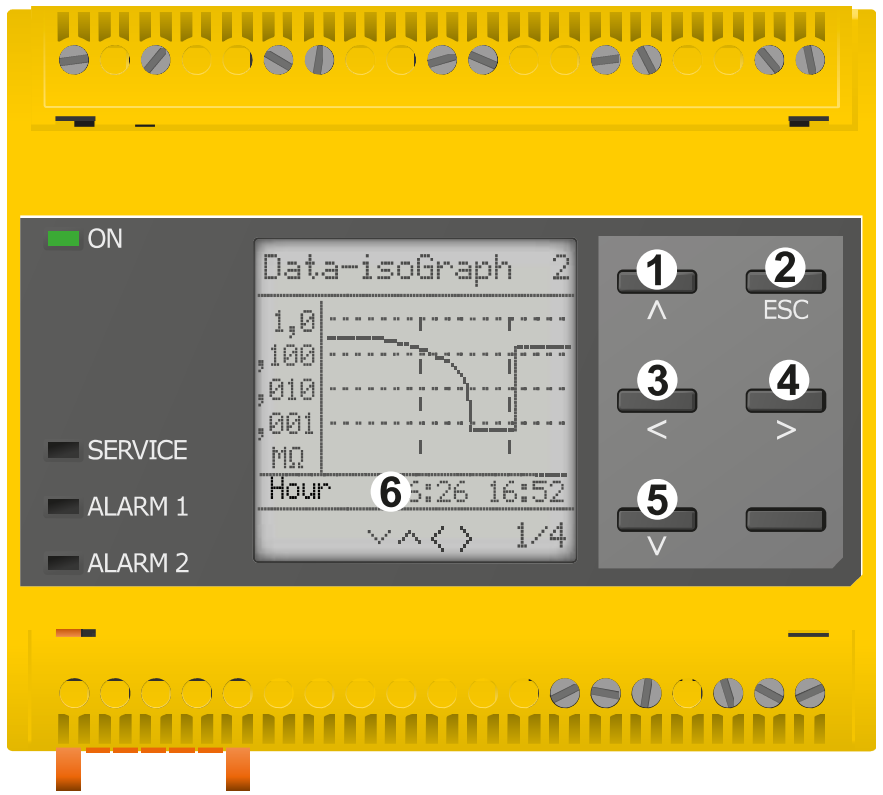

Device keypad

1 Change measured value (previous values)

2 Exit view

3 Change scale (detail)

4 Change scale (overview)

5 Change measured value (next values)

Display

6 Current timescale

8.6 History memory

Up to 1023 alarm messages and device errors are stored in the history memory with date and time stamp. When the history memory is deleted, the minimum insulation resistance R_{min} will also be reset under Menu/ Data Measured values - Data insulation - Reset.



Device keypad

1 View previous message
2 Exit view
3 View next message

Display

4 Fault description
5 Alarm vaue
6 Fault occurance/Fault resolution
7 Number of the selected fault/Number of fault messages

8.7 Initial measurement

During the initial measurement, the device records all measured values.

All measured values that may have been recorded before will be discarded if a new initial measurement is started.

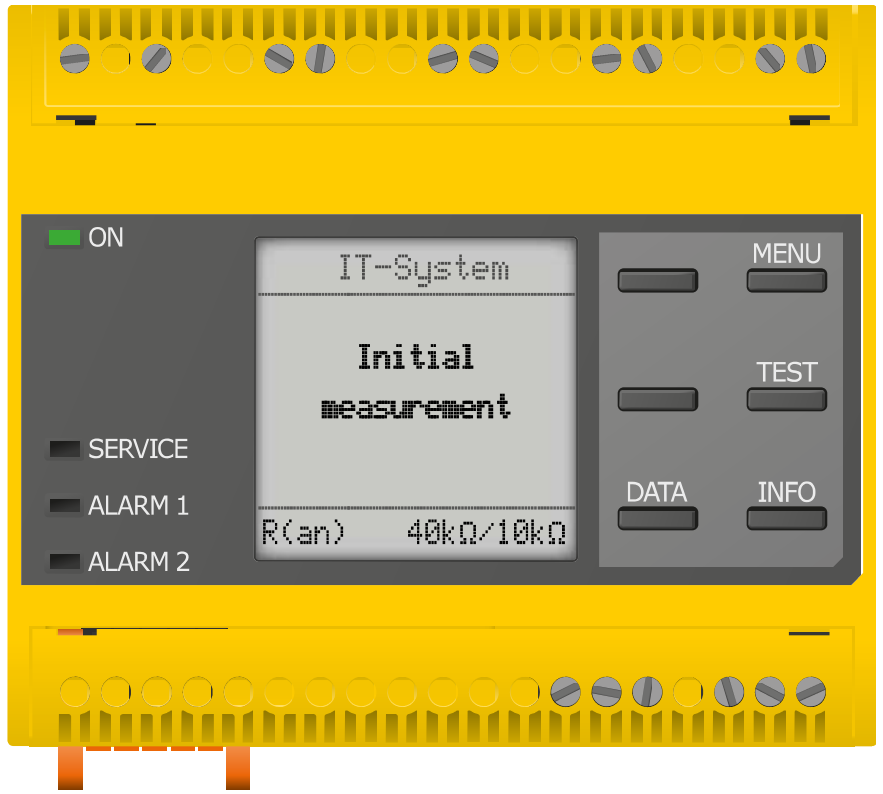

9. Menu structure

- 1. Alarm settings
  - 1. Insulation alarm
    - 1. Alarm 1
    - 2. Alarm 2
    - 3. Memory
  - 2. DC Alarm
    - 1. Alarm
    - 2. U(DC-E)
  - 3. Profile
  - 4. System type
  - 5. Coupling
  - 6. Device
  - 7. t(start)
  - 8. Coupling monitoring
  - 9. Inputs
    - 1. Digital 1
      - 1. Mode
      - 2. t(on)
      - 3. t(off)
      - 4. Function
    - 2. Digital 2
      - 1. Mode
      - 2. t(on)
      - 3. t(off)
      - 4. Function
    - 3. Digital 3
      - 1. Mode
      - 2. t(on)
      - 3. t(off)
      - 4. Function
  - 10 Ausgänge
    - 1. Relais 1
      - 1. Test
      - 2. Relay mode
      - 3. Function 1
      - 4. Function 2
      - 5. Function 3
    - 2. Relais 2
      - 1. Test
      - 2. Relay mode
      - 3. Function 1
      - 4. Function 2
      - 5. Function 3
    - 3. Digital 1
      - 1. Test
      - 2. Relay mode
      - 3. Function 1
      - 4. Function 2
      - 5. Function 3
    - 4. Digital 2
      - 1. Test
      - 2. Relay mode
      - 3. Function 1
      - 4. Function 2
      - 5. Function 3
    - 5. Summer
      - 1. Test
      - 2. Function 1
      - 3. Function 2
      - 4. Function 3
    - 6. Analog
      - 1. Mode
      - 2. Midscale
      - 3. TEST
      - 4. Function
- 2. Data meas. values
- 3. Control
- 4. History
- 5. Device settings
  - 1. Language
  - 2. Clock
    - 1. Time
    - 2. Format
    - 3. Summer time
    - 4. Date
    - 5. Format
    - 6. NTP
    - 7. NTP Server
    - 8. UTC
  - 3. Interface
    - 1. Write access
    - 2. Ethernet
      - 1. DHCP
      - 2. IP
      - 3. SN
      - 4. Std. GW
      - 5. DNS Server
      - 6. Domäne
    - 3. BCOM
      - 1. System name
      - 2. Subsystem
      - 3. Device address
      - 4. Timeout
      - 5. TTL for subsription
    - 4. Modbus TCP
      - 1. Port 502
    - 5. BS-Bus
      - 1. Address
  - 4. Display
    - 1. Brightness
  - 5. Passwort
    - 1. Passwort
    - 2. Status
  - 6. Commissioning
  - 7. Backup
  - 8. Service
- 6. Info

Menu items coloured RED

After activating password protection, access to the menu items coloured RED is only possible after entering a password.

10.1 Settings in the device menu

Representation of the menu items in the chapter headings
The ISOMETER® settings will be explained in the order corresponding to the device menu. In the following headings in this chapter, the information contained in brackets corresponds to the menu structure shown on the previous page.

10.1 (1.0) Alarm settings

The threshold values for the insulation resistances of Alarm 1 and Alarm 2 can be specified in the alarm settings menu and can be adapted to the ISOMETER® user profile. A device password is required for entering the settings. You can adjust the following functions:

10.1 (1.1) Insulation alarm

In the "Insulation alarm" menu, you can set the thresholds for the ISOMETER® Alarm 1 and Alarm 2.

Activation or deactivation of the two alarm levels R_{an1} (Alarm 1) and R_{an2} (Alarm 2) are illustrated in the following graphic:

An alarm will become inactive as soon as the hysteresis of the set operating value is exceeded.

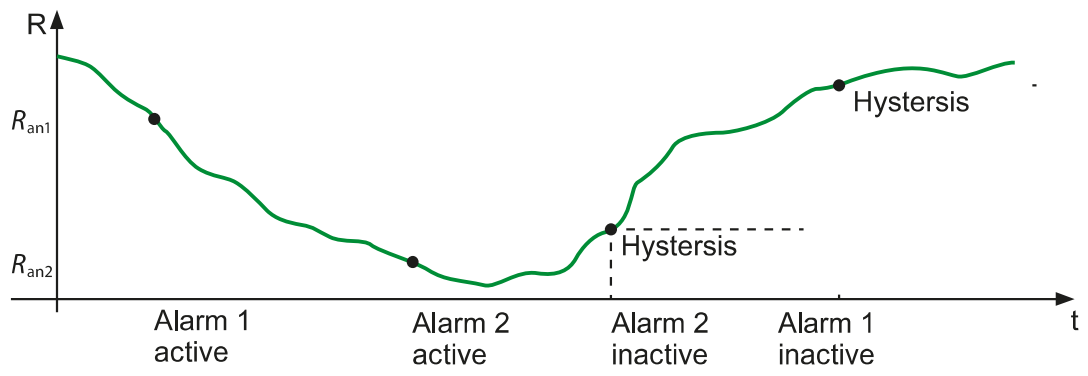

10.1 (1.1.1) Alarm 1

For Alarm 1, an insulation resistance of 1 kΩ…10 MΩ can be set irrespective of Alarm 2.

10.1 (1.1.2) Alarm 2

For Alarm 2, an insulation resistance of 1 kΩ…10 MΩ can be set irrespective of Alarm 1.

10.1 (1.1.3) Fault memory

Automatic reset of inactive faults at the outputs of relay 1, relay 2, digital output 1, digital output 2:

•on	If a fault becomes inactive, the programmed outputs remain in fault condition until they are manually reset.
•off	If a fault becomes inactive, the programmed outputs automatically change the state.

10.1 (1.2) DC alarm

The DC alarm is triggered in the event of a DC offset voltage (U_{DC-E}) in the system.

10.1 (1.2.1) Alarm

•on	The DC alarm is triggered in the event of a DC offset voltage.
•off	The DC alarm is NOT triggered in the event of a DC offset voltage.

10.1 (1.2.2) U(DC-E)

Set the DC alarm to a value between 20 V and 1 kV.

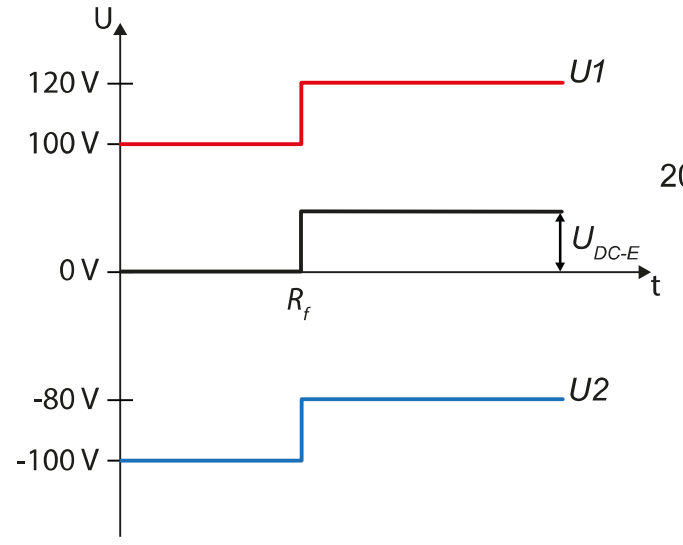

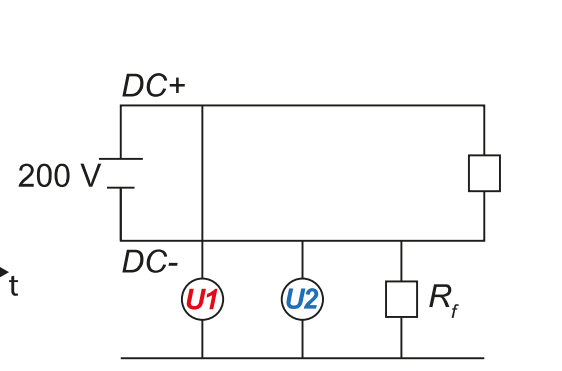

$U_{DC-E}=(U_1+U_2)/2=(120\ V\text{-}80\ V)/2=20\ V$

10.1 (1.3) Profile

Adapt the applicabilty of the ISOMETER® to your system profile. For a description of the profiles refer to "Device profiles" on page 44.
The following may be selected:

*Power circuits	Suitable for most IT systems.
*Control circuits	Not recommended for voltages >230 V.
*Generator	Fast measuring times, fast fault location possible.
*High capacitance	Suitable for systems with a high leakage capacitance.
*Inverter > 10 Hz	Suitable for systems with a dynamic frequency control by means of an inverter in the range 10…460 Hz.
*Inverter <10 Hz	Suitable for systems with very low frequency control in the range 0.1…460 Hz.
*Customer specific	Allows Bender service to make customer-specific settings

10.1 (1.4) System type

Adapt the ISOMETER® to the IT system to be monitored. The following may be selected:

*DC	DC system (refer to "Connection to a DC system" on page 20
*AC	Single-phase AC system (refer to "Connection to an AC system" on page 20)
*3AC	3AC system (refer to "Connection to a 3(N)AC system" on page 19)

10.1 (1.5) Coupling

Adapt the ISOMETER® to the requirements of Bender coupling devices. For a description about the connection of coupling devices refer to "Coupling devices" on page 45. You may select.

- *None
- *AGH150W
- *AGH204S-AK80
- *AGH204S-AK160
- *AGH520S
- *AGH676S-4

10.1 (1.6) Device

Set the ISOMETER® insulation resistance measurement function to active or inactive:

*Active	The device is active.
*Inactive	The device DOES NOT measure the insulation resistance, the message Device inactive appears on the display. The IT system is NOT being monitored!

10.1 (1.7) t(Start)

The ISOMETER® can be operated with a startup delay of 0…120 seconds. The startup is delayed until the first measurement takes place.

10.1 (1.8) Coupling monitoring

The ISOMETER® continuously monitors the coupling of energised systems. The coupling of deenergised systems is monitored at 8 hour intervals. This monitoring function can be activated or deactivated.

*on	Coupling monitoring is activated.
*off	Coupling monitoring is deactivated.

10.1 (1.9) Inputs

The ISOMETER® provides a total of three digital inputs.

The exemplary wiring diagram shows how the digital inputs can be wired:

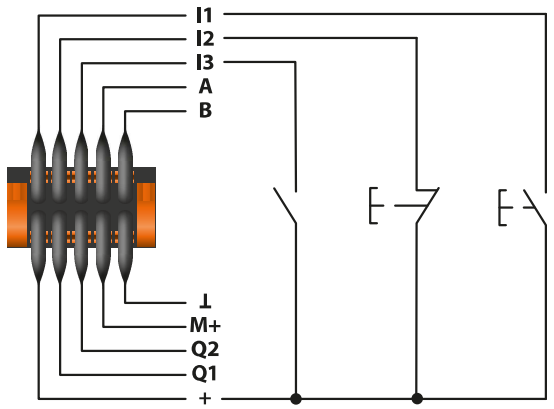

Settings

10.1 (1.9.1) Digital 1

The following parameters can be set for the digital input:

10.1 (1.9.1.1) Mode

The operating mode for the digital input can be set to the following values:

*Active high — An event is executed on the rising edge of the digital input (low to high). Response time t(on) / t(off) after a switch-on signal.

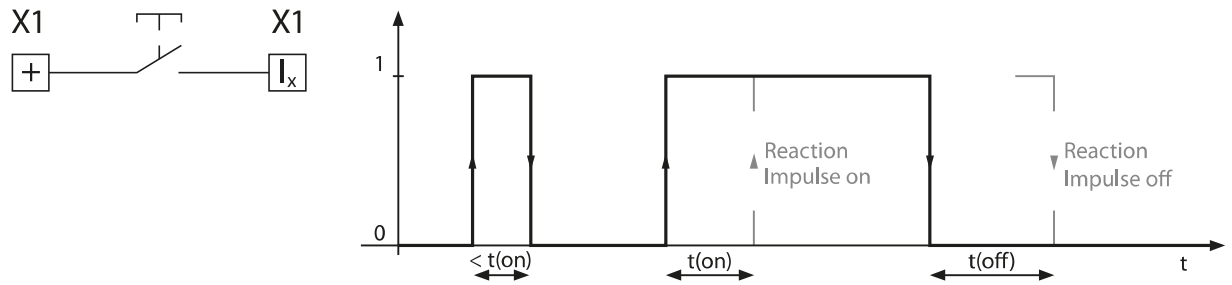

*Active low — An event is carried out on the falling edge of the digital input (high to low). Response time t(on) / t(off) after a switch-off signal.

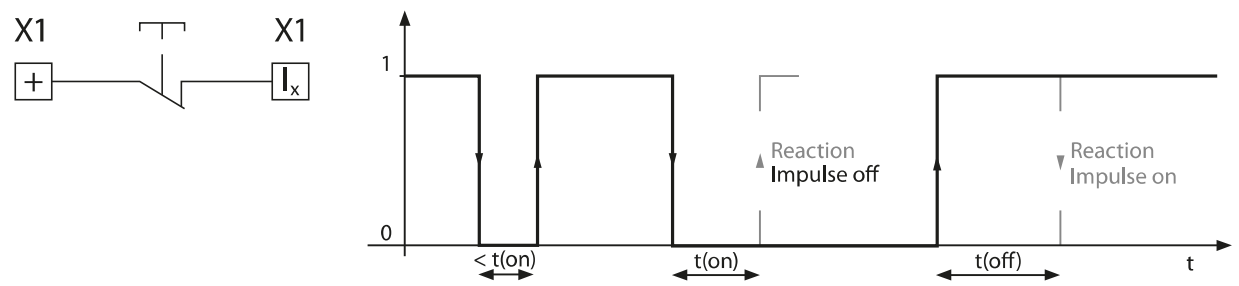

10.1 (1.9.1.2) t(on)

The response time t(on) after a switch-on signal can be set between 100 milliseconds and 300 seconds (refer to "10.1 (1.9.1.1) Mode").

10.1 (1.9.1.3) t(off)

The response time t(off) after a switch-off signal can be set between 100 milliseconds and 300 seconds (refer to "10.1 (1.9.1.1) Mode").

10.1 (1.9.1.4) Function

The ISOMETER® digital input functions can be configured differently:

*off	Digital input without function
*TEST	Device self test
*RESET	Reset of fault and alarm messages
*Deactivate device	The device DOES NOT measure the insulation resistance, the message Device inactive appears on the display. The IT system is NOT being monitored!
*Start initial measurement	All recorded measurements are discarded and a new measurement will be started

10.1 (1.9.2) Digital 2

Refer to "10.1 (1.9.1) Digital 1".

10.1 (1.9.3) Digital 3

Refer to "10.1 (1.9.1) Digital 1".

Deactivating the ISOMETER® via the digital inputs

The digital inputs are not coupled to each other. To avoid accidental and unintended deactivation of the ISOMETER®, care must be taken during configuration to ensure that the inputs are assigned different functions.

10.1 (1.10) Outputs

The ISOMETER® provides a total of six outputs:
The following parameters can be set for the outputs:

10.1 (1.10.1) Relay 1

The following parameters can be set for each relay:

10.1 (1.10.1.1) TEST

The functional test of the relay can be activated or deactivated. This only applies to the manual test and not to the periodic device self test:

*on	The manual test checks the relay's switching function
*off	The manual test does not check the relay's switching function

10.1 (1.10.1.2) Relay mode

The relay mode can be adapted to the application:

*N/C	Normally closed- N/C operation contacts11-12-14 / 21-22-24 (in fault-free condition, the alarm relay is energised).
*N/O	Normally opened - N/O operation contacts 11-12-14 / 21-22-24 (in fault-free condition, the alarm relay is de-energised).

10.1 (1.10.1.3) Function 1

Three functions can be assigned to one output. The functions are linked to an OR operator:

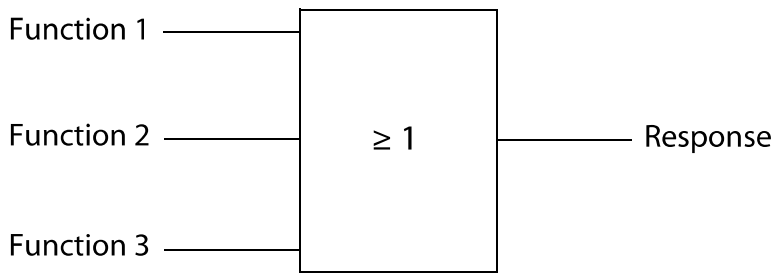

Select the appropriate setting for function 1. The following parameters can be set.

*off	The function is not used.
*Ins. Alarm 1	The status of the output changes when the value falls below the set response value R_{an1}.
*Ins. Alarm 2	The status of the output changes when the value falls below the set response value R_{an2}.
*Connection fault	The status of the output changes when one of the following connection fault occurs: • No low-resistance connection between the line conductors. • No low-resistance connection between the terminals E and KE to earth (PE). • The load connected to the current output is too low. • The load connected to the current output is too high. • Load on X1 too high.
*DC- alarm	The status of the output changes in the event of an earth fault in the direction of DC when 75% of the value is exceeded. This does not concern symmetrical faults. This function will only be carried out when the value falls below the response value R_{an1} and when the nominal system voltage is U_n ≥50 V.
*DC+ alarm	The status of the output changes in case of an earth fault in the direction of DC+ when 25% of the value are exceeded. This does not concern symmetrical faults. This function will only be carried out when the value falls below the response value R_{an1} and when the nominal system voltage is U_n ≥50 V.
*Symmetrical alarm	The status of the output changes in the event of a resistance ratio between DC+ and DC- of 25 % to 75 %.

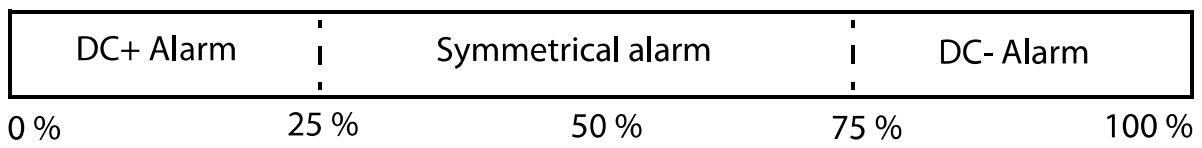

*Device fault	The status of the output changes in the event of an internal device error.
*Common alarm	The status of the output changes on the occurrence of any alarm and fault messages (Ins. Alarm 1 & 2, DC–/DC+ alarm, symmetrical alarm, connection and device errors).
*Measurement ended	The status of the output changes at the end of the initial measurement.
*Device inactive	The status of the output changes when the device has been deactivated via a digital input or the control menu.
*DC offset alarm	The status of the output changes on the occurrence of a DC offset voltage in the system.

10.1 (1.10.1.4) Function 2

Refer to "10.1 (1.10.1.3) Function 1".

10.1 (1.10.1.5) Function 3

Refer to "10.1 (1.10.1.3) Function 1".

10.1 (1.10.2) Relay 2

Refer to "10.1 (1.10.1) Relay 1".

10.1 (1.10.3) Digital 1

The following parameters can be set for each of the digital outputs:

10.1 (1.10.3.1) TEST

The functional test of the digital output can be activated or deactivated. This only applies to the manual test and not to the cyclic device self test:

*on	The manual test changes the status of the digital output.
*off	The manual test does not change the status of the digital output.

10.1 (1.10.3.2) Mode

The following settings can be used to set the operating mode for the digital output:

*Active — In the active mode +24 V will be internally applied across the Qx output.

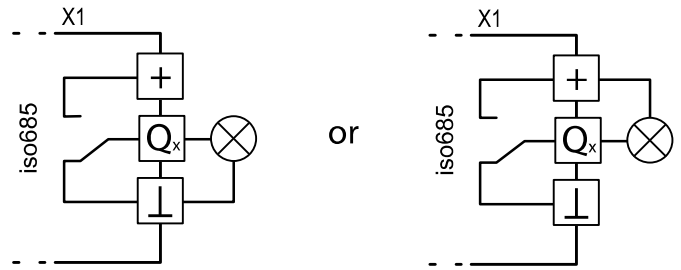

*Passive — In passive mode ≤ 32 V are externally connected (refer to the technical data). The output switches the applied potential to ground.

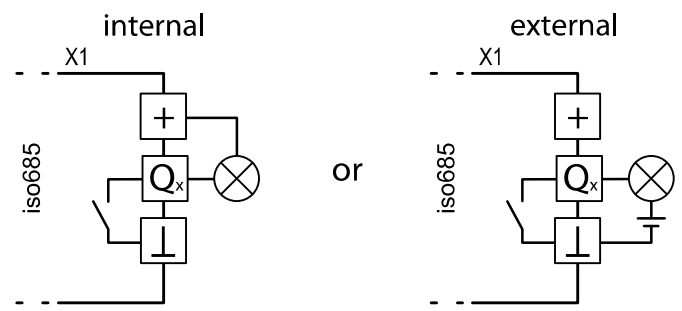

Observe the maximum output current!
Maximum output current in case of internal voltage supply via A1/+ and A2/-: 200 mA in total to X1.
Also refer to the formula, given in the technical data, for calculating I_{LmaxX1}. See "Digital outputs (Q1, Q2)" on page 54.

10.1 (1.10.3.3) Function 1

Refer to "10.1 (1.10.1.3) Function 1".

10.1 (1.10.3.4) Function 2

See "10.1 (1.10.1.3) Function 1"

10.1 (1.10.3.5) Function 3

See "10.1 (1.10.1.3) Function 1"

10.1 (1.10.4) Digital 2

Refer to "10.1 (1.10.3) Digital 1".

10.1 (1.10.5) Buzzer

The following parameters can be set for the buzzer.

10.1 (1.10.5.1) TEST

The functional test of the buzzer can be activated or deactivated. This only applies to the manual test and not to the cyclic device self test:

*on	The manual test activates the buzzer sound.
*off	The manual test does not activate the buzzer sound.

10.1 (1.10.5.2) Function 1

Refer to "10.1 (1.10.1.3) Function 1".

10.1 (1.10.5.3) Function 2

Refer to "10.1 (1.10.1.3) Function 1".

10.1 (1.10.5.4) Function 3

Refer to "10.1 (1.10.1.3) Function 1".

10.1 (1.10.6) Analogue

The following parameters can be set for the analogue output.

10.1 (1.10.6.1) Mode

The operating mode of the analogue output can be set to the following values:

Current output

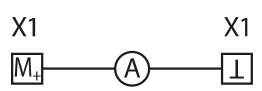

*0-20 mA	Permissible load ≤ 600 Ω
*4-20 mA	Permissible load ≤ 600 Ω
*0-400 µA	Permissible load ≤ 4 kΩ

Voltage output

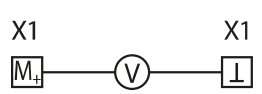

*0-10 V	Permissible load ≥ 1 kΩ
*2-10 V	Permissible load ≥ 1 kΩ

10.1 (1.10.6.2) Midscale

Select the appropriate midscale. The following parameters can be set:

*Linear	The switching signal is linear to the insulation resistance in the indicated measuring range.

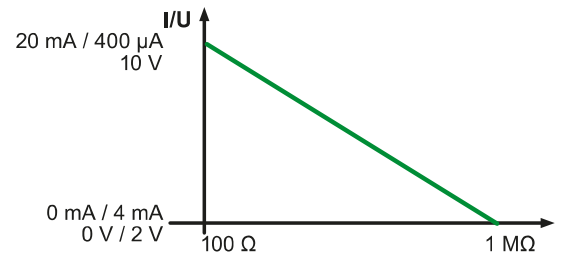

*28 kΩ *120 kΩ	The switching signal is analogue to the midscale of 28 kΩ or 120 kΩ on a measuring instrument.

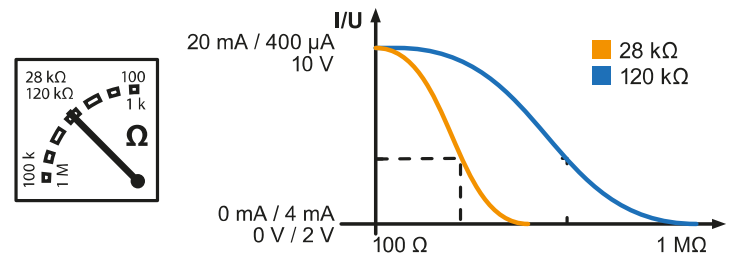

Calculation of the insulation resistance using the analogue output:

$$R_F = \frac{(A_2 - A_1) * R_{SKM}}{A_3 - A_1} - R_{SKM}$$

A_3= Measured value analogue output

R_{SKM}= 28 kΩ or 120 kΩ/midscale

R_F= Insulation fault in kΩ

Lower value Analogue output A_1	Upper value Analogue output A_2
0 mA	20 mA
4 mA	20 mA
0 µA	400 µA
0 V	10 V
2 V	10 V

10.1 (1.10.6.3) TEST

The functional test of the analogue output can be activated or deactivated. In this way, the analogue output is adjusted once for the entire range. This only applies to the manual test and not to the cyclic device self test:

•on	The manual test checks the analogue output function.
•off	The manual test does not check the analogue output function.

10.1 (1.10.6.4) Function

Select the appropriate setting for the analogue output. The following parameters can be set.

•Insulation value	Depending on the measured insulation value, an analogue current or voltage signal is provided at the output.
•DC shift	Depending on the measured DC shift, an analogue current or voltage signal is provided at the output. This setting can only be used when Linear is selected in the menu "Midscale".

DC+ Alarm		Symmetrical alarm		DC- Alarm
0 %	25 %	50 %	75 %	100 %
0 V/2 V				10 V
0 mA/4 mA				20 mA
0 µA				400 µA

10.1 (2.0) Data measured values

The ISOMETER® stores certain measured values for a specific period of time. You can view these data in the "Data meas. value" menu. Navigate through the different views using the Λ and V buttons:

•isoGraph data	Displays the insulation resistance and chronological sequence. Refer to "Data-isoGraph" on page 28.
•Insulation data	Displays the current insulation resistance, the minimum measured insulation resistance and the leakage capacitance.
•IT system data	Displays the system phase-to-phase voltages and the mains frequency (r.m.s. values)
•IT system data	Displays the system phase-to-earth voltages

10.1 (3.0) Control

In the control menu you can start a manual test, reset alarm messages and start an initial measurement:

•TEST	Perform a manual test of the device
•DEVICE	Set the insulation resistance measurement function of the ISOMETER® to active or inactive:
•RESET	Reset of fault and alarm messages
•Start initial measurement	All recorded measurements are discarded and a new measurement will be started

10.1 (4.0) History

In the history menu, the faults detected by the ISOMETER® are displayed. For a detailed function description refer to "History memory" on page 29:

•History	Overview of faults that have occurred.
•Delete	Reset the history memory.

10.1 (5.0) Device settings

The device settings menu allows you to configure the basic settings for the ISOMETER®.

10.1 (5.1) Language

Choose the language to be displayed by the ISOMETER®. For example, you can set the languages:

•Deutsch
•English
•...

10.1 (5.2) Clock

In the clock menu, the time and date display format for the ISOMETER®s can be set:

10.1 (5.2.1) Time

Based on the selected time format you can set the current time to display 24-hour or 12-hour notation (am/pm).

10.1 (5.2.2) Format (time)

Select the appropriate time format to be displayed:

*12 h	12-hour notation am/pm.
*24 h	24-hour notation

10.1 (5.2.3) Summertime

Summer time can be considered in the following settings:

*off	No automatic change between summer time and standard time.
*DST	Daylight Saving Time (DST) Automatic change between summer and standard time according to North American regulation. Begin: Second Sunday in March from 02:00 local time to 03:00 local time End: On the first Sunday in November from 03:00 local time to 02:00 local time
*CEST	Central European Summer Time (CEST) Automatic change between summertime and standard time according to Central European regulation. Begin: Last Sunday in March from 02:00 Uhr CET to 03:00 CEST End: Last Sunday in October from 03:00 Uhr CEST to 02:00 CET

When set to DST or CEST, changing between summer time and normal time is only done on the date of the official time change.

10.1 (5.2.4) Date

Based on the selected date format you can set the current date.

10.1 (5.2.5) Format (date)

Select the appropriate date format you want to be displayed:

*dd.mm.yy	day, month, year
*mm-dd-yy	month, day, year

10.1 (5.2.6) NTP

Select whether you would like to synchronise the current time via NTP. To use this function, configure the NTP server (refer to "NTP server" on page 38).

*on	Synchronisation via NTP server is activated.
*off	Synchronisation via NTP server is deactivated.

10.1 (5.2.7) NTP server

Set the IP address of the NTP server.

10.1 (5.2.8) UTC

Configure the time according to UTC (Coordinated Universal Time) For Germany, set +1 for wintertime (CET) and +2 for summer time (CEST).

10.1 (5.3) Interface

Set the parameters for the connection of other devices to the ISOMETER® in the interface menu:

10.1 (5.3.1) Write access

Decide if the device parameters should be set externally via Modbus or a web server.Displaying and reading data via Modbus and a web server always works, regardless of this setting.

*Allow	Allow external parameter setting.
*Deny	Refuse external parameter setting.

10.1 (5.3.2) Ethernet

Set the parameters for communication with other devices via the Ethernet interface. The Ethernet interface can be used for communication with Modbus, web server and BCOM.

10.1 (5.3.2.1) DHCP

Select whether you want to use automatic address assignment via your DHCP server. If the automatic IP address assignment is enabled, the IP address, the subnet mask and the standard gateway will be automatically assigned. If the automatic IP address assignment is disabled, these settings must be made manually in the menu.

You can view the IP address in the Info menu. (refer to "Info" on page 40).

*on	Activate automatic IP address assignment.
*off	Deactivate automatic IP address assignment.

Settings

10.1 (5.3.2.2) IP (manual configuration)

Set the appropriate IP address for the ISOMETER®. Make sure that the address of the device is within the address range of your network. Contact your network administrator to obtain information on the address range of your network..

10.1 (5.3.2.3) SN (manual configuration)

Set the appropriate subnet mask. (Standard subnet mask: 255.255.255.0) Contact your network administrator to obtain more information.

10.1 (5.3.2.4) Std. GW (manual configuration)

If a standard gateway is used in your network, enter its IP address here. If there is no gateway in the network, enter an address as gateway address that is not yet in use in the address range. **Without setting a standard gateway address, the device cannot be accessed.** Contact your network administrator to obtain information on the configuration of your local network.

10.1 (5.3.2.5) DNS server

If you use a DNS server, enter the server's IP address.

For questions regarding the configuration of a DNS server, please contact your network administrator.

10.1 (5.3.2.6) Domain

Enter the domain name.

For questions regarding the configuration of the domain, please contact your network administrator.

10.1 (5.3.3) BCOM

Set the parameters for communication with other devices via BCOM.

For further information, refer to "BCOM" on page 41.

10.1 (5.3.3.1) System name

Set the system name of the network in which the devices are located. In order to guarantee that all devices are able to communicate via BCOM, all devices must have the same system name.

10.1 (5.3.3.2) Subsystem

Configure the subsystem address of the network in which the devices are located. The devices can communicate with subsystems with the same or different address.

10.1 (5.3.3.3) Device address

Assign a device address. Each device must have a different address to distinguish one device from another in the system and ensure correct communication.

10.1 (5.3.3.4) Timeout

Set a timeout time for messages between 100 ms…10 s.

This time specification defines the maximum permissible time for a device to respond.

10.1 (5.3.3.5) TTL for subscription

Set a time from 1 s…1092 min.

The time indicates in which intervals the ISOMETER® sends messages to a gateway, for example. Essential messages (e.g. insulation alarm or substantial value changes) are always sent immediately.

10.1 (5.3.4) Modbus/TCP

Settings for communication with other devices via Modbus TCP.

For further information, refer to "Modbus/TCP" on page 41.

10.1 (5.3.4.1) Port 502

Choose whether Modbus TCP should be used:

•on	Modbus TCP can be used for communication with other devices.
•off	Modbus TCP cannot be used for communication with other devices.

10.1 (5.3.5) BS-Bus / RS-485

Set the parameters for communication with other devices via the Bender sensor bus.

For further information, refer to "BS bus" on page 43.

10.1 (5.3.5.1) Address

Set the address of the Bender Sensor bus from 1 to 90.

10.1 (5.4) Display

The brightness of the ISOMETER® display can be adjusted in the "Display" menu:

10.1 (5.4.1) Brightness

Adjust the brightness for the display between 0 % and 100 % in steps of 10.

If no key is pressed on the keyboard within a period of 15 minutes, the display brightness is reduced.The original brightness is restored when a key is pressed.

10.1 (5.5) Password

Use the password function to protect the device parameters against unauthorised adjustment. The default password is 0000.

10.1 (5.5.1) Password

Enter an individual four-digit password.

10.1 (5.5.2) Status

Decide if you want to use the password query:

*on	Password query active
*off	Password query inactive

10.1 (5.6) Commissioning

In the commissioning menu you can open the ISOMETER®'s commissioning wizard again.

10.1 (5.7) Backup

In the backup menu device settings can be saved or device settings already saved can be restored.

*Save	The ISOMETER® saves your device settings.
*Restore	The ISOMETER® restores your initial device settings.

10.1 (5.8) Service

*Password	The Service menu can only be accessed by Bender Service staff.

10.1 (6.0) Info

You can view the current ISOMETER® settings in the Info menu. Navigate through the different views using the Λ and V buttons:

*Device	Device name, serial number, article number
*Software	Software version measurement technique, software version HMI
*Measurement technique	Selected profile, selected system type
*Clock	Time, date, summer time
*Ethernet	IP address, DHCP status, MAC address
*BS bus	BS address of the device

11. Device communication

11.1 Ethernet interface

The Ethernet interface can be used for communication with Modbus, web server and BCOM.

11.2 BCOM

BCOM is intended for communication between Bender devices via Ethernet.

In order to guarantee that all devices are able to communicate via BCOM, all devices must have the same system name. Devices can be organised in subsystems. Each device requires an individual device address.

For more information regarding BCOM, refer to the BCOM manual (D00256) at http://www.bender.de/manuals.

When address 0 has been set for the communication via BCOM the device can be accessed via the network (e. g. for parameter setting, etc.) but it cannot communicate with other devices.

11.3 Modbus/TCP

Modbus is an international widely used protocol for data transfer between devices.

All measured values, messages and parameters are stored in virtual register addresses. Data can be read at a specific register address with a read command. With a write command, data can be written to a register address. The register addresses of the individual measured values und parameters can be found in the manual "iso685–D Annex A" with the title "ISOMETER® iso685 device family - Modbus settings" at http://www.bender.de/manuals.

A maximum of 5 TCP/IP connections can be used simultaneously.

In order to be able to parameterise the device externally via Modbus, the menu item "Allow" must have been set in the "Write access" menu (see "Write access" on page 38).

11.4 Web server

The ISOMETER® has an integrated web server, which conveniently displays ISOMETER® data on every PC via a web browser. The web server can be used to read measured values and parameterise the ISOMETER® .

To access the web server, enter the IP address of the ISOMETER® into the web browser. For example:http://192.168.0.5). The ISOMETER® IP address can be found in the "Info" menu (refer to 10.1 (6.0) "Info" on page 40).

The following web browsers should be used:

The web server offers the following functions:

- Visualisation
  - Indication of device information (e.g. device type, software version, etc.)
  - Indication of current device settings.
  - Indication of alarm messages.
  - Indication of the Modbus information of the individual parameters.
  - Indication of the interfaces in use.
  - Overview of the current measured values.
  - Detailed graphic representation of the insulation resistance (isoGraph).
  - Fast and simple visualisation without any programming.
- Parameter setting
  - Easy and fast parameter setting of the device
  - Easy assignment and editing options for devices
- Maintenance
  - Data storage of specific events for fast support by Bender Service.

A maximum of 5 TCP/IP connections can be used simultaneously.

Only one device may access the web server at the same time. If several devices try to access the web server it may result in timeouts.

Write access is deactivated by default in the device menu (= Deny). To set parameters via the web server, write access must first be activated in the device menu (= Allow) (see "Write access" on page 38).

11.4.1 Web server user interface

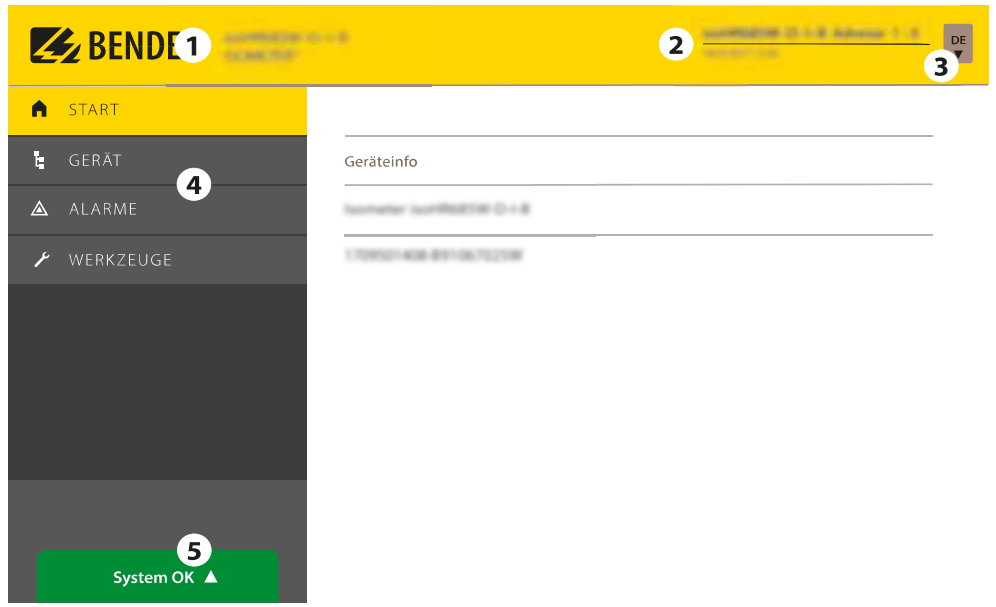

Legend for user interface

1	LOGO	Logo and device identification
2	System information	Device address Date and time when browser system was accessed. The web interface does not show the current time on the ISOMERTER®. Instead, the actual ISOMETER® time can be determined in the Menu **DEVICE -> Settings -> clock**.
3	Language	Changing the language settings
4	Main menu	Main menu of the web server (first level) • START (1) • DEVICE (2) • ALARMS (3) • TOOLS (4)
5	System message:	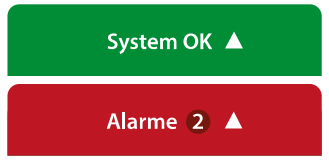 If there are pending alarms, click on the red button or go to menu point "ALARMS" (3) to obtain further information.

11.4.2 Web server device menu (first level)

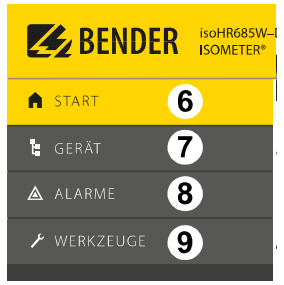

Legend for web server device menu (first level)

6	START	Indication of general device information.
7	DEVICE	Indication of an overview of alarm values and measured values. Display and changing the settings.
8	ALARMS	Indication of alarm messages.
9	TOOLS	

11.4.3 Webserver submenu tool

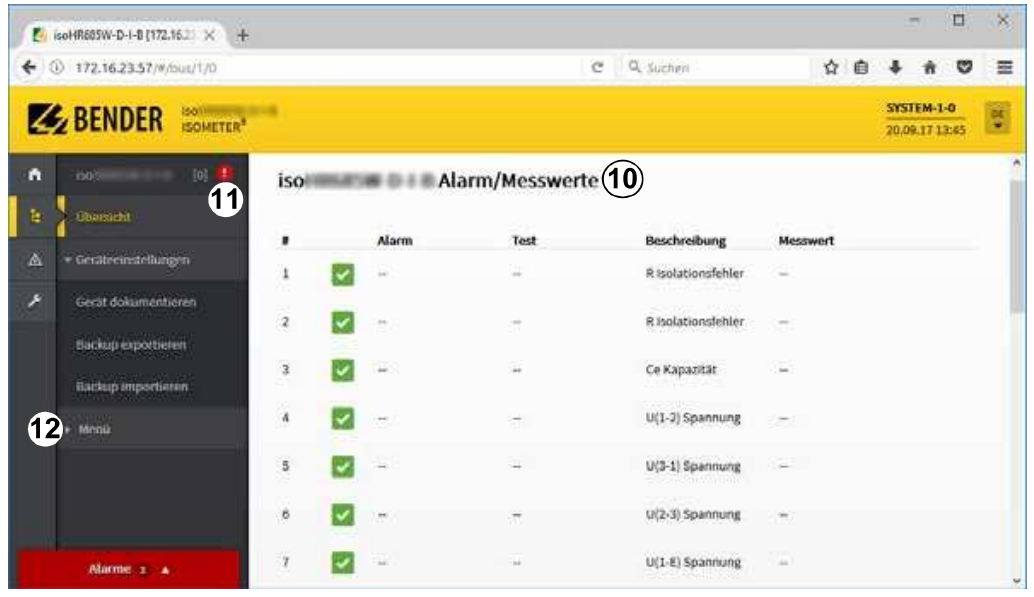

10	Menu path	Displays the current menu path
11		Measurement OK Measurement error
12	Submenu	Submenu closed Submenu open

Device communication

11.5 BS bus

The BS bus is used to extend Bender measuring devices (e.g. ISOMETER®) It is an RS-485 interface with a specially developed protocol for Bender devices. On the BS bus, the transmission of alarm messages takes priority over the transmission of all other messages. For further information, refer to the BS bus manual (document number: D00278) at www.bender.de/manuals.

CAUTION

When using interface converters, a galvanic separation is required.

The compatibility of the BS bus and the BMS bus is restricted!

11.5.1 Master-slave principle

The BS bus works according to the master-slave principle. This means that the measuring device operates as the MASTER, while all sensor devices operate as SLAVES. The master is responsible for the communication necessary for the measuring function. It also provides the required bus bias voltage for the operation of the BS bus.

11.5.2 Addresses and address ranges on the BS bus

Address 1 is assigned to the master. All sensor devices receive unique addresses starting with address 2, assigned in consecutive order without gaps. In the event of a device failure, a maximum gap of 5 addresses is permissible.

11.5.3 RS-485 specifications/cables

The RS-485 specification restricts the cable length to 1200 m and requires a daisy chain connection. The number of devices on the BS bus is only limited by the BS bus master.

Use twisted pair, shielded cables for bus cabling. For example, cable type J-Y(St)Y n x 2 x 0.8 is suitable. The shield must have a single-ended connection to earth. The BS bus must be terminated at both ends with terminating resistors (120 Ω, 0.25 W). The terminating resistors are connected in parallel to the terminals A and B. Some devices feature integrated terminating resistors and can be activated or deactivated via the "R" button.

11.5.4 Cable routing

The optimum cable routing for the BS bus is a double-terminated bus topology. The length of the branch line is limited to 1 m. These branch lines do not have to be terminated.

Bus topology examples:

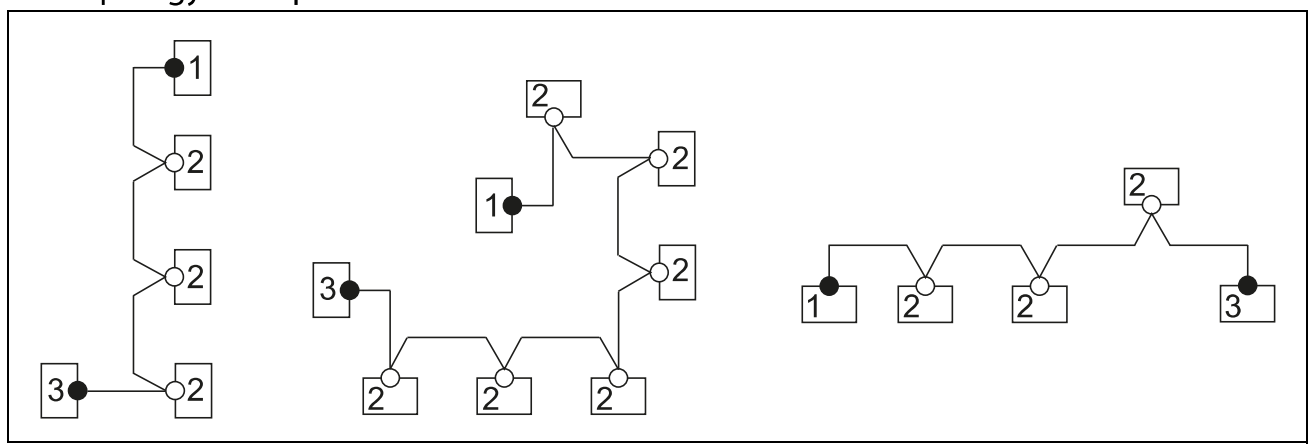

Termination

1	Master	Terminating resistor activated via switch on device (ON) or external terminating resistor between terminals A and B
2	Slave	Terminating resistor deactivated via switch on device (OFF)
3	Slave	Terminating resistor activated via switch on device (ON) or external terminating resistor between terminals A and B

CAUTION

Only the first and last device may be terminated. Therefore, check all devices.

12. Device profiles

Adjustment to different applications can be carried out very easily by selecting a device profile.

	Nominal system voltage	System frequency	System leakage capacitance	Measuring voltage	Measuring range	Response values	Description
Power circuits	AC 0…690 V/ DC 0…1000 V	15…460 Hz	0…150 µF	± 50 V	0.1 kΩ…20 MΩ	1 kΩ…10 MΩ	Main circuits without dynamic frequency changes. The universal profile is suitable for all systems primarily with constant mains frequencies and extraneous DC voltages. When using inverters and dynamic frequency control, select inverters > 10 Hz or inverters < 10 Hz.
Control circuits	AC 0…230 V/ DC 0…230 V	15…460 Hz	0…150 µF	± 10 V	0.1 kΩ…20 MΩ	1 kΩ…10 MΩ	This profile is used to reduce the measurement voltage to ±10 V in control systems with lower nominal voltages in order to reduce the impact by the ISOMETER® on sensitive switching elements.
Generator	AC 0…690 V	50…60 Hz	0…5 µF	± 50 V	0.1 kΩ…20 MΩ	1 kΩ…10 MΩ	This profile allows the realisation of a very fast measuring time, e.g. as required for generator monitoring. Furthermore, this profile can be used to support fast fault localisation in an IT system. The generator profile is suitable for AC systems containing DC components.
High capacitance	AC 0…690 V/ DC 0…1000 V	15…460 Hz	0…1000 µF	± 50 V	0.1 kΩ…20 MΩ	1 kΩ…10 MΩ	For systems with high leakage capacitances, e.g. ship applications, the impact of leakage capacitances on the measuring result can be significantly reduced by selecting this profile.
Inverter > 10 Hz	AC 0…690 V/ DC 0…1000 V	10…460 Hz	0…20 µF	± 50 V	0.1 kΩ…20 MΩ	1 kΩ…10 MΩ	This profile is used for systems with dynamic frequency control by inverters in the range 10 to 460 Hz in order to optimise the measurement with respect to the measuring time and quality.
Inverter <10 Hz	AC 0…690 V/ DC 0…1000 V	0.1…460 Hz	0 …20 µF	± 50 V	0.1 kΩ…20 MΩ	1 kΩ…10 MΩ	For systems involving extremely low frequency control in the range of up to 0.1...460 Hz and very low and continuously changing extraneous DC voltages due to dynamic load conditions in an IT system, continuous insulation monitoring can be optimised using this profile.*
Customer specific	–	–	–	–	–	–	Allows Bender service to make customer-specific settings. If no settings are made by Bender service, then the profile has the same parameters as the "Power circuits" profile.

For response times, see "Diagrams" on page 49.

When another profile is selected, the value of R_{min} is reset.
Switching between profiles can result in longer measuring times.

**** Low frequency mains voltage***
For very low frequency networks, the nominal system voltage is reduced according to the specifications in the chapter "Technical data" on page .53

If a coupling device is selected during the commissioning or in the device menu, the ISOMETER® automatically sets the system type to 3AC. This setting must not be changed.

If the ISOMETER® is operated with a coupling device, this device must be specified in the commissioning assistant during commissioning or in the device menu later on.

If the ISOMETER® is operated with a coupling device, the DC alarm and the coupling monitoring are deactivated.

If the ISOMETER® is operated with a coupling device, the values of the coupling monitoring, the DC offset and the measured values are not determined correctly.

Mount terminal covers and click them into place after connecting the coupling device to the ISOMETER®. For further Information see 6.9 “Position the terminal covers and click it into place” from page 22.

13.1 Connection using the AGH150W-4(DC)

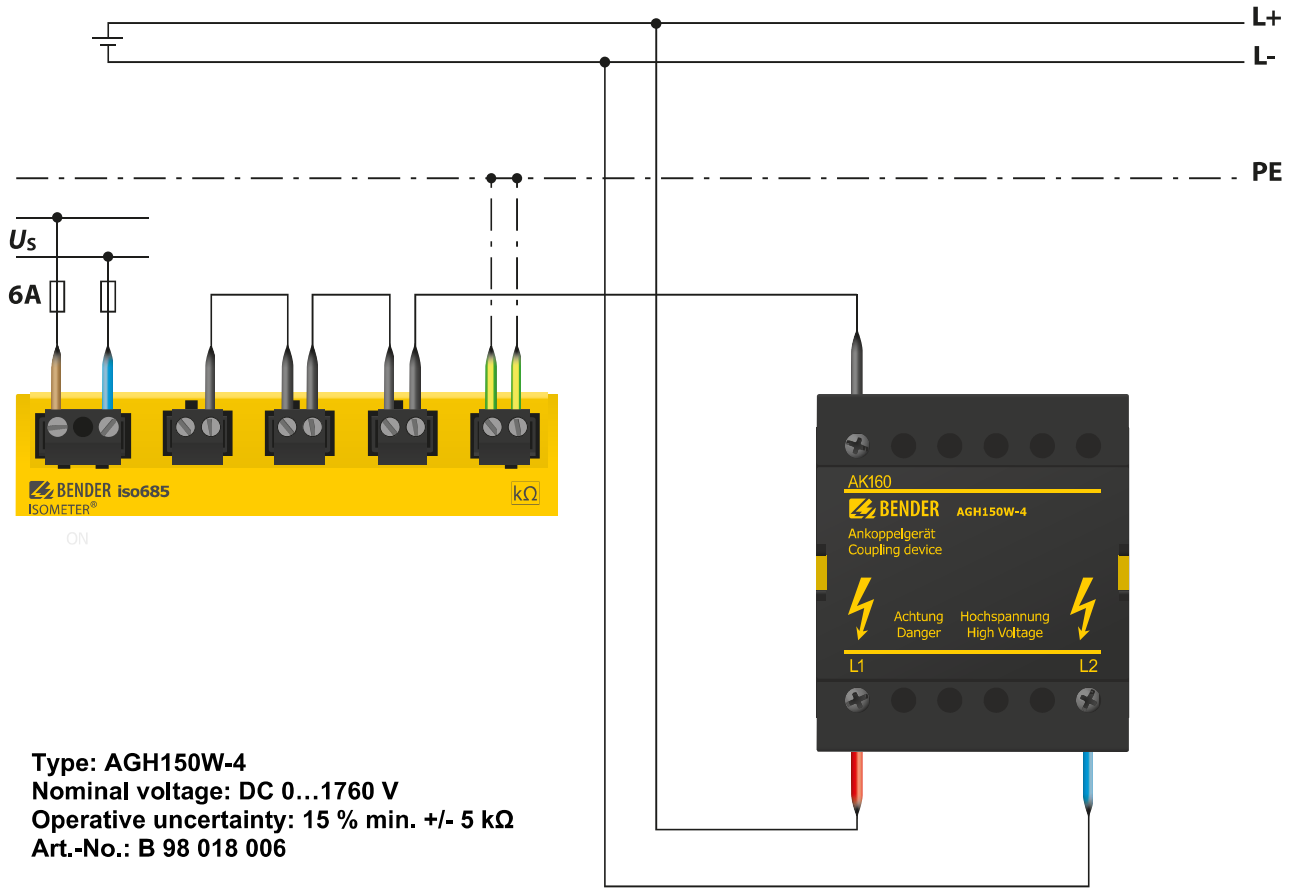

Type: AGH150W-4
Nominal voltage: DC 0…1760 V
Operative uncertainty: 15 % min. +/- 5 kΩ
Art.-No.: B 98 018 006

DANGER

Risk of electric shock!
The coupling device is operated with high voltage, which can be life-threatening in case of direct contact. Make sure that only electrically skilled persons work on or with the device. Read the operating manual of the coupling device carefully.

13.2 Connection using the AGH150W-4 (3(N)AC)

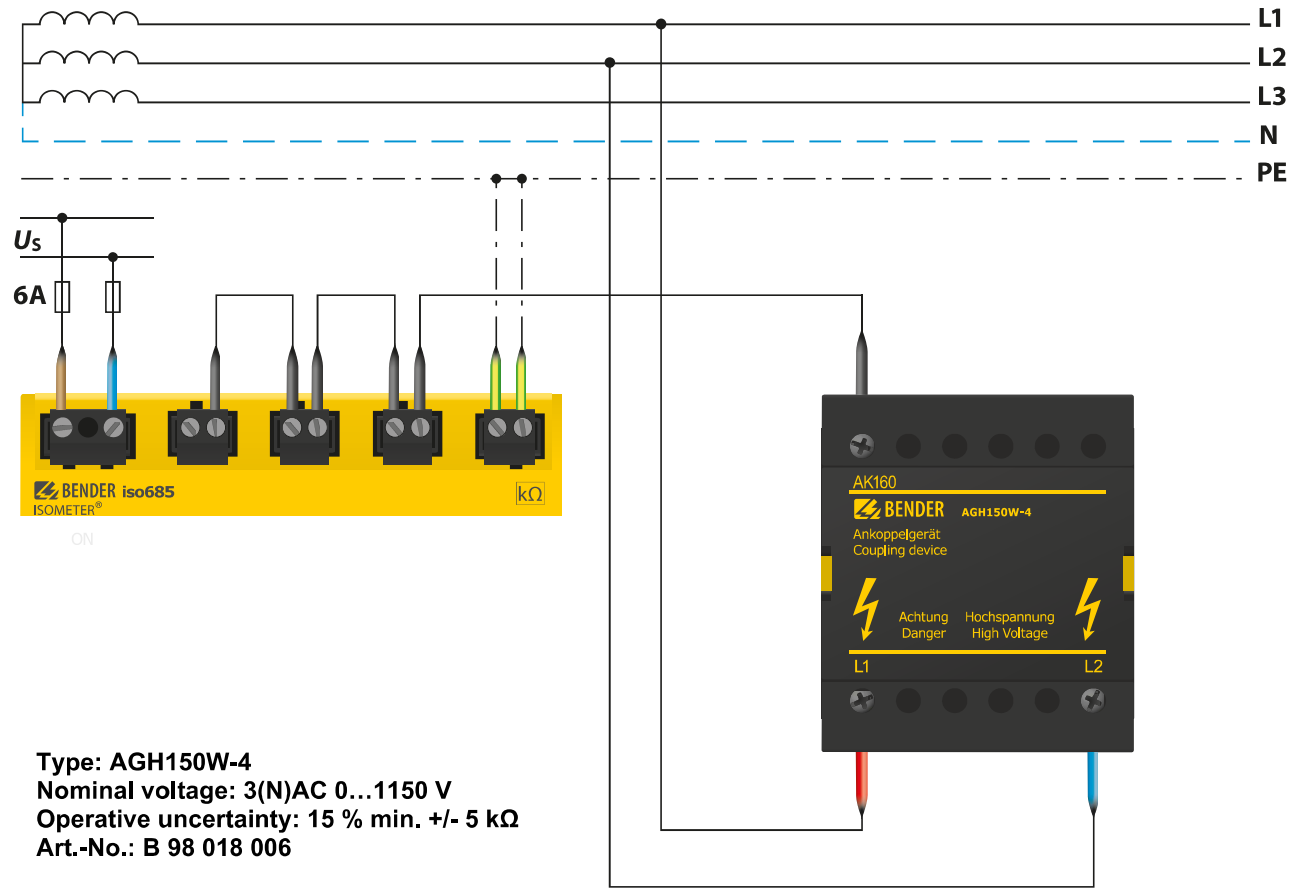

Type: AGH150W-4
Nominal voltage: 3(N)AC 0…1150 V
Operative uncertainty: 15 % min. +/- 5 kΩ
Art.-No.: B 98 018 006

DANGER

Risk of electric shock!
The coupling device is operated with high voltage, which can be life-threatening in case of direct contact. Make sure that only electrically skilled persons work on or with the device. Read the operating manual of the coupling device carefully.

13.3 Connection using the AGH520S 3(N)AC

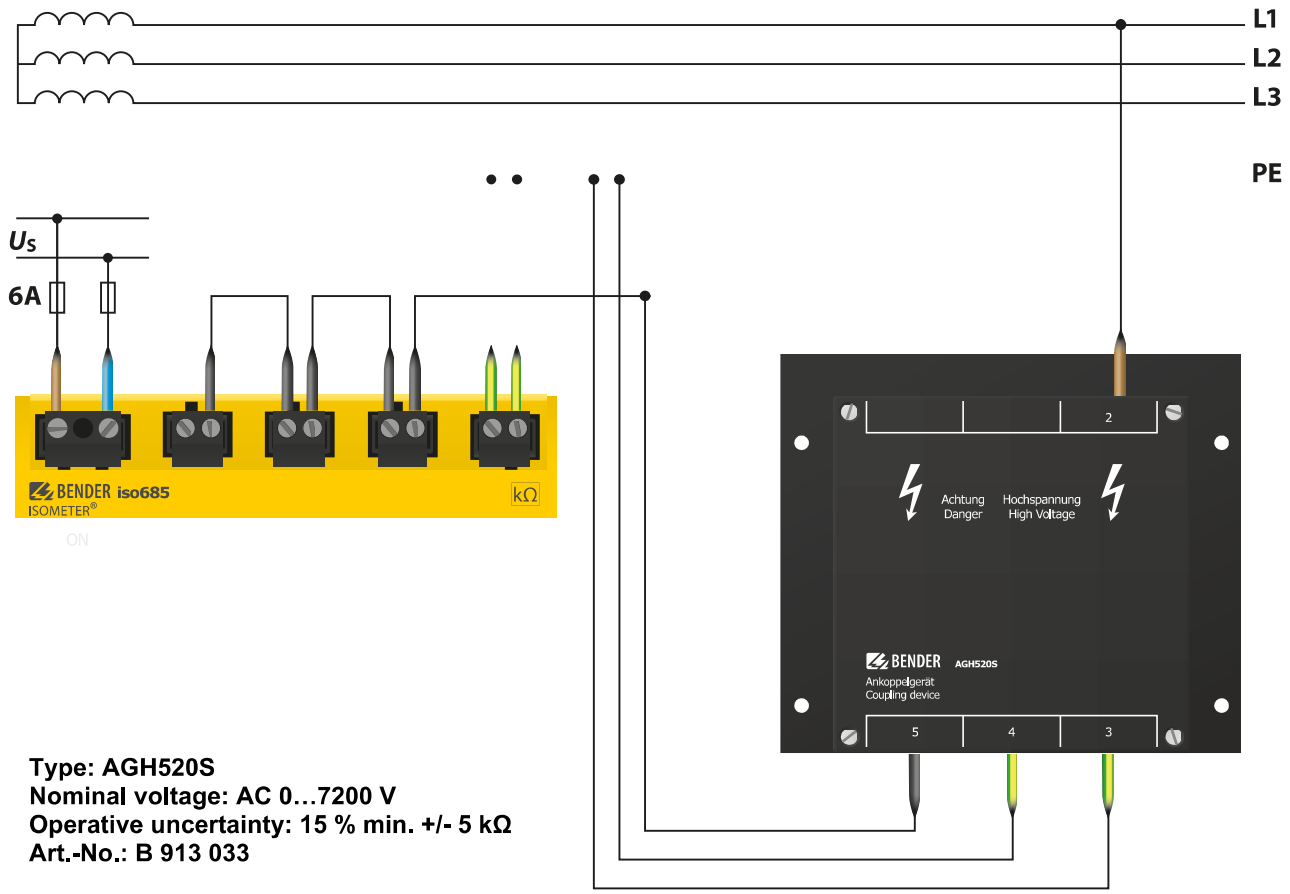

Type: AGH520S
Nominal voltage: AC 0…7200 V
Operative uncertainty: 15 % min. +/- 5 kΩ
Art.-No.: B 913 033

DANGER

Risk of electric shock!

The coupling device is operated with high voltage, which can be life-threatening in case of direct contact. Make sure that only electrically skilled persons work on or with the device. Read the operating manual of the coupling device carefully.

Coupling devices

13.4 Connection using the AGH520S (3AC)

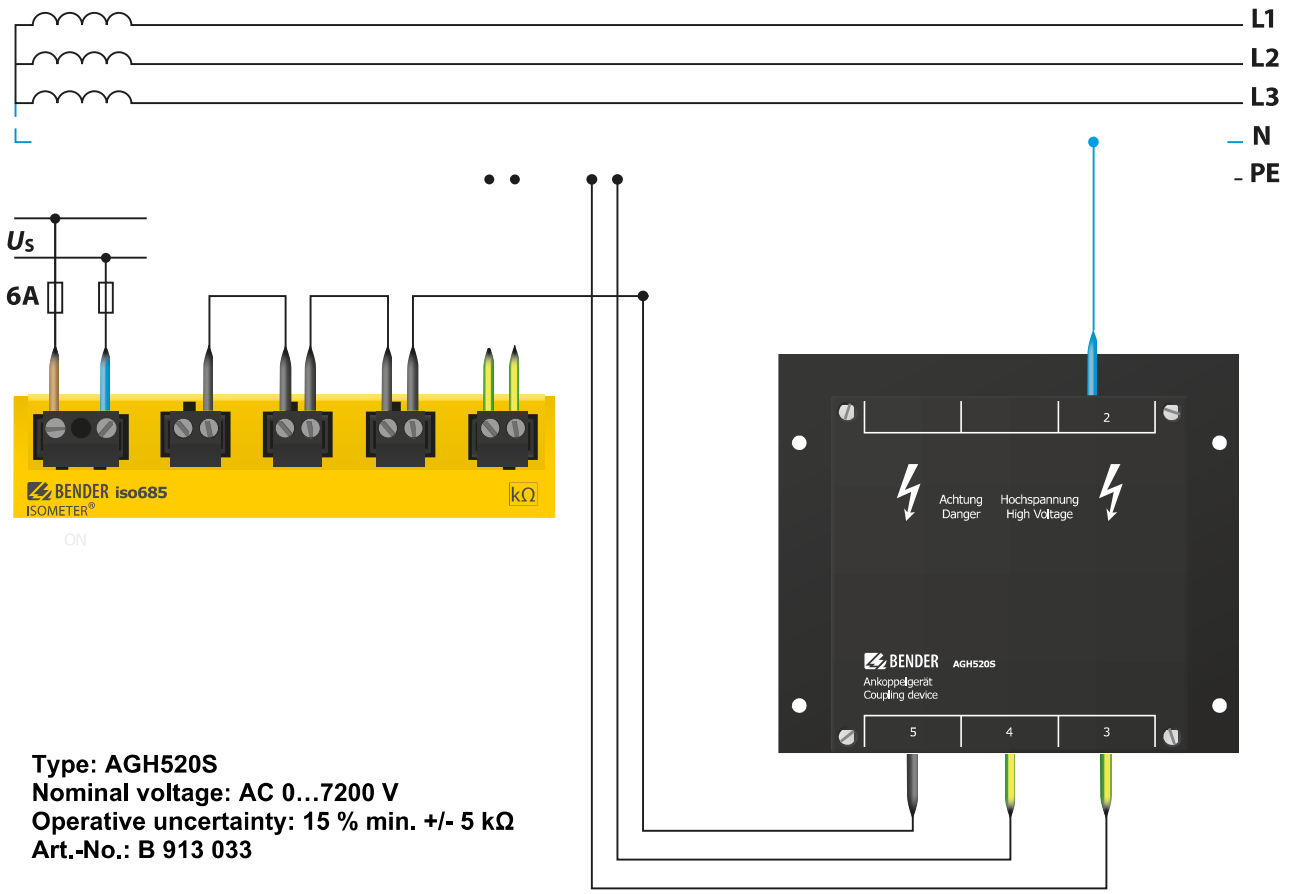

Type: AGH520S
Nominal voltage: AC 0…7200 V
Operative uncertainty: 15 % min. +/- 5 kΩ
Art.-No.: B 913 033

DANGER

Risk of electric shock!

The coupling device is operated with high voltage, which can be life-threatening in case of direct contact. Make sure that only electrically skilled persons work on or with the device. Read the operating manual of the coupling device carefully.

13.5 Connection using the AGH204S-4

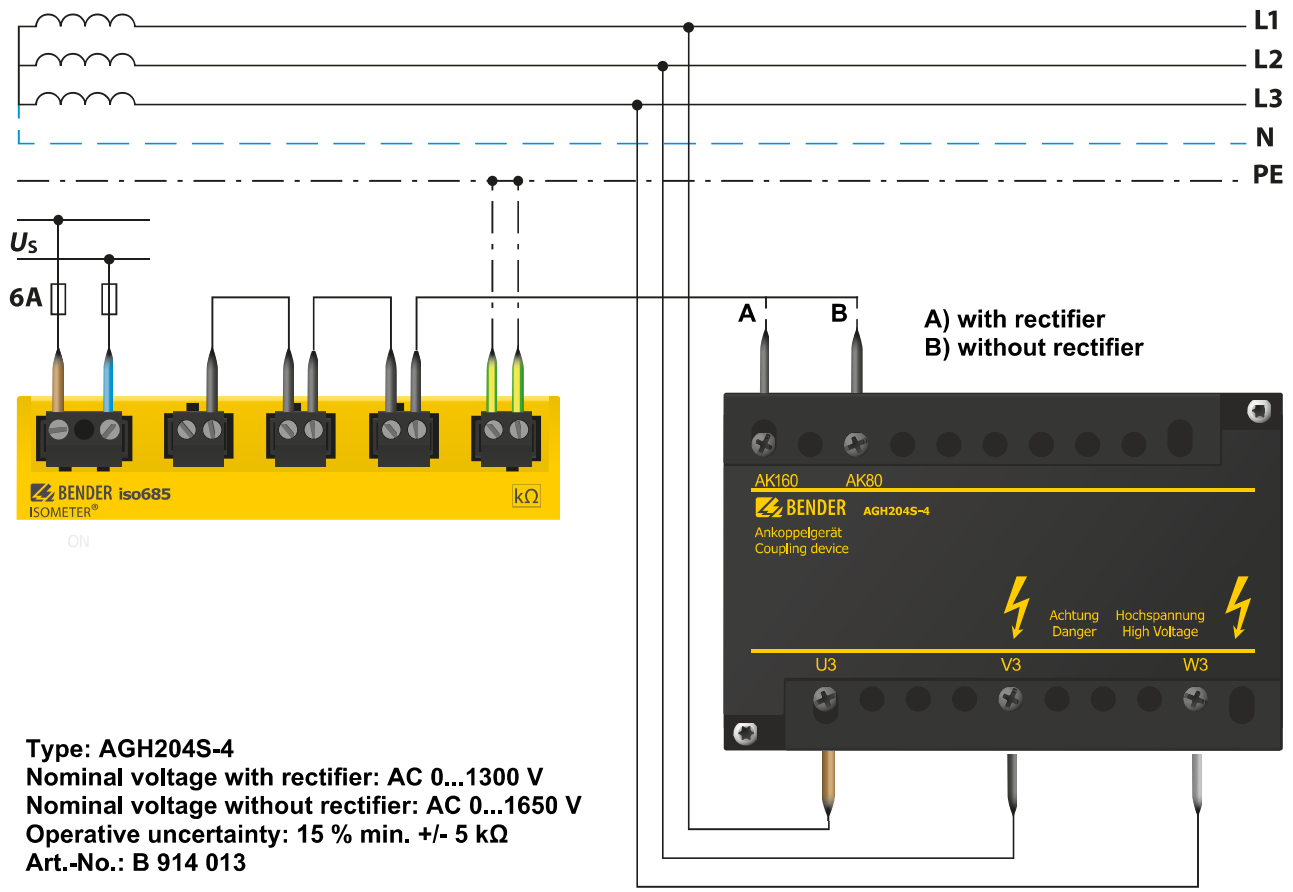

Type: AGH204S-4
Nominal voltage with rectifier: AC 0...1300 V
Nominal voltage without rectifier: AC 0...1650 V
Operative uncertainty: 15 % min. +/- 5 kΩ
Art.-No.: B 914 013

DANGER

Risk of electric shock!

The coupling device is operated with high voltage, which can be life-threatening in case of direct contact. Make sure that only electrically skilled persons work on or with the device. Read the operating manual of the coupling device carefully.

13.6 Connection using the AGH676S-4

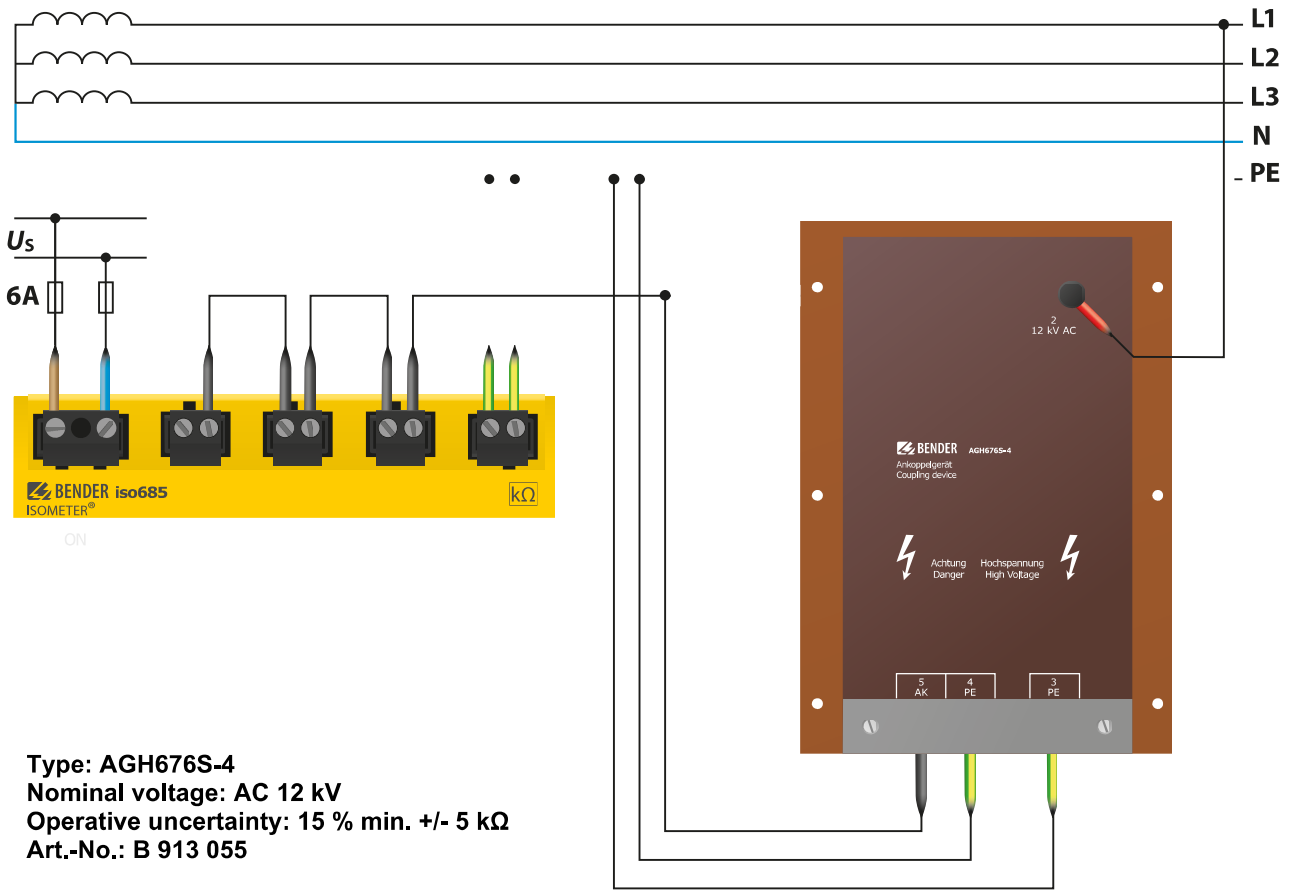

Type: AGH676S-4
Nominal voltage: AC 12 kV
Operative uncertainty: 15 % min. +/- 5 kΩ
Art.-No.: B 913 055

DANGER

Risk of electric shock!

The coupling device is operated with high voltage, which can be life-threatening in case of direct contact. Make sure that only electrically skilled persons work on or with the device. Read the operating manual of the coupling device carefully.

14. Diagrams

14.1 Response time profile power circuits

Response time as a function of the response value and system leakage capacitance according to IEC 61557-8 (U_n = 690 V, f = 50 Hz) measuring range < 10 MΩ

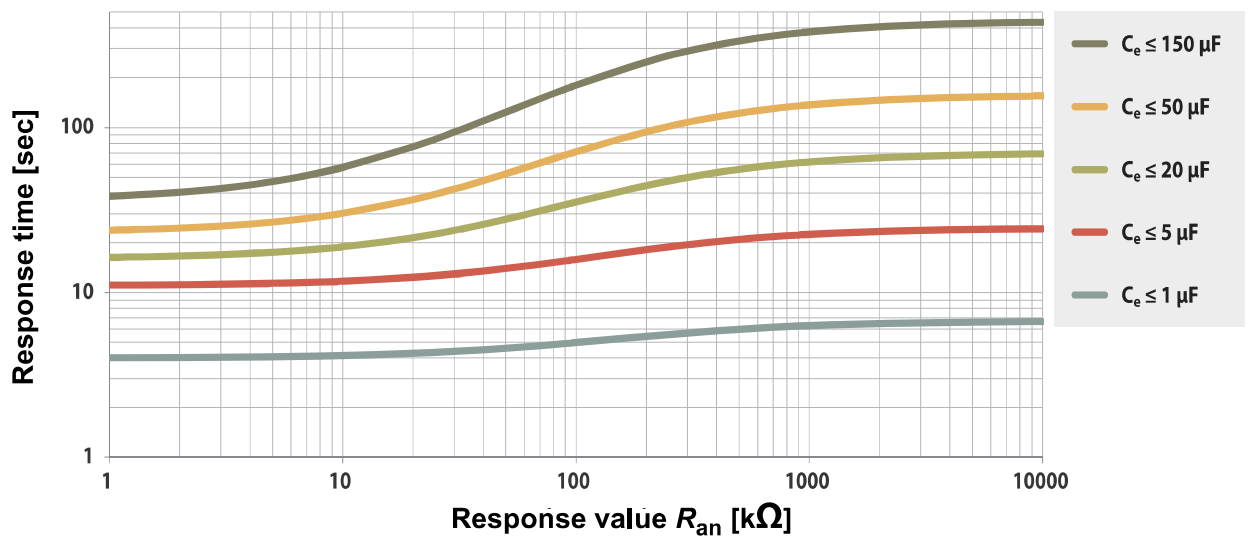

14.2 Response time profile control circuits

Response time as a function of the response value and system leakage capacitance according to IEC 61557-8 (U_n = 230 V, f = 50 Hz) measuring range < 10 MΩ

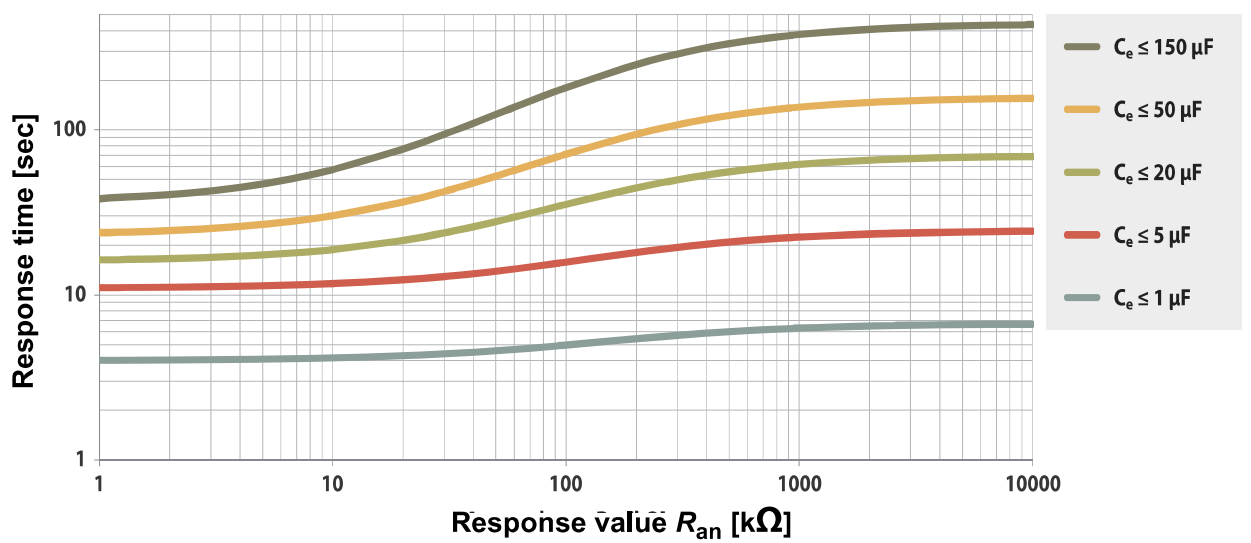

14.3 Response time profile generator

Response time as a function of the response value and system leakage capacitance according to IEC 61557-8 (U_n = 690 V, f = 50 Hz) measuring range < 10 MΩ

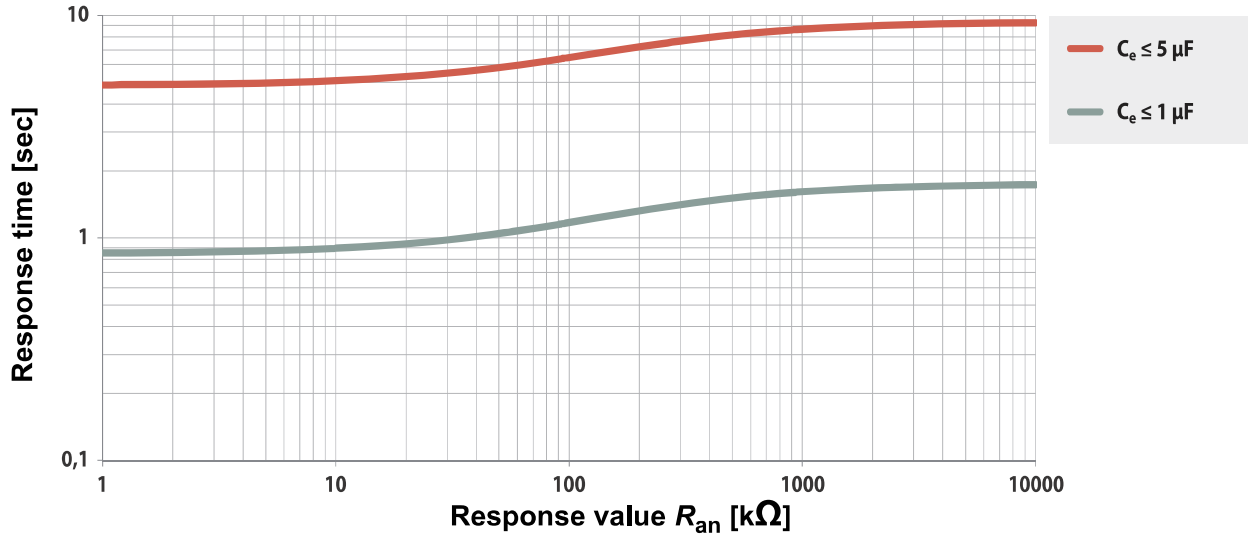

14.4 Response time profile high capacitance

Response time as a function of the response value and system leakage capacitance according to IEC 61557-8 (U_n = 690 V, f = 50 Hz) measuring range < 10 MΩ

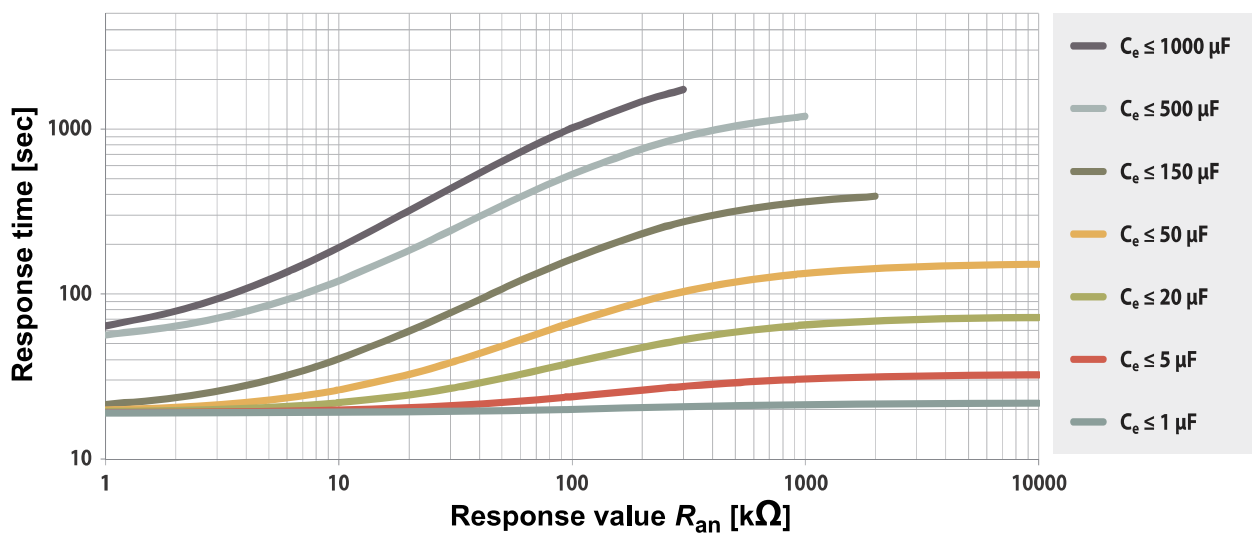

14.5 Response time profile inverter > 10 Hz

Response time as a function of the response value and system leakage capacitance according to IEC 61557-8 (U_n = 690 V, f = 50 Hz) measuring range < 10 MΩ

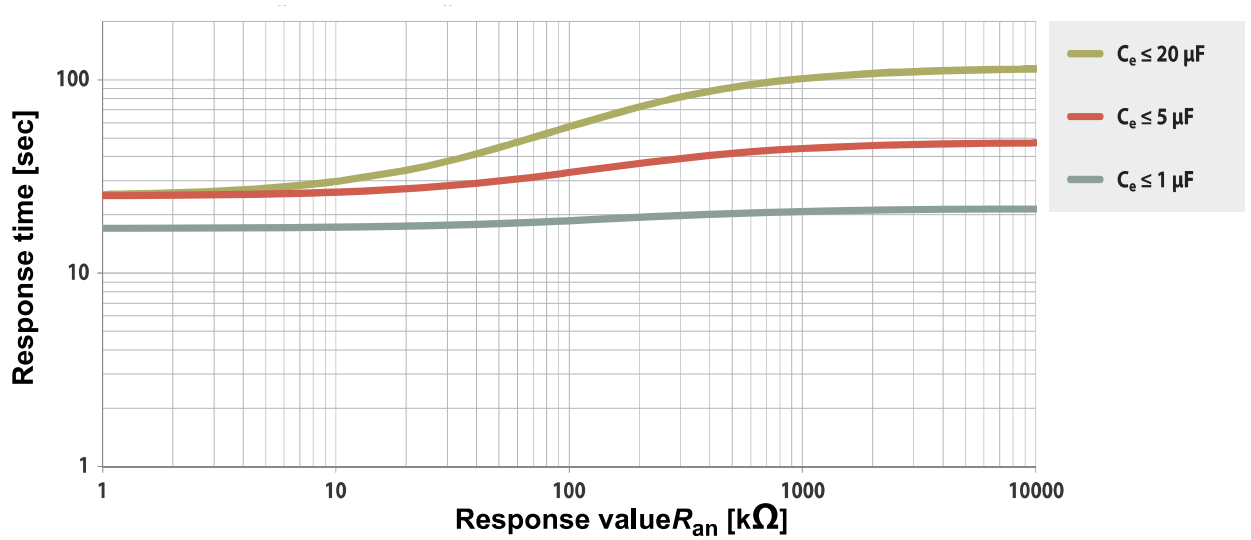

14.6 Response time profile inverter < 10 Hz

Response time as a function of the response value and system leakage capacitance according to IEC 61557-8 (U_n = 690 V, f = 50 Hz) measuring range < 10 MΩ

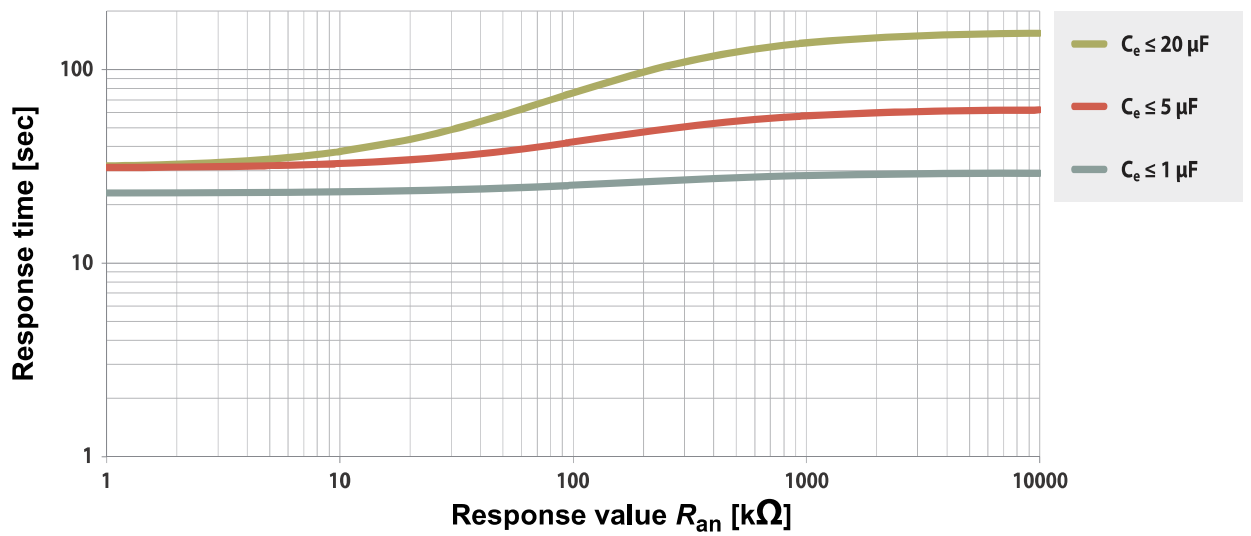

14.7 Response time DC Alarm

Typical response times for DC alarm for RF depending on system profile and system leakage capacitance

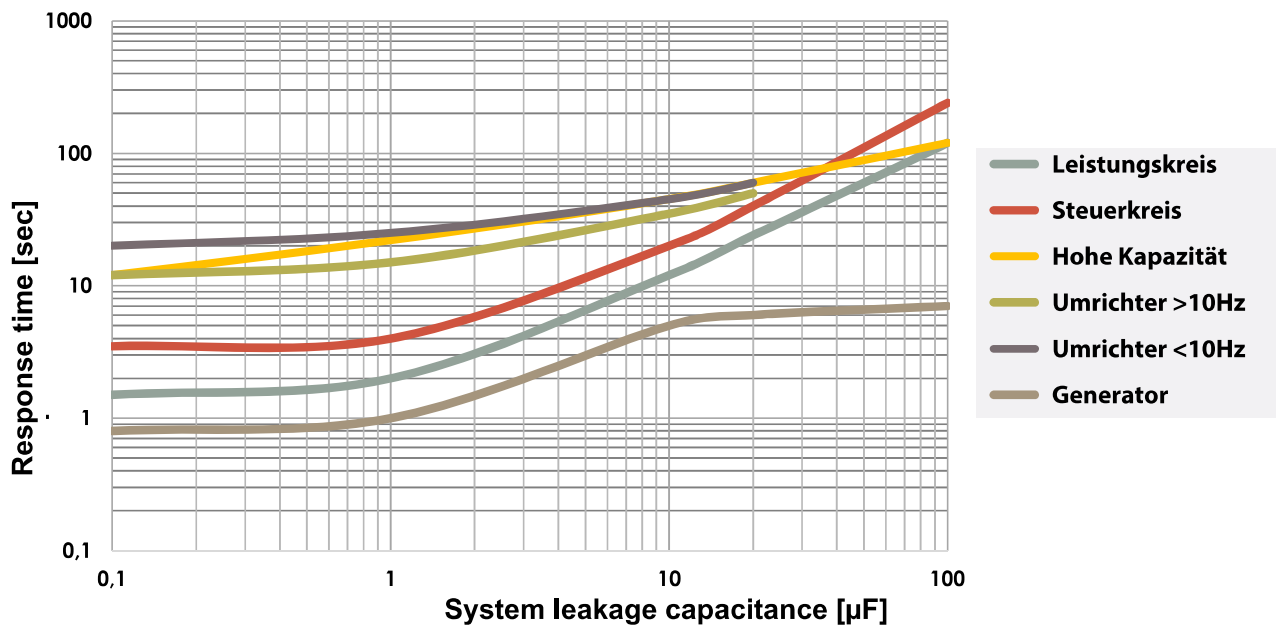

14.8 Operating uncertainty

Percentage operating uncertainty as a function of the response value and system leakage capacitance according to IEC 61557-8 (U_n = 690 V, f = 50 Hz) measuring range < 10 MΩ

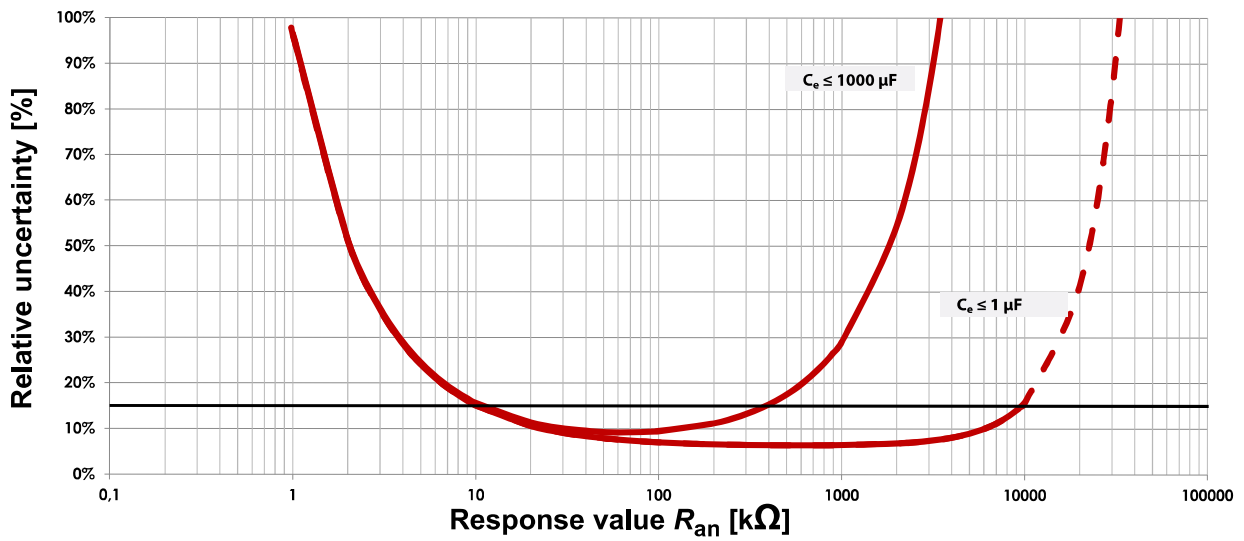

Alarm message	Description	Actions	Reference	LED indicators
Insulation fault	An insulation fault exists. The insulation resistance falls below the response value R_{an1}.	• Observe insulation resistance in the monitored system and, if necessary, eliminate fault. • Reset fault message by pressing the reset button	"Function description" on page 10	ALARM 1 lights
Insulation fault	An insulation fault exists. The insulation resistance falls below the response value R_{an2}.	• Eliminate insulation fault in the system being monitored • Reset fault message by pressing the reset button	"Function description" on page 10	ALARM 2 lights
Check L1-L2-L3 for correct connection!	No low-resistance connection between the line conductors	• Check the wiring of the terminals L1/+, L2 and L3/- to the IT system • Press the test button • Check mains voltage • Check the fuses • Check set system type	"Connection" from page 18 & menu setting "System type" on page 32	ALARM 1 + ALARM 2 flash alternately
Check that E-KE are properly connected.	No low-resistance connection between the terminals E and KE to earth (PE)	• Check the wiring of the terminals E and KE to earth (PE) • Press the test button	"Connection" from page 18	ALARM 1 + ALARM 2 flash in common mode
Service mode active!	The device is in maintenance condition	• Contact Bender Service		SERVICE lights up
Profile does not suit the application!	Wrong profile selected for this application	• Check measured system capacitance or system frequency in the Info menu • Select another profile taking the characteristics into consideration	"Profile" on page 32	
No DHCP server found!	Connection problem at the Ethernet interface	• Check cable connection at the Ethernet interface. • Check the DHCP server's availability. • Check the DHCP's interface configuration in the device	"DHCP" on page 38	
Check time and date!	Time and date have not yet been set.	• Set local date and time (buffer of three days in case of voltage failure)	"Clock" on page 37	
Load on X1 too high!	Sum of the external loads on X1 is too high	• Check load at X1.+, X1.Q1 and X1.Q2 • Check ambient temperature		
Device error x.xx	Internal device error	• Press the test button • Switch the supply voltage on and off • Contact Bender Service		SERVICE lights up
DC offset voltage	There is a DC offset voltage in the system.	• Check insulation fault and eliminate fault of DC components.	"DC alarm" on page 31	
Undervoltage	Operating outside the specified supply voltage range	• Check supply voltage		
Overvoltage	Operating outside the specified supply voltage range	• Check supply voltage		
Synchronizing ...	The device synchronises itself over a longer period of time. (longer than 5 minutes)	• Restart the device		

16. Factory settings

Parameter	Value
Response values/alarms	
Response value R_{an1} (ALARM 1)	40 kΩ
Response value R_{an2} (ALARM 2)	10 kΩ
DC alarm	off
DC-offset voltage for DC alarm	65 V
Fault memory	off
Coupling monitoring	on
System	
System type	3AC
System profile	Power circuits
Time response	
Start-up delay $T_{start-up}$	0 s
Digital inputs	
Digital input 1	
Mode (Operating mode)	Active high
Function	TEST
Digital input 2	
Mode (Operating mode)	active low
Function	RESET
Digital input 3	
Mode (Operating mode)	Active high
Function	Deactivate device

Parameter	Value
Digital outputs	
Digital output 1	
Function 1	off
Function 2	off
Function 3	off
Digital output 2	
Function 1	off
Function 2	off
Function 3	off
Switching elements	
Relay 1	
Test	on
Relay mode	N/C operation
Function 1	Ins. Alarm 1
Function 2	Connection fault
Function 3	off
Relay 2	
Test	on
Relay mode	N/C operation
Function 1	Ins. Alarm 2
Function 2	Device fault
Function 3	Connection fault
Interfaces	
DHCP	off
IP address	192.168.0.5
Net mask	255.255.255.0
BCOM address	system-1-0
Device address BS bus	3

17.1 Tabular data

Insulation coordination acc. to IEC 60664-1/IEC 60664-3

Definitions:

- Measuring circuit (IC1) ... L1/+, L2, L3/-
- Supply circuit (IC2) ... A1, A2
- Output circuit 1 (IC3) ... 11, 12, 14
- Output circuit 2 (IC4) ... 21, 22, 24
- Control circuit (IC5) (E, KE), (X1, ETH, X3, X4)

Rated voltage ... 1000 V
Overvoltage category ... III
Rated impulse voltage:

- IC1 / (IC2-5) ... 8 kV
- IC2 / (IC3-5) ... 4 kV
- IC3 / (IC4-5) ... 4 kV
- IC4 / IC5 ... 4 kV

Rated insulation voltage:

- IC1 / (IC2-5) ... 1000 V
- IC2 / (IC3-5) ... 250 V
- IC3 / (IC4-5) ... 250 V
- IC4 / IC5 ... 250 V

Pollution degree (U_n <1000 V) ... 3
Pollution degree for accessible parts on the outside of the device housing (U_n 690 < 1000 V) ... 2
Safe isolation (reinforced insulation) between:

- IC1 / (IC2-5) ... Overvoltage category III, 1000 V
- IC2 / (IC3-5) ... Overvoltage category III, 300 V
- IC3 / (IC4-5) ... Overvoltage category III, 300 V
- IC4 / IC5 ... overvoltage category III, 300 V

Voltage tests (routine test) acc. to IEC 61010-1

- IC2 / (IC3-5) ... AC 2.2 kV
- IC3 / (IC4-5) ... AC 2.2 kV
- IC4 / IC5 ... AC 2.2 kV

Supply voltage

Supply via A1/+, A2/-:
Supply voltage range U_S ... AC/DC 24 . . . 240 V
Tolerance of U_S ... -30 . . . +15 %
Maximum permissible input current of U_S ... 650 mA
Frequency range of U_S ... DC, 50 . . . 400 Hz[1)]
Tolerance of the frequency range of U_S ... -5 . . . +15 %
Power consumption, typically DC ... ≤ 12 W
Power consumption, typically 50/60 Hz ... ≤ 12 W/21 VA
Power consumption, typically 400 Hz ... ≤ 12 W/45 VA

Supply via X1:
Supply voltage U_S ... DC 24 V
Tolerance of U_S ... DC -20 . . . +25 %

IT system being monitored

Nominal system voltage range U_n ... AC 0 . . . 690 V
... DC 0 . . . 1000 V
... AC/DC 0 . . . 600 V (for UL applications)
Tolerance of U_n ... AC/DC +15 %
Frequency range of U_n ... DC 0.1 . . . 460 Hz
Max. AC voltage $U_\sim$ in the frequency range f_n = 0.1 . . . 4 Hz ... $U_{\sim\ max} = 50\ V/Hz^2 * (1 + f_n^2)$

Response values

Response value R_{an1} (Alarm 1) ... 1 kΩ . . . 10 MΩ
Response value R_{an2} (Alarm 2) ... 1 kΩ . . . 10 MΩ
Relative uncertainty (acc. to IEC 61557-8) ... dependent on the profile, ±15 %, at least ±1 kΩ
Hysteresis ... 25 %, at least 1 kΩ

Time response

Response time t_{an} at R_F (= 0,5 x R_{an} (R_{an} = 10 kΩ) and C_e = 1 µF acc. to IEC 61557-8 ...
... profile dependent, typ. 4s (see diagrams)
Response time DC Alarm at C_e = 1 µF acc. to IEC 61557-8 ... profile dependent, typ. 2 s (see diagram)
Start-up delay $T_{start-up}$ ... 0 . . . 120 s

Measuring circuit

Measuring voltage U_m ... profile dependent, ±10 V, ±50 V (see profile overview)
Measuring current I_m ... ≤ 403 µA
Internal resistance R_i ,Z_i ... ≥ 124 kΩ
Internal resistance on decouppled systems (inactive by I/O, inactive by ISOnet or cut-off) ... typ. 50 MΩ
Permissible extraneous DC voltage U_{fg} ... ≤ 1200 V
Permissible system leakage capacitance C_e ... profile dependent, 0 . . . 1000 µF

Measuring ranges

Measuring range f_n ... 0.1 . . . 460 Hz
Tolerance measurement of f_n ... ±1 % ±0.1 Hz
Voltage range measurement of f_n ... AC 25 . . . 690 V
Measuring range U_n (without an external coupling device) ... AC 25 . . . 690 V
... DC 0 . . . 1000 V
Voltage range measurement of U_n ... AC/DC > 10 V
Tolerance measurement of U_n ... ±5 % ±5 V
Measuring range C_e ... 0 . . . 1000 µF
Tolerance measurement of C_e ... ±10 % ±10 µF
Frequency range measurement of C_e ... DC, 30 . . . 460 Hz
Min. insulation resistance measurement of C_e ... depending on the profile and coupling mode, typ. > 10 kΩ

Technical data

Display

Indication ..... graphic display 127 x 127 pixels, 40 x 40 mm [2)]
Display range measured value ..... 0.1 kΩ . . . 20 MΩ

LEDs

ON (operation LED) ..... green
SERVICE ..... yellow
ALARM 1 ..... yellow
ALARM 2 ..... yellow

Inputs/outputs (X1-Schnittstelle)

Cable length X1 (unshielded cable) ..... ≤ 10 m
Recommended cable (shielded, shield connected to PE on one side: J-Y(St)Y min. 2x0.8) ..... ≤ 100 m
Total max. supply output current via X1.+/X1.GND for each output ..... max. 1 A
Total max. supply output current via A1/A2 in total on X1 ..... max. 200 mA
Total max. supply output current via A1/A2 in total on X1 between 16.8 V and 40 V .....
..... $I_{LmaxX1} = 10mA + 7mA/V * U_s$ [3)]
..... (negative values are not allowed for I_{LmaxX1})

Digital inputs (I1, I2, I3)

Number 3
Operating mode, adjustable ..... active high, active low
Functions ..... off, test, reset, deactivate device, start initial measurement
Voltage ..... Low DC -3 . . . 5 V, High DC 11 . . . 32 V
Voltage tolerance ..... ± 10 %

Digital outputs (Q1, Q2)

Number 2
Operating mode, adjustable active, passive
Functions ..... off, Ins. alarm 1, Ins. Alarm 2, connection fault, DC- alarm [4)], DC+ alarm [4)], symmetrical alarm,
..... device fault, common alarm, measurement complete, device inactive, DC offset alarm
Voltage passive ..... DC 0 . . . 32 V, active DC 0/19.2 . . . 32 V

Analogue output (M+)

Number 1
Operating mode ..... linear, midscale point 28 kΩ/120 kΩ
Functions ..... insulation value, DC shift
Current 0...20 mA (< 600 Ω), 4 . . . 20 mA (< 600 Ω), 0 . . . 400 µA (< 4 kΩ)
Voltage 0 . . . 10 V (>1 kΩ), 2 . . . 10 V (>1 kΩ)
Tolerance related to the current/voltage final value ..... ± 20 %

Interfaces

Field bus:

Interface/protocol ..... web server/Modbus TCP/BCOM
Data rate ..... 10/100 Mbit/s, autodetect
Max. number of Modbus requests ..... <100/s
Cable length ..... ≤ 100 m
Connection RJ45
IP address ..... DHCP/manual* 192.168.0.5*
Network mask 255.255.255.0*
BCOM address system-1-0
Function ..... communication interface

Sensor bus:

Interface/Protocol ..... RS-485 / isoData
Data rate mode 1 ..... 9.6 kBaud/s
Leitungslänge (dependant on the Baudrate) ..... ≤1200 m
Cable: twisted pair, one end of shield connected to PE ..... recommended: J-Y(St)Y min. 2x0.8
Connection ..... terminals X1.A, X1.B
Terminating resistor ..... 120 Ω, can be connected internally
Device address ..... 1 . . . 90

Switching elements

Number of switching elements ..... 2 changeover contacts
Operating mode ..... N/C operation/N/O operation
Contact 11-12-14 ..... off, Ins. alarm 1, Ins. Alarm 2, connection fault, DC- alarm [4)], DC+ alarm [4)], symmetrical alarm,
..... device fault, common alarm, measurement complete, device inactive, DC offset alarm
Contact 21-22-24 ..... off, Ins. alarm 1, Ins. Alarm 2, connection fault, DC- alarm [4)], DC+ alarm [4)], symmetrical alarm,
..... device fault, common alarm, measurement complete, device inactive, DC offset alarm
Electrical endurance under rated operating conditions, number of cycles 10,000

Contact data acc. to IEC 60947-5-1:

Utilisation category ..... AC-13 / AC-14 / DC-12 / DC-12 / DC-12
Rated operational voltage ..... 230 V / 230 V / 24 V / 110 V / 220 V
Rated operational current ..... 5 A / 3 A / 1 A / 0.2 A / 0.1 A
Rated insulation voltage ≤ 2000 m NN ..... 250 V
Rated insulation voltage ≤ 3000 m NN ..... 160 V
Minimum contact rating ..... 1 mA at AC/DC ≥ 10 V

Technical data

Environment/EMC and temperature range

EMC ..... IEC 61326-2-4[5)]
Operating temperature ..... -25 . . . +55 °C
Transport ..... -40 . . . +85 °C
Long-term storage ..... -40 . . . +70 °C

Classification of climatic conditions acc. to IEC 60721:

Staionary use (IEC 60721-3-3) ..... 3K5 (condensation and formation of ice possible)
Transport (IEC 60721-3-2) 2K3
Long-term storage (IEC 60721-3-1) 1K4

Classification of mechanical conditions acc. to IEC 60721:

Stationary use (IEC 60721-3-3) 3M4
Transport (IEC 60721-3-2) 2M2
Long-term storage (IEC 60721-3-1) 1M3
Area of application ..... ≤3000 m NN

Connection

Connection type ..... pluggable screw terminal or push-wire terminal

Screw-type terminals:

Nominal current ..... ≤ 10 A
Tightening torque ..... 0.5 . . . 0.6 Nm (5 . . . 7 lb-in)
Conductor sizes ..... AWG 24-12
Stripping length ..... 7 mm
rigid/flexible ..... 0.2 . . . 2.5 mm^2
flexible with ferrules, with/without plastic collar ..... 0.25 . . . 2.5 mm^2
Multiple conductor, rigid ..... 0.2 . . . 1 mm^2
Multiple conductor, flexible ..... 0.2 . . . 1.5 mm^2
Multiple conductor, flexible with ferrule without plastic sleeve ..... 0.25 . . . 1 mm^2
Multiple conductor, flexible withTWIN ferrule with plastic sleeve ..... 0.5 . . . 1.5 mm^2

Push-wire terminals:

Nominal current ..... ≤ 10 A
Conductor sizes ..... AWG 24-12
Stripping length ..... 10 mm
rigid/flexible ..... 0.2 . . . 2.5 mm^2
flexible with ferrules, with/without plastic collar ..... 0.25 . . . 2.5 mm^2
Multiple conductor, flexible withTWIN ferrule with plastic sleeve ..... 0.5 . . . 1.5 mm^2

Push-wire terminals X1:

Nominal current ..... ≤8 A
Conductor sizes ..... AWG 24-16
Stripping length ..... 10 mm
rigid/flexible ..... 0.2 . . . 1.5 mm^2
flexible with ferrule without plastic sleeve ..... 0.25 . . . 1.5 mm^2
flexible with ferrule with plastic sleeve ..... 0.25 . . . 0.75 mm^2

Other

Operating mode continuous operation
Mounting (0°) display oriented, cooling slots must be ventilated vertically[6)]
Degree of protection internal components IP40
Degree of protection terminals IP20
DIN rail mounting acc. to ..... IEC 60715
Screw fixing ..... 3 x M4 with mounting clip
Enclosure material ..... polycarbonate
Flammability class V-0
ANSI code 64
Dimensions (W x H x D) ..... 108 x 93 x 110 mm
Weight ..... < 390 g

1) at a frequency > 200 Hz, the connection of X1 ande Remote must be insulated. Only permanently installed devices which at least have overvoltage category CAT2 (300V) may be connected.
2) Indication limited outside the temperature range -25 . . . +55 °C.
3) U_s [Volt] = ISOMETER® supply voltage
4) For $U_n \geq 50$ V only.
5) This is a class A product. This product may cause radio interference in residential areas. In this case, the user may be required to take corrective actions.
6) Recommendation: Devices mounted at 0° (display oriented, cooling slots must be ventilated vertically)
For devices mounted at an angle of 45°, the max. working temperature is reduced by 10 °C.
For devices mounted at an angle of 90°, the max. working temperature is reduced by 20 °C.

17.2 Device feature W

Devices with the suffix "W“ feature increased shock and vibration resistance. The electronics is covered with a special varnish to provide increased protection against mechanical stress and moisture.

Combination of ISOMETER® sensor variant with the FP200W:
The requirements of Option "W" will only be fulfilled when the ISOMETER® sensor variant is mounted on DIN rail and connected to the FP200W via the patch cable.
Refer to the quick-start guide FP200 (Document number D00169).

Technical data

17.3 Standards and certifications

The ISOMETER® has been developed in compliance with the following standards:

- DIN EN 61557-8 (VDE 0413-8):2015-12
- IEC 61557-8:2014-12
- IEC 61557-8:2014/COR1:2016
- DIN EN 61557-8 Ber 1 (VDE 0413-8 Ber 1):2016-12

Subject to change! The standards specified take into account the valid edition up to 1/17/18, unless otherwise stated.

17.4 Ordering information

17.4.1 Device

Type	Supply voltage U_S	Art. No.
iso685–D	AC 24…240 V; 50…400 Hz; DC 24…240 V	B91067010
iso685W–D *	AC 24…240 V; 50…400 Hz; DC 24…240 V	B91067010W
Combination iso685–S + FP200	AC 24…240 V; 50…400 Hz; DC 24…240 V	B91067210
Combination iso685W–S+ FP200W *	AC 24…240 V; 50…400 Hz; DC 24…240 V	B91067210W

* Option „W“: Increased shock and vibration resistance 3K5; 3M7; -40…+70 °C

17.4.2 Accessories

Description	Art. No.
iso685 Mechanical accessories comprising: Terminal cover and 2 mounting clips*	B91067903
iso685 Plug kit, screw terminals*	B91067901
iso685 plug kit, with push-wire terminals	B91067902
Front cover 144x72 transparent (IP65) for FP200 **	B98060005

* included in the scope of delivery

** If the “transparent front cover 144x72 (IP65)” is used, the cutout in the control cabinet must be increased in height from 66 mm to 68 mm (+ 0.7 / -0 mm).

17.4.3 Suitable system components

Description	Type	Art. No.
Suitable measuring instruments	7204-1421	B986763
SKMP**: 28 kΩ,120 kΩ	9604-1421	B986764
Current values: 0…400 µA, 0…20 mA (Further information can be found under this link)	9620-1421	B986841
Display for front-panel mounting	FP200	B91067904
	FP200W *	B91067904W
ISOMETER® sensor variant AC 24…240 V; 50…400 Hz; DC 24…240 V Only in combination with FP200	iso685–S	B91067110
ISOMETER® sensor variant AC 24…240 V; 50…400 Hz; DC 24…240 V Only in combination with FP200W *	iso685W–S *	B91067110W

* Option „W“: Increased shock and vibration resistance 3K5; 3M7; -40…+70 °C

** SKMP = midscale point

18. Glossary

BCOM	Protocol for communication between Bender devices via an IP-based network.
BS bus	The Bender sensor bus is an interface which enables Bender devices to communicate with each other (RS-485 interface).
DHCP	Dynamic Host Configuration Protocol. It is used to assign the network configuration to Clients via a server.
Modbus TCP	Modbus is an internationally widely-used protocol for data transmission.
System (BCOM)	The system is the entire installation that is visible for the customer and defined by the customer. The BCOM communication takes place within this system. Naturally, different systems can exist independently in one network.
Subsystem (BCOM)	The subsystem structures parts of the system as units defined by the customer, e.g. all PQ devices. A typical subsystem are also "non BCOM-capable" devices that are hidden behind a proxy.
Web server	A web server presents the device functions graphically. The web server can be used for reading out measured values and for parameter setting.

A

Accessories 56
Alarm
- Alarm 1 11
- Alarm 2 11
- Alarm settings 31

B

BCOM 57
BS bus 57
Button
- DATA 14
- ESC 14
- INFO 14
- MENU 14
- OK 14
- RESET 14
- TEST 14

Buttons 14

C

Characteristic curves 49
Clock 24, 38
Commissioning 19, 23
- Commissioning wizard 23
- Initial commissioning 23
- Recommissioning 23

Commissioning wizard 23
Communication interfaces 41
- BCOM 41
- Ethernet 41
- Modbus/TCP 41
- Web server 41

Connection
- A1/+, A2/- 21
- AC system 20
- Connection requirements 18
- Connections and panel 13
- DC system 20
- Ethernet interface 21
- Relay 1 interface (11 12 14) 22
- Supply voltage 21

Connection to a 3(N)AC system 19
Control circuits 44
Coupling device
- AGH150W-4 48
- AGH204S-4 48
- AGH520S 47
- AGH676S-4 48

Coupling monitoring 32

D

Data-isoGraph 41
Date 24, 38
Device buttons 14
DHCP 57
Diagrams 49
Display 14, 26
- Data - isoGraph 41
- Fault display (active) 26
- Fault display (inactive) 27
- Fault memory 28
- History memory 29
- Limit values for R(an) 26
- Signal quality of the measurement 26
- Standard display 26

E

Ethernet interface 21

F

Features 10
Function description
- iso685-D 10

H

Hazards when handling the device 8
History memory 29

I

Initial measurement 29
Inputs 32
Insulation resistance
- Activate/deactivate measurement 32

Intended use 8
Interface 38
- Address 39
- DHCP 38
- Ethernet 38

Interfaces 11
- BS bus 43

ISOsync 45

L

Language 23, 37
LEDs
- ALARM 1 14
- ALARM 2 14
- ON 14
- SERVICE 14

M

Mains voltage 9
Measured values 37
Menu 30
Minimum current rectifier 19
Minimum distance 18
Modbus/TCP 57
Mounting
- DIN rail mounting 17
- Screw mounting 17

N

Nominal system voltage 44, 53
Nominal voltage 9, 18
Normal operation 26

Index

O

Operation
- Buttons 23
- Commissioning 19, 23

Output 34
- View current settings 40

P

Password 40
Position the terminal covers 22
Product description 10
Profile overview 44
Protective earth conductor (PE) 18

R

Response time
- Profile control circuits 49
- Profile generator 49
- Profile high capacitance 49
- Profile inverter 10 Hz 50
- Profile power circuits 49
- Relative uncertainty 50

Response value 10, 53

S

Safety instructions 6
Self test 11
Service menu 40
Settings 31, 45
- Alarm 31
- Basic settings 37
- Coupling devices 24
- Coupling monitoring 32
- Date and time 24
- Inputs 32
- Interface 38
- Language 23, 37
- Manual test 37
- Measured values 37
- Measurement insulation resistance 37
- Password 40
- Profile 24, 32
- Reset alarm message 37
- Response value Ran1, Ran2 24
- System type 24

Start initial measurement 37
Start-up delay 32
Supply voltage 53
System frequency 44
System leakage capacitance 9, 10, 44

T

Technical data 53

W

Web server 57
Write access 38

BENDER
The Power in Electrical Safety©

Bender GmbH & Co. KG
Postfach 1161 • 35301 Grünberg • Germany
Londorfer Straße 65 • 35305 Grünberg • Germany

Tel.: +49 6401 807-0
Fax: +49 6401 807-259

E-Mail: info@bender.de
Web: www.bender.de

Field Service
Service-Hotline: 0700-BenderHelp (Telefon und Fax)
Carl-Benz-Straße 8 • 35305 Grünberg • Germany

Tel.: +49 6401 807-760
Fax: +49 6401 807-629

E-Mail: info@bender-service.com
Web: http://www.bender.de

BENDER Group

Fotos: Bender Archiv und bendersystembau Archiv.

SEZIONATORE PER BASSA E MEDIA TENSIONE, SERIE “FI”

Manuale operativo

M-DFM_rev.02_I

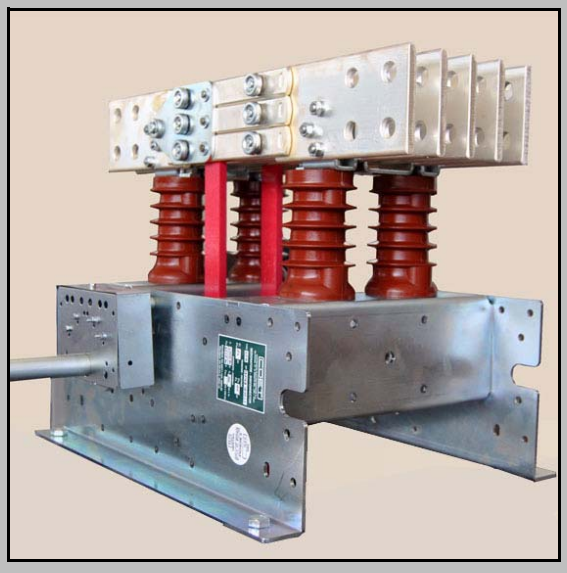

- Modello: DFM -

SEZIONATORE PER BASSA E MEDIA TENSIONE, SERIE “FI”
-Modello: DFM -

COET COSTRUZIONI ELETTROTECNICHE S.R.L.

Via Civesio, 12
20097 San Donato Milanese (MI)

Italia

Tel +39 02 842934
Fax +39 02 5279753
email coet@coet.it

M-DFM_rev.02_I

13/04/2018

Copyright COET COSTRUZIONI ELETTROTECNICHE S.R.L.

Il presente manuale non può essere riprodotto, modificato, trascritto o tradotto interamente o parzialmete senza autorizzazione scritta da parte di COET COSTRUZIONI ELETTROTECNICHE S.R.L

Tracciabilità delle revisioni

Codice Manuale - Revisione	Data	Descrizione Revisione
M-DFM_rev.00	29/06/2017	Emissione
M-DFM_rev.01	06/03/2018	cap.5+cap.3+cap.7
M-DFM_rev.02	13/04/2018	Copertina

INDICE GENERALE

INTRODUZIONE 1
Contenuti del manuale 1
Utilizzo del manuale 1
Chi deve leggere il manuale 1
Organizzazione del manuale 1
Conformità del dispositivo 1

CAP. 1 DESCRIZIONE 3
1.0.1 Generalità del dispositivo 3
1.0.2 Destinazione d'uso 3
1.0.3 Descrizione dei componenti 3

CAP. 2 SICUREZZA E RISCHI RESIDUI 5
2.1 Segnali di pericolo, obbligo e divieto 5
2.2 Avvisi 7
2.3 DPI richiesti per lavori elettrici / meccanici 7
2.4 Rischi residui 7
2.4.1 Pericoli di natura meccanica 7
2.4.2 Pericoli di natura elettrica 8
2.4.3 Pericoli provocati dal mancato rispetto dei principi ergonomici 8
2.4.4 Combinazione di pericoli 8

CAP. 3 INSTALLAZIONE 9
3.1 Informazioni generali 9
3.1.1 Caratteristiche elettriche e condizioni di utilizzo 9
3.1.2 Condizioni ambientali 9
3.1.3 Elenco componenti inviati 10
3.1.4 Liste ricambio 11
3.2 Trasporto e imballaggio 11
3.2.1 Conservazione del dispositivo in caso di stoccaggio prolungato 12
3.2.2 Imballaggio 12
3.3 Sollevamento e movimentazione in sicurezza 12
3.3.1 Sollevamento e movimentazione verticale - orizzontale 13
3.4 Montaggio e controllo 14
3.4.1 Montaggio della messa in servizio (DFM interno apparecchiatura) 14
3.4.2 Montaggio della messa in servizio (DFM fornitura sciolta) 15

CAP. 4 FUNZIONAMENTO 17
4.1 Funzionamento per la messa in sicurezza del dispositivo 17
4.1.1 Esempio di rinvio indiretto 20

CAP. 5 MANUTENZIONE 21
5.1 Manutenzione preventiva 21
5.2 Manutenzione correttiva 21

CAP. 6 ANALISI DEI GUASTI 23

CAP. 7 ALLEGATI 25
7.1 Allegato 1 26
7.2 Allegato 2 30
SMALTIMENTO APPARECCHIATURE COET 33
Tipologia di materiali utilizzati e loro smaltimento 33

COME CONTATTARE IL SERVIZIO ASSISTENZA 35

INTRODUZIONE

Contenuti del manuale

Questo manuale descrive l'installazione, il funzionamento e la manutenzione del dispositivo.

Utilizzo del manuale

Il presente manuale deve essere impiegato durante le fasi di assemblaggio, installazione, manutenzione, ricerca e risoluzione dei guasti.

Chi deve leggere il manuale

Questo manuale, è parte integrante del dispositivo, ed è stato realizzato per fornire le informazioni necessarie a tutti coloro che sono autorizzati ad interagire con esso nell'arco della sua vita prevista: utenti qualificati (tecnici del settore, progettisti, addetti all'assistenza) esperti nell' installazione, nell' uso e manutenzione di apparecchiature elettriche.
Oltre ad adottare una buona tecnica di utilizzo,i destinatari delle informazioni devono leggerle attentamente ed applicarle in modo rigoroso.
Un po' di tempo dedicato alla lettura di tali informazioni permetterà di evitare rischi alla salute e alla sicurezza delle persone e danni economici.
Conservare questo manuale per tutta la durata di vita del dispositivo in un luogo noto e facilmente accessibile, per averlo sempre a disposizione nel momento in cui è necessario consultarlo.

Dove necessario, per una spiegazione più dettagliata, questo manuale farà riferimento ad altri manuali, disegni meccanici, schemi elettrici o ad altri supporti forniti con la documentazione. Verrà specificato anche quale documento consultare. Il riferimento ad altre documentazioni sarà evidenziato da un apposito simbolo (vedi icona qui a lato).

COET COSTRUZIONI ELETTROTECNICHE S.R.L. si riserva il diritto di apportare modifiche al manuale senza l'obbligo di fornire preventivamente alcuna comunicazione.

Organizzazione del manuale

Il presente manuale è suddiviso in sette capitoli principali, contenenti procedure e spiegazioni:

— il Capitolo **DESCRIZIONE** contiene tutte le informazioni necessarie dei componenti principali del dispositivo;
— il Capitolo **SICUREZZE E RISCHI RESIDUI** riassume le misure di protezione adottate e i rischi residui;
— il Capitolo **INSTALLAZIONE** descrive il collegamento di tutti i dispositivi a corredo dell'impianto;
— il Capitolo **FUNZIONAMENTO** descrive, la funzionalità di alcuni componenti, eventuali manovre e controlli finali;
— il Capitolo **MANUTENZIONE** descrive sia la manutenzione preventiva, che la manutenzione correttiva. In entrambe le manutenzioni sono indicate oltre che l' attività da fare e la sua periodicità, gli attrezzi e gli strumenti utilizzati;
— il Capitolo **ANALISI DEI GUASTI** fornisce la descrizione di malfunzionamento ed una spiegazione che aiuta a capire il problema e come risolverlo.
— il Capitolo **ALLEGATI** contiene tutti i documenti allegati riferiti al dispositivo specifico.

Conformità del dispositivo

I dispositivi COET sono stati progettati, costruiti e testati per operare in condizioni di massima sicurezza rispondenti alle norme di sicurezza **CE** .

In particolare, questo dispositivo è costruito conformemente alle seguenti norme:

— **Norma CEI EN 50124-1**: Coordinamento degli isolamenti: Requisiti base - Distanze in aria e distanze superficiali per tutta l'apparecchiatura elettrica elettronica.
— **Norma CEI EN 50123-1**: Generalità.
— **Norma CEI EN 50123-2**: Interruttori a corrente continua
— **Norma CEI EN 50123-3**: Sezionatori, interruttori di manovra-sezionatori e sezionatori di terra a corrente continua per interno.
— **Norma CEI EN 62271-102:**Sezionatori e sezionatori di terra a corrente alternata per alta tensione.
— **Norma CEI EN 60694:**Prescrizioni comuni per apparecchiature di manovra e di comando in alta tensione.

CAP. 1 DESCRIZIONE

1.0.1 Generalità del dispositivo

La caratteristica particolare di questo sezionatore è definita dal sistema di contatti multipli assolutamente indipendenti tra loro e con molle per ogni punto di contatto. I coltelli hanno punti di contatto predeterminati ed incruditi in modo da avere cadute di tensione particolarmente contenute e prestazioni costanti nel tempo.

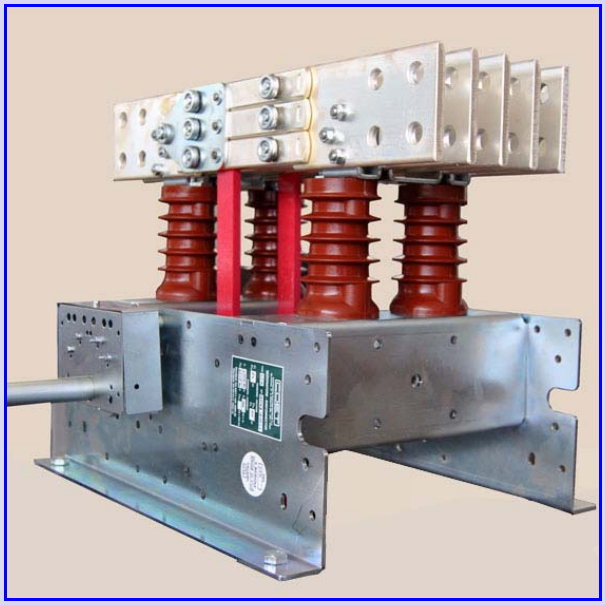

Sezionatori tipo DFM

1.0.2 Destinazione d'uso

Il sezionatore è un dispositivo di manovra in grado di interrompere in modalità visibile un circuito elettrico AC o DC, può essere azionato in condizioni di tensione, ma senza corrente. I sezionatori, sono previsti per l' installazione in ambiente interno e devono essere inseriti a monte od a valle di un organo di interruzione sotto carico.

1.0.3 Descrizione dei componenti

DFM è costituito da più componenti principali:

— Parti attive in rame elettrolitico con superficie argentata (1);
— Isolatori portanti in resina epossidica (2);
— Telaio in acciaio presso-piegato, protetto con zincatura (3);
— Contatti ausiliari (4)

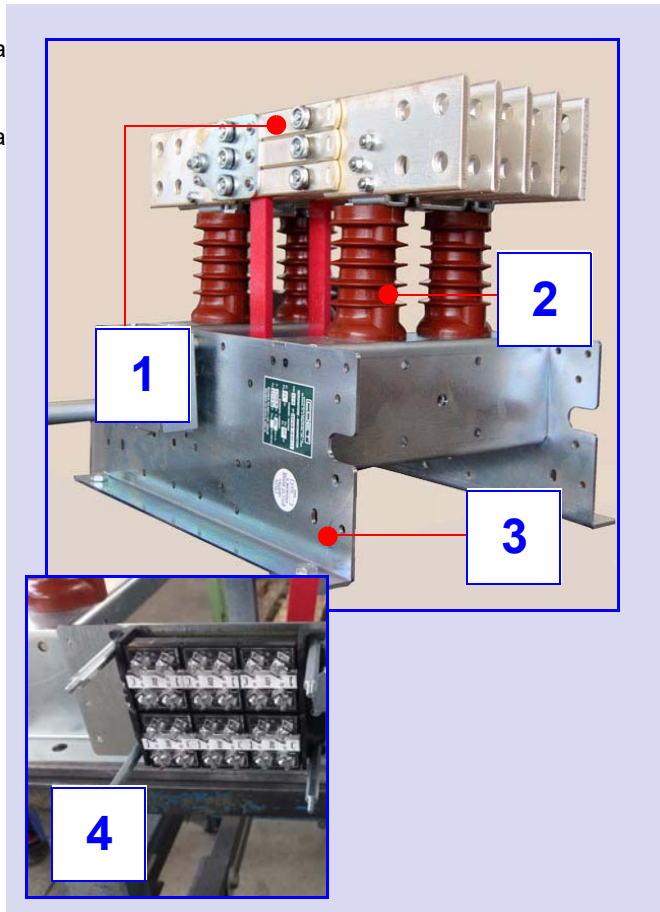

Descrizione dei componenti

Accessori

Tutti i sezionatori sopra menzionati possono accettare i seguenti accessori:

— Motore destro o sinistro. In entrambi i casi con le seguenti caratteristiche possibili, 110Vcc - 125 Vcc - 132 Vcc - 220Vcc-380Vca;

— lame di messa a terra superiori con le seguenti caratteristiche possibili,16kA-25kA-40kA-50kA-63kA. Il comando delle lame di terra rispetto alle lame di linea può essere libera, interbloccata o simultanea.

— lame di messa a terra inferiori con le seguenti caratteristiche possibili,16kA-25kA-40kA-50kA-63kA. Il comando delle lame di terra rispetto alle lame di linea può essere libera, interbloccata o simultanea.

— lame di messa a terra doppie con le seguenti caratteristiche possibili,16kA-25kA-40kA-50kA-63kA. In questa condizione le lame possono essere: libera, interbloccata, simultanea, inferiore libero-superiore diretto, inferiore libero-superiore interbloccato,inferiore libero-superiore simultaneo,inferiore interbloccato-superiore libero, inferiore interbloccato-superiore interbloccato, inferiore interbloccato-superiore simultaneo, inferiore simultaneo-superiore libero, inferiore simultaneo-superiore interbloccato, inferiore simultaneo-superiore simultaneo.

— contatti ausiliari nelle seguenti configurazioni possibili (sia sulle lame di linea che sulle lame di terra) 1NO/NC AP+1NO/NC CH a DX, 2NO/NC AP+2NO/NC CH a SX,3NO/NC AP+3NO/NC CH a SX,4 NO/NC AP+4 NO/NC CH a SX,

— manovra manuale per comando sezionatore dotata di blocchi a chiave e/o elettromeccanici

— manovra manuale per comando sezionatore e lame di messa a terra dotata di blocchi a chiave e/o elettromeccanici

Accessori particolari

Su richiesta è possibile avere 3 poli di linea con sezionamento e messa a terra, più 2 poli supplementari di semplice messa a terra

CAP. 2 SICUREZZA E RISCHI RESIDUI

I problemi di sicurezza relativi a questo dispositivo sono di due tipi: rischi di natura meccanica e rischi di natura elettrica.
I rischi di natura meccanica si riferiscono principalmente alle fasi di assemblaggio, installazione, regolazione, funzionamento, manutenzione, ricerca guasti. I rischi di natura elettrica comprendono le fasi di installazione e di ciclo del dispositivo.

ATTENZIONE! COET COSTRUZIONI ELETTROTECNICHE S.R.L raccomanda il collegamento, le ispezioni dei fili elettrici e l'utilizzo del dispositivo a personale qualificato. La sicurezza e le prestazioni di questo tipo di alimentazione dipende fortemente dalla corretta installazione e dall'uso e manutenzione.

ATTENZIONE! Eventuali modifiche avventate sul prodotto possono portare lesioni gravi a cose e persone.

COET COSTRUZIONI ELETTROTECNICHE S.R.L non si ritiene responsabile su eventuali modifica del prodotto, modifiche ai componenti di sicurezza o alle sue funzionalità, alla sostituzione di uno o più componenti della fornitura e/o l'installazione di accessori, senza previa autorizzazione.

2.1 Segnali di pericolo, obbligo e divieto

Dove è necessario, il testo del manuale viene integrato da appositi segnali di pericolo, obbligo e divieto.

La grafica utilizzata è conforme alla Norma EN ISO 7010 e al Regolamento (UE) CLP. In particolare:
I segnali di pericolo hanno la forma triangolare con grafica color nero, sfondo color giallo e bordo color nero.



Segnale di pericolo

La loro funzione è quella di avvisare l'Utente riguardo ai pericoli legati a parti dell'impianto o a situazioni che potrebbero mettere a rischio la propria o altrui incolumità.

I segnali di obbligo sono circolari con grafica color bianco, sfondo color blu e bordo color bianco.

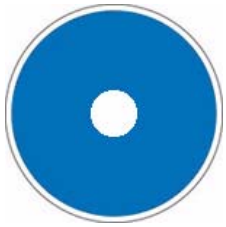

Segnali di obbligo

La loro funzione è quella di obbligare l'Utente a prendere tutte le misure necessarie per operare in condizioni di sicurezza.

I segnali di divieto sono circolari con grafica color nero, sfondo color bianco, bordo color rosso e una barra trasversale anch'essa di color rosso.



Segnali di divieto

La loro funzione è quella di vietare all'Utente quei comportamenti che potrebbero mettere a rischio la propria o altrui incolumità.

Simboli di sicurezza usati nel manuale

Simboli	Codice ISO 7010	Descrizione
	M008	Indossare calzature di sicurezza
	M009	Indossare guanti protettivi
	M010	Indossare indumenti protettivi
	M014	Indossare il casco
	M004	Indossare occhiali protettivi
	M032	Indossare calzature antistatiche
	W001	Segnale di avvertimento generale
	W007	Attenzione: pericolo ostacolo a livello del pavimento
	W011	Attenzione: pericolo superficie scivolosa
	W012	Attenzione: pericolo elettricità
	W024	Attenzione: pericolo schiacciamento delle mani
	W035	Attenzione: pericolo oggetti in caduta
	P001	Segnaletica di divieto generale

2.2 Avvisi

ATTENZIONE! Durante la manutenzione operare sempre sul dispositivo con la massima cura e attenzione. Ricordiamo che la manutenzione deve essere eseguita obbligatoriamente senza tensione di rete e dove è possibile con la tensione ausiliaria spenta.

I requisiti di tipo e omologazione dipendono dalla legge del paese in cui sono installati gli apparecchi.

COET COSTRUZIONI ELETTROTECNICHE S.R.L declina ogni responsabilità per eventuali danni causati da operazioni eseguite non in conformità con i metodi indicati.

2.3 DPI richiesti per lavori elettrici / meccanici

1- Casco
2- Giacca riflettente e indumenti protettivi
3- Guanti protettivi
4- Occhiali protettivi
5- Scarpe protettive

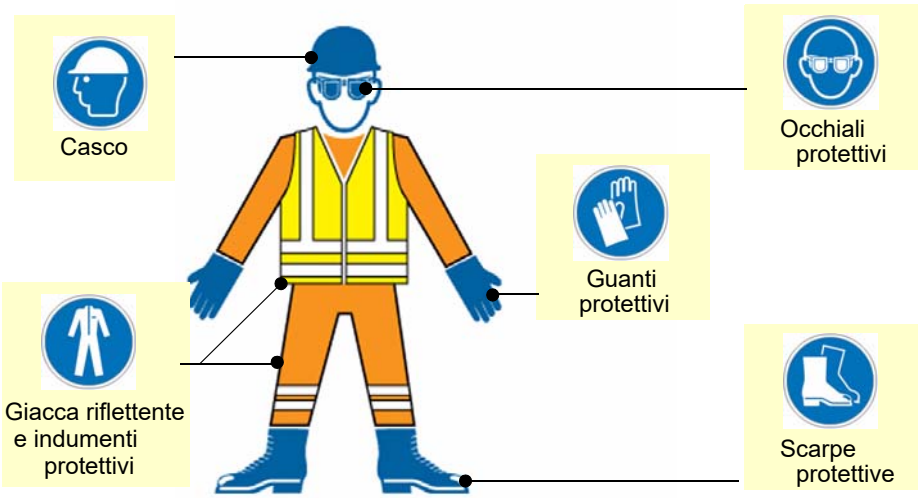

2.4 Rischi residui

Durante le fasi di utilizzo del dispositivo, le persone che si trovano in prossimità devono essere adeguatamente protette, tramite dispositivi di protezione individuale. La presente prescrizione vale in relazione a tutti i rischi sotto specificati.

Inoltre successivamente vengono descritti alcuni pericoli.

2.4.1 Pericoli di natura meccanica

Caduta parti meccaniche

Durante tutte le fasi di intervento sul dispositivo (assemblaggio, installazione, manutenzione, ricerca guasti), sussiste un rischio residuo di entità minima che si verifichi la caduta di parti meccaniche od un urto accidentale contro il dispositivo.

La durata di esposizione al rischio si limita al tempo di intervento, durante il quale la probabilità che si verifichi l'evento pericoloso è minima, può causare lesioni di lieve entità.

Usare guanti e manipolare con cura, eventualmente facendo riferimento al manuale della macchina.

Schiacciamento



Durante tutte le fasi di intervento sul dispositivo (assemblaggio, installazione, manutenzione, ricerca guasti), sussiste un rischio di entità minima che si verifichi uno schiacciamento degli arti superiori od inferiori, che può causare lesioni lievi.



Scivolamento, inciampo e caduta



Durante tutte le fasi di intervento sul dispositivo (assemblaggio, installazione, manutenzione, ricerca guasti), sussiste un rischio di entità minima che si verifichi uno scivolamento, un inciampo o una caduta.



Fare attenzione alla presenza di tubi, sporgenze e cavi presenti nei pressi del dispositivo.

2.4.2 Pericoli di natura elettrica

Contatto elettrico

In queste apparecchiature sussiste presenza di alte tensioni che possono causare lesioni gravi fino alla morte.





ATTENZIONE! Non accedere ai vani elettrici contenenti componenti elettrici sotto tensione: munirsi di calzature idonee alla protezione da rischio elettrico.

E' possibile diminuire il rischio di scosse elettriche:

- collegando l' apparecchio al circuito di terra.



ATTENZIONE! Se il pannello frontale non è installato o chiuso, NON avviare l' apparecchio. In questa fase il personale è in contatto diretto con le parti sotto tensione

2.4.3 Pericoli provocati dal mancato rispetto dei principi ergonomici

Posizioni errate o sforzi



Durante le fasi di intervento sul dispositivo (assemblaggio, installazione, manutenzione, ricerca guasti), sussiste un rischio di assumere posizioni insalubri o di fare sforzi.
La durata di esposizione al rischio si limita al tempo di intervento, durante il quale la probabilità che si verifichi l'evento pericoloso è minima, può causare lesioni di lieve entità.

Errore umano



Durante tutte le fasi di intervento sul dispositivo (assemblaggio, installazione, manutenzione, ricerca guasti), sussiste un rischio di commettere errori.
La probabilità che si verifichi un evento pericoloso e la gravità delle conseguenze non sono ponderabili.

Il personale preposto all'utilizzo deve essere adeguatamente qualificato.

2.4.4 Combinazione di pericoli

Mancato riposizionamento di dispositivi di protezione



Durante le fasi di intervento sul dispositivo (assemblaggio, installazione, manutenzione, ricerca guasti), sussiste un rischio di mancato riposizionamento di dispositivi di protezione.
La frequenza di esposizione al rischio è alta, può causare lesioni lievi o di media gravità.

Una volta completate le operazioni, tutti i dispositivi di protezione devono essere riposizionati e bloccati correttamente.

CAP. 3 INSTALLAZIONE

3.1 Informazioni generali

3.1.1 Caratteristiche elettriche e condizioni di utilizzo

Caratteristiche di isolamento					
Tensione nominale		**3.6 kV**	**12 kV**	**24 kV**	**36 kV**
Tensione di tenuta ad impulso atmosferica	• verso terra • sul sezionamento	• 40 kV di cresta • 46 kV di cresta	• 75 kV di cresta • 85 kV di cresta	• 125 kV di cresta • 145 kV di cresta	• 170 kV di cresta • 195 kV di cresta
Tensione di prova a 50 Hz	• verso terra • sul sezionamento	• 10 kV • 12 kV	• 28 kV • 32 kV	• 50 kV • 60 kV	• 70 kV • 80 kV
Distanze minime in aria	• verso terra • sul sezionamento	• 40 mm • 45 mm	• 80 mm • 85 mm	• 200 mm • 210 mm	• 310 mm • 345 mm

Caratteristiche di corrente						
Tipo DFM	**1000 A**	**1500 A**	**2000 A**	**3000 A**	**4000 A**	**6000 A**
Corrente nominale A.C	1500 A	1800 A	2600 A	3200 A	4500 A	5500 A
Corrente nominale D.C.	1600 A	2000 A	2800 A	4000 A	5000 A	6000 A
Corrente di breve durata	• 40 kA x 1s • 100 kA di cresta	• 50 kA x 1s • 125 kA di cresta	• 50 kA x 1s • 160 kA di cresta	• 63 kA x 1s • 160 kA di cresta	• 63 kA x 1s • 160 kA di cresta	• 100 kA x 1s • 250 kA di cresta

3.1.2 Condizioni ambientali

Categoria di sovratensione	OV4
Grado di inquinamento	PD4
Altitudine	<1000 s.l.m.
Temperatura di servizio	-10 °C +40 °C
Temperatura di trasporto e/o immagazzinaggio	-25 °C +70 °C
Umidità	<95%

3.1.3 Elenco componenti inviati

I DFM sono normalmente forniti interamente assemblati, meccanicamente funzionanti e testati elettricamente all' interno della fabbrica COET COSTRUZIONI ELETTROTECNICHE S.R.L. In base alla configurazione fatta per utilizzo specifico, il dispositivo assume dimensioni differenti

TENSIONE NOMINALE *Rated Voltage* kV	CORRENTE NOMINALE *Rated current* A	INGOMBRO "DFM" 1250-6000A / 3,6 kV-36kV / 1-3 POLI *Overall dimension "DFM" 1250-6000 / 3,6 kV-36kV /1-3 poles*											
		A	B	C	1P.	D 2P.	3.P	E	F	G	H	L	Q
3,6	1250	210	230	305	290	500	710	390	500	310	535	220	50
12		250	270	340		540	790	430	540	310	600	255	
24		370	350	435		660	1030	510	620	330	790	350	
36		500	500	520		790	1290	660	770	450	1010	435	
3,6	1600	210	230	305	290	500	710	390	530	310	555	220	50
12		250	270	340		540	790	430	570	310	620	255	
24		370	350	435		660	1030	510	650	330	805	350	
36		500	500	520		790	1290	660	800	450	1025	435	
3,6	2000	210	230	305	290	500	710	390	500	310	535	220	90
12		250	270	340		540	790	430	540	310	600	255	
24		370	350	435		660	1030	510	620	330	790	350	
36		500	500	520		790	1290	660	770	450	1010	435	
3,6	3000	210	230	305	290	500	710	390	530	310	555	220	90
12		250	270	340		540	790	430	570	310	620	255	
24		370	350	435		660	1030	510	650	330	805	350	
36		500	500	520		790	1290	660	800	450	1025	435	
3,6	4000	210	230	305	290	500	710	390	530	310	555	220	130
12		250	270	340		540	790	430	570	310	620	255	
24		370	350	435		660	1030	510	650	330	805	350	
36		500	500	520		790	1290	660	800	450	1025	435	
3,6	6000	280	230	305	370	650	930	390	530	350	555	-	210
12		320	270	340		690	1010	430	570	350	620	-	
24		450	350	435		820	1270	510	650	370	805	-	
36		-	500	520		-	-	660	800	490	1025	-	

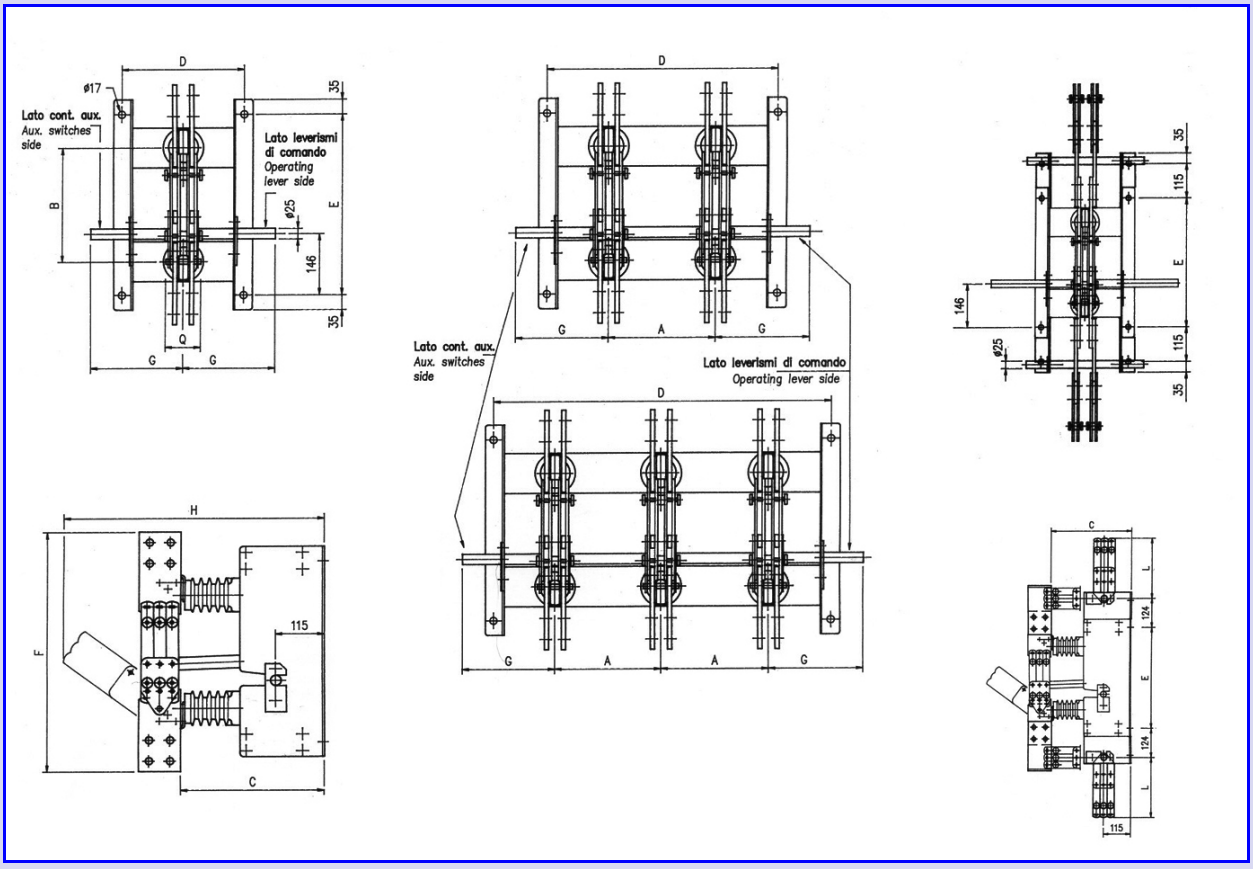

Esempio di misure d'ingombro DFM

Per le dimensioni specifiche del dispositivo fornito, si prega di contattare COET COSTRUZIONI ELETTROTECNICHE S.R.L

3.1.4 Liste ricambio

Questo elenco include tutti i componenti che hanno importanza strategica e / o difficile reperibilità, in caso di malfunzionamento, potrebbero comportare dei tempi di fermo eccessivi al dispositivo.
Un documento specifico relativo alle liste dei pezzi di ricambio è stato redatto aderendo a rigorosi criteri di selezione dati dalla nostra vasta esperienza

Descrizione componente
Contatti mobili completi di cerniere e bielle isolanti
Contatti fissi superiori, inferiori e di messa a terra (quando previsti)
Isolatori portanti o basette isolanti
Albero di comando completo di supporti
Manovra di azionamento completa e interblocchi
Comando motore completo (quando previsto)
Bobine di blocco e contatti ausiliari (quando previsti)

3.2 Trasporto e imballaggio

Deve essere riservata massima cura alle operazioni di sollevamento e posa in modo da evitare urti e vibrazioni. Deve essere predisposto un adeguato immagazzinaggio per preservare l'apparecchio da danneggiamenti.
Il montaggio in sito richiede una particolare cura dell'allineamento tra la parte superiore e il comando inferiore per evitare sforzi anomali. Il collegamento dei cavi di potenza dovrà essere fatto a regola d'arte con conduttori ben supportati e non gravanti con il loro peso o per sforzi elettrodinamici sui terminali di attacco.

ATTENZIONE! Per conservare in modo corretto il dispositivo, non si deve rimuovere l'imballaggio originale fino al momento dell'installazione.

3.2.1 Conservazione del dispositivo in caso di stoccaggio prolungato

ATTENZIONE! In caso di stoccaggio prolungato, si consiglia di riporre i dispositivi in un luogo asciutto, evitando, per quanto possibile, sbalzi bruschi di temperatura. Il deterioramento dell'imballaggio (tagli, perforazioni, ecc.) impedisce una corretta conservazione dei dispositivi prima dell'installazione.

COET COSTRUZIONI ELETTROTECNICHE S.R.L declina ogni responsabilità in caso di mancato rispetto di questa condizione.

3.2.2 Imballaggio

All'uscita dalla fabbrica i componenti sono imballati e protetti in modo adeguato al trasporto, la struttura e le parti elettriche, cavi compresi, sono adeguatamente protetti da eventuali eventi atmosferici e urti.
In base alla tipologia di utilizzo, di trasporto o per ragioni di ordine geografico , vengono effettuate differenti modi di imballaggio:

— imballo attraverso cellophane;
— imballo in modo rinforzato e protetto con sacco-barriera a protezione di eventuale umidità di condensa.

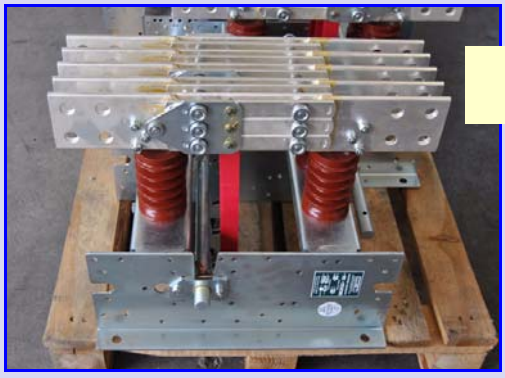

IMBALLO DFM: fornitura sciolta

Esempi imballaggio del dispositivo

Per entrambi i casi di imballaggio i dispositivi sono posti su un pallet e fissati tramite fermi.

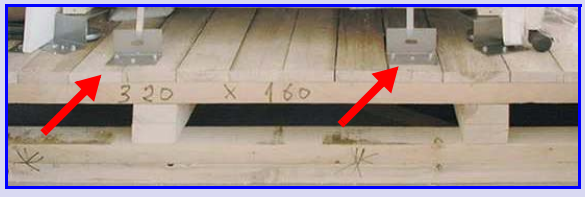

3.3 Sollevamento e movimentazione in sicurezza

ATTENZIONE! Per la fornitura sciolta non sono presenti punti di ancoraggio stabiliti! La movimentazione dovrà essere fatta manualmente dagli operatori (vedi "Sollevamento e movimentazione dal Pallet alla zona d'installazione (Tipologia DFM fornitura sciolta)" a pagina 14).

COET COSTRUZIONI ELETTROTECNICHE S.R.L declina ogni responsabilità in caso di mancato rispetto di questa condizione.

3.3.1 Sollevamento e movimentazione verticale - orizzontale

Una volta depositato il pallet, può essere più comodo movimentare separatamente i singoli componenti. Per questo, si possono già aprire gli imballaggi e separare tutti i suoi componenti accessori dal pallet.

Rimozione degli imballaggi (Tipologia imballo con cellophane)

- Con un cutter, tagliare l'involucro esterno in cellophane e rimuoverlo evitando di non danneggiare il dispositivo.

ATTENZIONE! Nella fase di disimballo, prestare la massima attenzione che i singoli componenti del dispositivo non vadano persi.

Rimozione degli imballaggi (Tipologia di imballo con cassa e sacco barriera)

- Aprire la cassa di legno togliendo prima la parte superiore. In seguito togliere i chiodi inferiori ed estrarre la cassa
- togliere la protezione in materiale plastico

ATTENZIONE! Nella fase di disimballo, prestare la massima attenzione che i singoli componenti del dispositivo non vadano persi.

Rimozione dei fermi del pallet

- Rimuovere dal pallet i fermi.

ATTENZIONE! Nella fase di disimballo, prestare la massima attenzione che i singoli componenti del dispositivo non vadano persi.

Sollevamento e movimentazione dal Pallet alla zona d'installazione (DFM interno all'apparecchiatura)

Maggiori informazioni sono contenute nel manuale specifico allegato alla documentazione.

Sollevamento e movimentazione dal Pallet alla zona d'installazione (Tipologia DFM fornitura sciolta)

Con l'intervento di più operatori,movimentare manualmente il carico con gradualità e senza strappi.

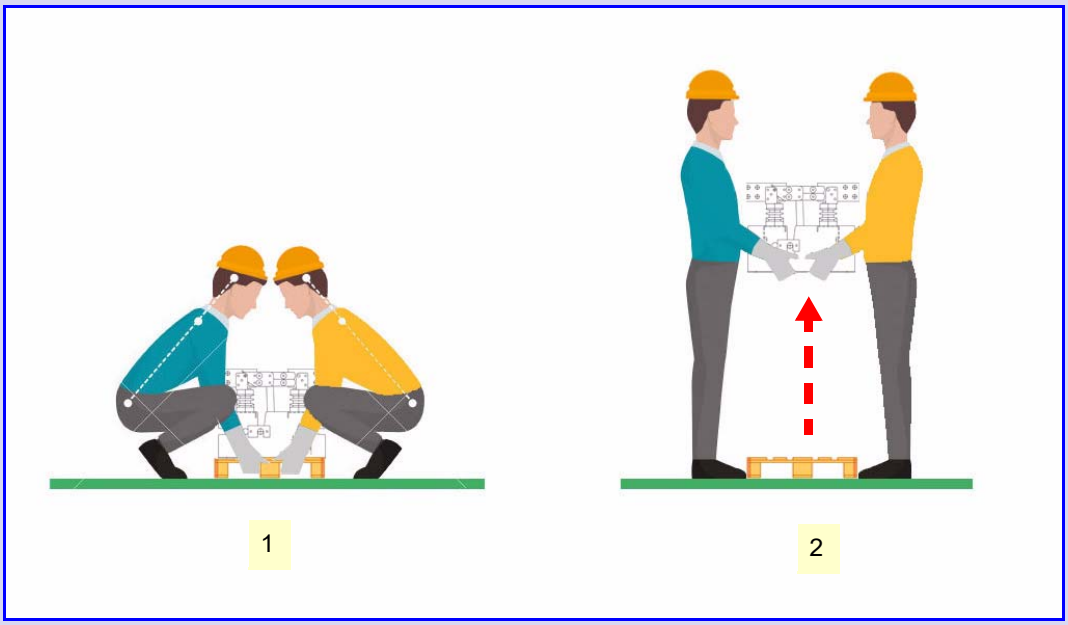

Sollevamento e movimentazione dal Pallet alla zona d'installazione (Tipologia DFM fornitura sciolta)

ATTENZIONE! Durante tutte le fasi di intervento sul dispositivo, sussiste un rischio residuo di entità minima che si verifichi la caduta di parti meccaniche od un urto accidentale contro il dispositivo, che può causare lesioni di lievi entità



3.4 Montaggio e controllo

3.4.1 Montaggio della messa in servizio (DFM interno apparecchiatura)

Maggiori informazioni sono contenute nel manuale specifico allegato alla documentazione.

3.4.2 Montaggio della messa in servizio (DFM fornitura sciolta)



Attenzione: accertarsi dell'effettiva assenza di tensione prima di avvicinarsi all'impianto. Prima di eseguire qualsiasi operazione, verificare che i contatti mobili siano nella posizione finale e che le molle del comando siano scariche.

Condizioni di perfetta installazione del dispositivo

— I sezionatori vengono normalmente forniti completamente montati e meccanicamente funzionanti; vengono forniti a parte, le aste di rinvio e gli organi di manovra.

— Il fissaggio dell'apparecchio deve essere fatto su superficie piana, utilizzando le forature poste sulla base di fissaggio del telaio; la posizione di fissaggio, se non specificato diversamente sul catalogo "FI", deve intendersi in verticale a parete; eventuali posizioni di fissaggio diverse devono essere preventivamente richieste e concordate prima dell'ordinazione in quanto possono risultare pericolose.

— Il montaggio di eventuali rinvii di manovra, tranne il caso di accordi particolari, deve essere corrispondente a quelli riportati sul catalogo "FI", curando in modo particolare la posizione e gli angoli di inclinazione delle leve di rinvio, per ottenere delle manovre corrette e complete.

— La regolazione della lunghezza delle aste di manovra può essere fatta, in base alla distanza della manovra, tramite l'apposita vite di regolazione inserita nell'asta.

— Al termine delle regolazioni per le manovre e dopo aver controllato il regolare funzionamento dell'apparecchio, eseguire una corretta spinatura delle leve, utilizzando le spine elastiche da 8mm fornite e rinforzandole con l'inserimento in queste, delle altre spine elastiche fornite da 5,5mm, oppure eseguendo un'ulteriore spinatura da 8mm nell'albero.

— L'apparecchio e tutti gli organi di manovra devono essere messi a terra con collegamento sicuro, dimensionato secondo le Norme CEI e comunque non inferiore a 30mm2. Per tale collegamento sull'apparecchio è predisposto un bullone apposito con l'indicazione del simbolo a norme CEI; in alternativa può comunque essere utilizzato uno dei fori di fissaggio del telaio, purchè questo non alteri la stabilità del fissaggio.

— Il collegamento dei circuiti principali (sbarre o cavi) dovrà essere fatto a regola d'arte, utilizzando bulloni che non sporgano troppo verso parti a massa o verso le altre fasi, con conduttori dimensionati in base alla corrente nominale d'esercizio; controllare in primo luogo la pulizia e la planarità delle superfici di contatto, inserendo quando necessario opportuni spessori fra le sbarre di collegamento ed i terminali, in modo da non deformare od alterare la loro posizione; applicare una idonea coppia di serraggio, evitando sollecitazioni anomale sui terminali dell'apparecchio.

— Al termine dei collegamenti verificare ogni parte dell'apparecchio per evidenziare possibili danneggiamenti ed eseguire manualmente alcune manovre, verificando che i contatti mobili si inseriscano ancora in modo corretto sui contatti fissi, senza eccessivi sforzi o disassamenti.

CAP. 4 FUNZIONAMENTO

I sezionatori SFI sono equipaggiati con contatti di fine corsa e blocchi a chiave per prevenire le manovre errate che potrebbero compromettere il funzionamento dell'apparecchio e la sicurezza del personale.

4.1 Funzionamento per la messa in sicurezza del dispositivo

La ricerca di tempi di manutenzione ridotti, uniti alla sicurezza degli operatori che devono intervenire in caso di guasti, ha portato alla realizzazione di comandi non più montati lateralmente al sezionatore, bensì direttamente sulla manovra d'emergenza manuale e quindi ad un'altezza ottimale per la segnlazione e la manutenzione.

Le possibili configurazioni di comandi sono:

— comando motorizzato
— comando pneumatico
— comando manuale

Di seguito vengono indicate alcune tipologie di esempio di comando motore e comando pneumatico per serie DFM.

Comando a motore con disinnesto a giunto frontale per comando di emergenza rinviato

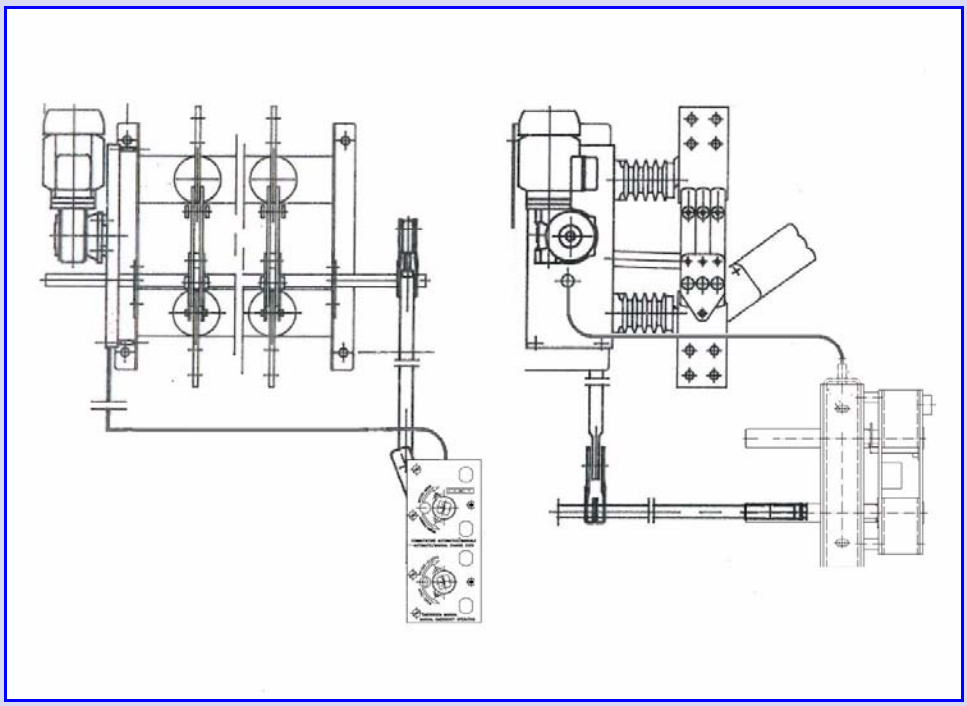

Comando a motore con semplice manovella di emergenza

Comando a motore con semplice manovella di emergenza

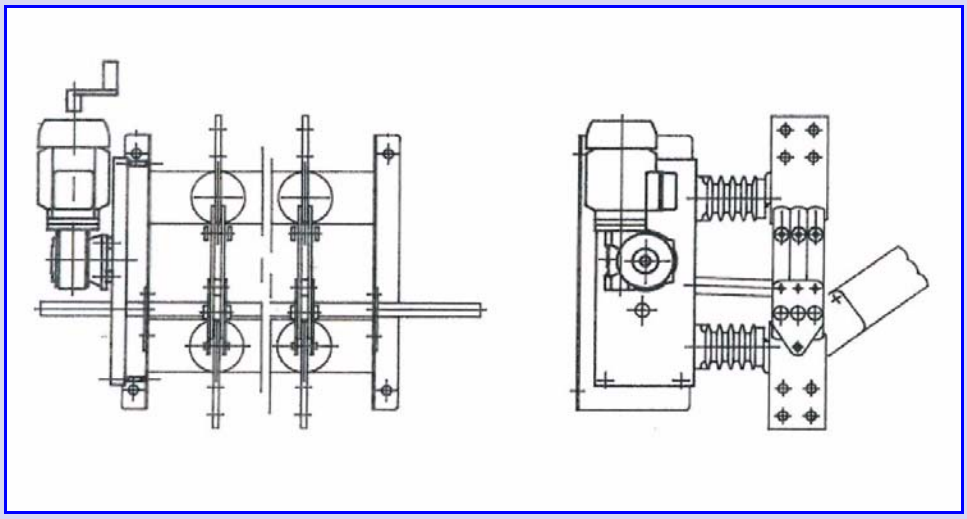

Comando a motore con semplice manovella di emergenza

Comando a motore tramite manovra Move

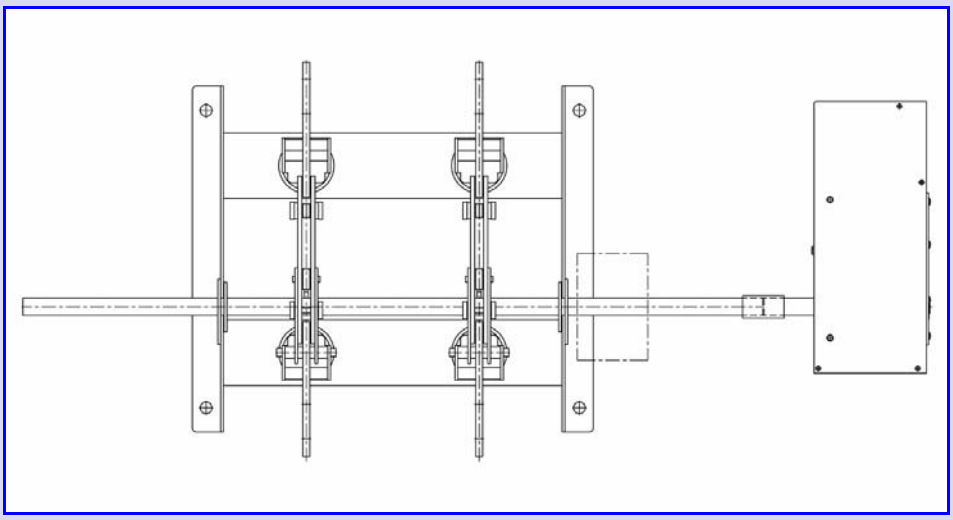

Comando a motore tramite manovra Move

Comando pneumatico

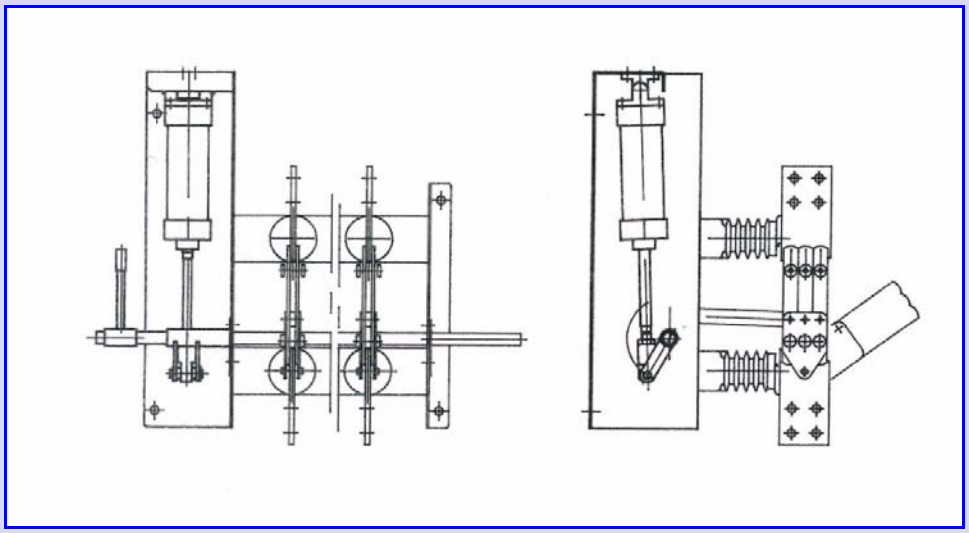

Comando a motore con semplice manovella di emergenza

Comando manuale con manovra tipo M1L

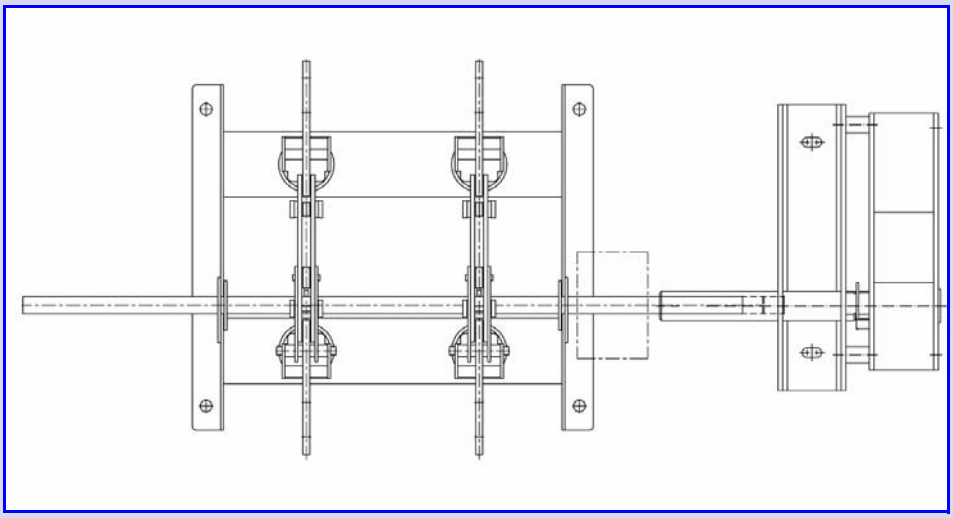

Comando manuale con manovra tipo M1L

4.1.1 Esempio di rinvio indiretto

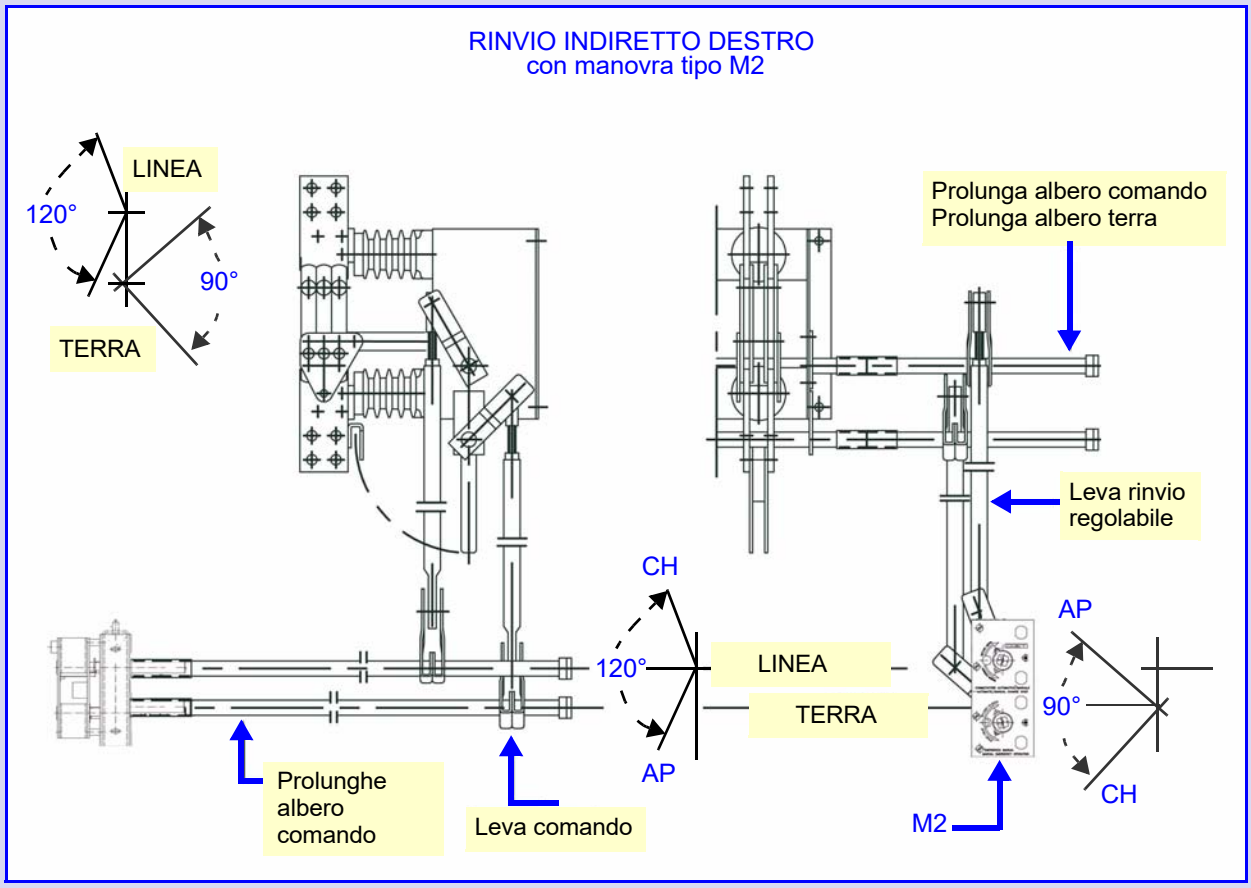

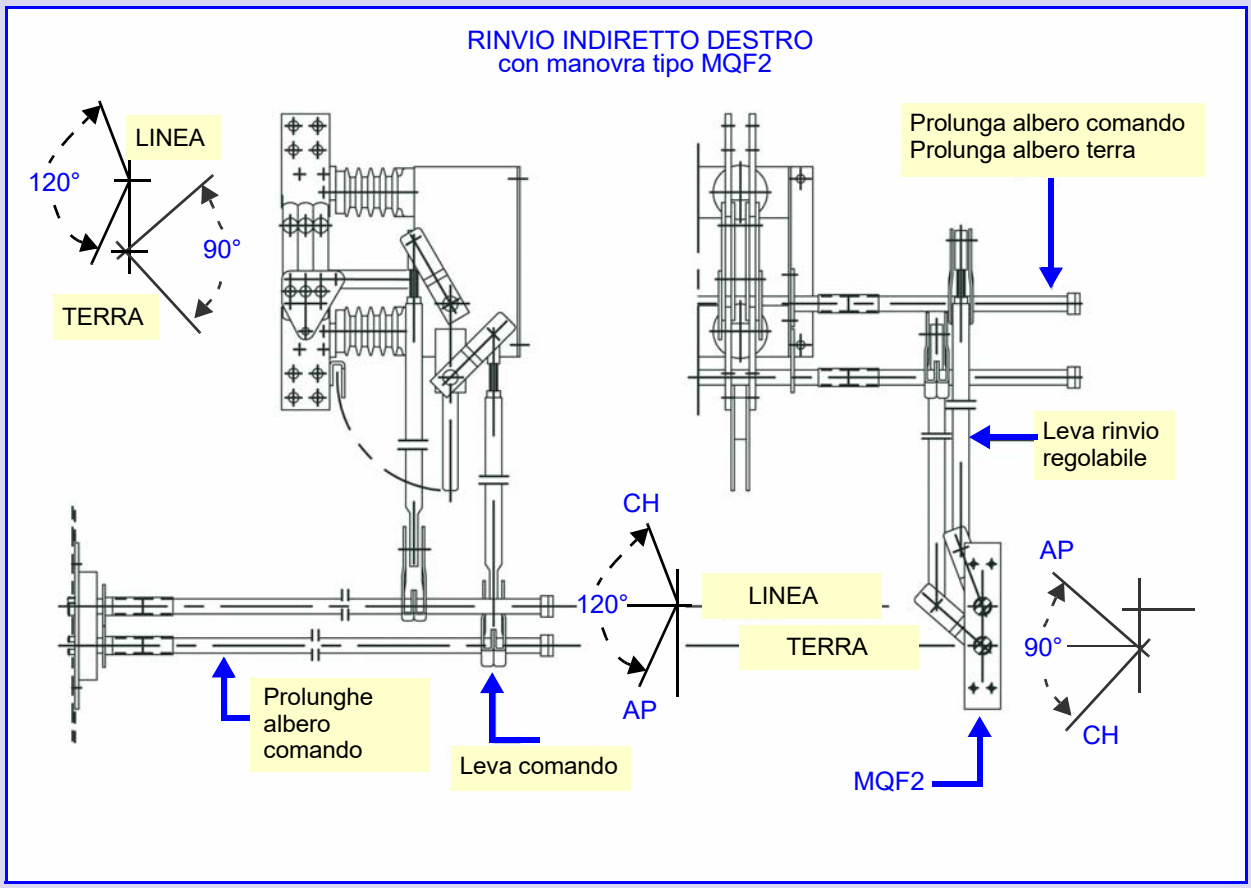

CAP. 5 MANUTENZIONE

Qualifica del personale di manutenzione

Qualifica	Personale
I	• specialista della manutenzione (manager e / o operativo)
II	• il supervisore di lavori di manutenzione e / o ingegnere di manutenzione
III	• persona responsabile del servizio con la funzione di manutenzione.

Operazioni preliminari di manutenzione

ATTENZIONE! Prima di procedere con le operazioni di manutenzione, assicurarsi che la cella sia isolata sia dal circuito in alternata che continua!! In questa condizione l'operatore lavora in piena sicurezza

COET COSTRUZIONI ELETTROTECNICHE S.R.L declina ogni responsabilità in caso di mancato rispetto di questa condizione.

5.1 Manutenzione preventiva

Per garantire nel tempo l'efficienza ottimale del dispositivo, si consiglia di effettuare regolarmente le operazioni di manutenzione, rispettando i tempi suggeriti. La maggior parte dei dispositivi installati e soggetti ad usura necessita di accurate operazioni di manutenzione, pertanto viene precisato un intervallo di tempo entro il quale effettuare le operazioni.

ATTENZIONE! COET COSTRUZIONI ELETTROTECNICHE S.R.L declina ogni responsabilità per danneggiamento a parti dovuto a manutenzione non correttamente eseguita o ad operazioni volte a modificare l'originale progetto del dispositivo.

Maggiori informazioni sono contenute nel "RAPPORTO DI MANUTENZIONE PREVENTIVA" (vedi CAP.7 - ALLEGATO 1).

5.2 Manutenzione correttiva

La manutenzione correttiva, è una politica di manutenzione che prevede un intervento di riparazione, sostituzione o revisione, solo a guasto avvenuto. L'azione manutentiva è quindi subordinata all'attesa del manifestarsi del guasto. A guasto avvenuto, viene preparato ed eseguito un intervento di "ripristino" che riporta la prestazione del sistema al livello iniziale.

Prima di procedere con la manutenzione correttiva, si consiglia di effettuare l'analisi dei guasti facendo riferimento al paragrafo dedicato di questo manuale

Maggiori informazioni sono contenute nel "RAPPORTO DI MANUTENZIONE CORRETTIVA" (vedi CAP.7 - ALLEGATO 2).

CAP. 6 ANALISI DEI GUASTI

Di seguito, viene fornita l'analisi dei guasti presenti sul dispositivo con le rispettive procedure d'intervento. In caso di ulteriori dubbi, si raccomanda di contattare il **Servizio Assistenza COET COSTRUZIONI ELETTROTECNICHE S.R.L**

Malfunzionamento	**Intervento**
Sezionatore a comando motorizzato e manuale risulta bloccato meccanicamente	procedere con la sostituzione
Sezionatore a comando motorizzato e manuale presenta un difetto dei circuiti ausiliari	procedere con la sostituzione
Interruttore di manovra-sezionatore a comando motorizzato e manuale presenta un difetto di isolamento verso massa (difetto su parti isolanti fra circuito e massa)	procedere con la sostituzione
Non entra la maniglia nella manovra del comando a motore	controllo musone, comando e interblocchi meccanici
Il motoriduttore risulta bruciato o bloccato quindi comando non funzionante	sostituzione del motore

CAP. 7 ALLEGATI

7.1 Allegato 1

PREVENTIVE MAINTENANCE REPORT

RAPPORTO DI MANUTENZIONE PREVENTIVA

NR..... **DATE:...../...../.....**

Project Information / Informazioni sul progetto

• **Serial Number/** Numero di serie • **Customer Name/** Cliente • **Project Name/** Impianto • **Costruction year/** Anno di costruzione / • **Product Code /** Codice Prodotto • **Product Type/** Tipologia di Prodotto	_____ _____ _____ _____ _____ _____

Technical Specifications / Specifiche Tecniche

• **Rated Voltage (rms)/** Tensione nominale	_____ kV 50/60 Hz
• **Operation Voltage /** Tensione di funzionamento	_____ kV 50/60 Hz
• **Rated Current (rms) /** Corrente nominale	_____ A
• **Short Circuit Current /** Corrente di corto circuito	_____ kA
• **Duration of Short Circuit Current /** Durata della Corrente di corto circuito	_____seconds
• **Auxiliary Circuit Voltage /** Tensione circuito ausiliario	_____ Vac / Vdc
• **Motor Voltage /** Tensione Motore	_____ Vac / Vdc

Tests and inspections / Prove e ispezioni.

Component / Componente	**Manual command** / Comando dell'apparecchio manuale
Maintenance activity / Operazione di manutenzione	**Screw tightening /** serraggio viti
Preventive maintenance activity / Tipo di manutenzione	**Periodically /** Periodica
Maintenance cycle time / Intervallo di tempo	**Annual /** Annuale
Maximum number of operation / N° di manovre	1000
Personnel / Personale	I
Tools and instruments / Utensili	**Adjustable or box wrench (8-24mm);Flat and crosshead screwdrivers; Socket head wrench 3 ÷ 6 mm /** Corredo Chiavi fisse o poligonali da 8 a 24mm; Cacciaviti con lama a taglio e a croce; Brugole 3 ÷ 6 mm
Maintenance / Intervento di manutenzione	**DONE** ESEGUITO  **NOT DONE** NON ESEGUITO 
Corrective Actions and Other Applications / Azioni correttive	....

.

Component / Componente	**Complete manual command /** Manovra manuale completa
Maintenance activity / Operazione di manutenzione	**Check mechanical and elettrical interlocks (5 operation test); deformation (visual inspection) /** Funz. interblocchi meccanici ed elettrici (esecuzioni 5 manovre!),deformazioni (visivo)
Preventive maintenance activity / Tipo di manutenzione	**Periodically /** Periodica
Maintenance cycle time / Intervallo di tempo	**Annual /** Annuale
Maximum number of operation / N° di manovre	1000
Personnel / Personale	I
Tools and instruments / Utensili	**Adjustable or box wrench (8-24mm);Flat and crosshead screwdrivers; Socket head wrench 3 ÷ 6 mm /** Corredo Chiavi fisse o poligonali da 8 a 24mm; Cacciaviti con lama a taglio e a croce; Brugole 3 ÷ 6 mm
Maintenance / Intervento di manutenzione	**DONE** ESEGUITO  **NOT DONE** NON ESEGUITO 
Corrective Actions and Other Applications / Azioni correttive	....

Component / Componente	**Bearing insulators** / Isolatori portanti
Maintenance activity / Operazione di manutenzione	**Cleaning;Cracking (visual inspection) /** Pulizia;incranature (visivo)
Preventive maintenance activity / Tipo di manutenzione	**Periodically /** Periodica
Maintenance cycle time / Intervallo di tempo	**Annual /** Annuale
Maximum number of operation / N° di manovre	1000
Personnel / Personale	I
Tools and instruments / Utensili	**rags and grease /** stracci e grasso
Maintenance / Intervento di manutenzione	**DONE** ESEGUITO  **NOT DONE** NON ESEGUITO 
Corrective Actions and Other Applications / Azioni correttive	....

Component / Componente	**Insulating connecting rods /** Bielle isolanti
Maintenance activity / Operazione di manutenzione	**Wear/craks (visual) /** Usure/incrinature(visivo)
Preventive maintenance activity / Tipo di manutenzione	**Periodically /** Periodica
Maintenance cycle time / Intervallo di tempo	**Annual /** Annuale
Maximum number of operation / N° di manovre	1000
Personnel / Personale	I
Tools and instruments / Utensili	**rags and grease /** stracci e grasso
Maintenance / Intervento di manutenzione	**DONE** ESEGUITO  **NOT DONE** NON ESEGUITO 
Corrective Actions and Other Applications / Azioni correttive	....

Component / Componente	**Main contacts /** Contatti principali
Maintenance activity / Operazione di manutenzione	**Wear on contact zones (visual); cleaning and greasing /** Usura zone di contatto (visivo); pulizia e ingrassaggio
Preventive maintenance activity / Tipo di manutenzione	**Periodically /** Periodica
Maintenance cycle time / Intervallo di tempo	**Annual /** Annuale
Maximum number of operation / N° di manovre	1000
Personnel / Personale	I
Tools and instruments / Utensili	**rags and grease /** stracci e grasso
Maintenance / Intervento di manutenzione	**DONE** ESEGUITO  **NOT DONE** NON ESEGUITO 
Corrective Actions and Other Applications / Azioni correttive	....

Component / Componente	**Connection bars** / Sbarrature di collegamento
Maintenance activity / Operazione di manutenzione	**Tightening of the connections and insualting supports /** Serraggio delle connessioni e supporti isolanti
Preventive maintenance activity / Tipo di manutenzione	**Periodically /** Periodica
Maintenance cycle time / Intervallo di tempo	**Every 6 years/** Ogni 6 anni
Maximum number of operation / N° di manovre	-
Personnel / Personale	I
Tools and instruments / Utensili	**Fixed wrenches: 13, 17, 19 e 24mm /** Chiavi fisse: 13, 17, 19 e 24mm
Maintenance / Intervento di manutenzione	**DONE** ESEGUITO  **NOT DONE** NON ESEGUITO 
Corrective Actions and Other Applications / Azioni correttive	....

Component / Componente	**Microswitches**
Maintenance activity / Operazione di manutenzione	**electrical connections; operation of device fastenings; position /** collegamenti elettrici;funzionamento fissaggio all'apparecchio;posizione
Preventive maintenance activity / Tipo di manutenzione	**Periodically /** Periodica
Maintenance cycle time / Intervallo di tempo	**Annual /** Annuale
Maximum number of operation / N° di manovre	-
Personnel / Personale	I
Tools and instruments / Utensili	**Flat and crosshead screwdriver; Fixed or pipe wrench 7mm; Hex key 3 mm /** Cacciaviti isolanti con lama a croce;Chiavi fisse o a tubo da 7mm;Brugola 3 mm
Maintenance / Intervento di manutenzione	**DONE** ESEGUITO  **NOT DONE** NON ESEGUITO 
Corrective Actions and Other Applications / Azioni correttive	....

Date / Data	**Technical /** Tecnico	**Signature /** Firma
..... /...../.....	....	....

7.2 Allegato 2

CORRECTIVE MAINTENANCE REPORT

RAPPORTO DI MANUTENZIONE CORRETTIVA

NR..... **DATE:**...../...../.....

Project Information / Informazioni sul progetto

• **Serial Number/** Numero di serie • **Customer Name/** Cliente • **Project Name/** Impianto • **Costruction year/** Anno di costruzione / • **Product Code /** Codice Prodotto • **Product Type/** Tipologia di Prodotto	_____ _____ _____ _____ _____ _____

Technical Specifications / Specifiche Tecniche

• **Rated Voltage (rms)/** Tensione nominale • **Operation Voltage /** Tensione di funzionamento • **Rated Current (rms) /** Corrente nominale • **Short Circuit Current /** Corrente di corto circuito • **Duration of Short Circuit Current /** Durata della Corrente di corto circuito • **Auxiliary Circuit Voltage /** Tensione circuito ausiliario • **Motor Voltage /** Tensione Motore	_____ kV 50/60 Hz _____ kV 50/60 Hz _____ A _____ kA _____seconds _____ Vac / Vdc _____ Vac / Vdc

Tests and inspections / Prove e ispezioni

Component / Componente	**Motor driven and manual disconnector /** Sezionatore a comando motorizzato e manuale
Component function / Funzionalità componente	**disconnect the line /** sezionare la linea
Fault type / Modo guasto	**mechanically locked - fault on auxiliary circuits - insulation to earth fault (faults on insulated parts between circuit and earth) /** bloccato meccanicamente - difetto dei circuiti ausiliari - difetto di isolamento verso massa (difetto su parti isolanti fra circuito e massa)
Effects of the failure / Effetti del guasto	**disconnector does not operate /** sezionatore non manovra
Failure detection / Rilevazione del guasto	**Undiagnosable /** Non diagnosticabile
Duration / Durata	**Insulation (min) /** Isolamento (min): 5 **Replacement (min) /** Sostituzione (min): 30 **Test /** Prova (min):10
Personnel / Personale	I
Tools and instruments / Utensili	**8 to 24 mm open end or polygonal spanners- Screwdrivers /** Chiavi fisse o poligonali da 8 a 24 mm- Cacciaviti
Maintenance / Intervento di manutenzione	**DONE** ESEGUITO  **NOT DONE** NON ESEGUITO 
Corrective Actions and Other Applications / Azioni correttive	....

Component / Componente	**Control (both motor driven and manual) /** Comando (sia motorizzato che manuale)
Component function / Funzionalità componente	**operates the disconnector /** manovra il sezionatore
Fault type / Modo guasto	**the handle does not respond /** non entra la maniglia nella manovra
Effects of the failure / Effetti del guasto	-
Failure detection / Rilevazione del guasto	**Undiagnosable /** Non diagnosticabile
Duration / Durata	**Insulation (min) /** Isolamento (min): 5 **Replacement (min) /** Sostituzione (min): - **Test /** Prova (min):5
Personnel / Personale	I
Tools and instruments / Utensili	**8, 10, 13, 17 and 19 mm open end spanner- Screwdrivers /** Chiavi fisse 8,10,13,17 e 19 mm - Cacciaviti
Maintenance / Intervento di manutenzione	**DONE** ESEGUITO  **NOT DONE** NON ESEGUITO 
Corrective Actions and Other Applications / Azioni correttive	....

Component / Componente	**Control (both motor driven and manual) /** Comando (sia motorizzato che manuale)
Component function / Funzionalità componente	**operates the disconnector /** manovra il sezionatore
Fault type / Modo guasto	**gearmotor burnt or locked - command not operating /** motoriduttore bruciato o bloccato - comando non funzionante
Effects of the failure / Effetti del guasto	**Disconnector does not operate /** Sezionatore non manovra
Failure detection / Rilevazione del guasto	**Undiagnosable /** Non diagnosticabile
Duration / Durata	**Insulation (min) /** Isolamento (min): 5 **Replacement (min) /** Sostituzione (min): 10 **Test /** Prova (min):5
Personnel / Personale	I
Tools and instruments / Utensili	**8, 10, 13, 17 and 19 mm open end spanner- Screwdrivers /** Chiavi fisse 8,10,13,17 e 19 mm - Cacciaviti
Maintenance / Intervento di manutenzione	**DONE** ESEGUITO  **NOT DONE** NON ESEGUITO 
Corrective Actions and Other Applications / Azioni correttive	....

Date / Data	**Technical /** Tecnico	**Signature /** Firma
..... /...../.....	....	....

SMALTIMENTO APPARECCHIATURE COET

Al termine del loro ciclo di vita, i dispositivi COET devono essere smaltiti in osservanza delle vigenti disposizioni di legge in materia di rifiuti e rispetto dell'ambiente.
I sistemi COET sono realizzati utilizzando differenti tipologie di materiali che, in caso di smaltimento, devono essere opportunamente separati ed avviati allo smaltimento differenziato.
Per ciascuna famiglia di materiale, la seguente lista individua il relativo codice identificativo del Catalogo Europeo dei Rifiuti (C. E. R.).

Tipologia di materiali utilizzati e loro smaltimento

La seguente lista contempla tutti i possibili materiali utilizzabili per la costruzione dei dispositivi COET.

Parti metalliche (~ 85%)

— ferro, acciaio: CER 17 04 05
— alluminio: CER 17 04 02
— rame, bronzo, ottone: CER 17 04 01

Parti non metalliche (~ 10 %)

— plastica: CER 17 02 03
— isolante in gomma: CER 17 06 04
— plexiglas: CER 07 02 13
— vetroresina: CER 17 06 04

Parti elettriche ed elettroniche (< 5%)

Rif.: Direttiva 2002/96/CE relativa ai rifiuti derivanti da apparecchiature elettriche ed elettroniche - RAEE.

— video HCD: CER 16 02 13
— schede elettroniche: CER 16 02 16
— neon: CER 20 01 21
— cavi: CER 17 04 11

Olii e grassi (< 0.01 %)

— grassi: CER 12 01 12

COME CONTATTARE IL SERVIZIO ASSISTENZA

Si raccomanda di contattare il **Servizio Assistenza COET COSTRUZIONI ELETTROTECNICHE S.R.L** solo dopo aver acquisito tutte le informazioni necessarie.
Questo ci permetterà di fornire un servizio rapido evitando spiacevoli incoveniente ed inutili perdite di tempo.

Dati tecnici e riferimenti

I dati tecnici e di riferimento si possono facilmente leggere sulla targhetta identificativa applicata sul dispositivo. Per identificare il dispositivo è necessario fornire all' assistenza il numero di matricola.

Guasti del dispositivo

In caso di fermo del dispositivo, per aiutarci a comprendere meglio quanto accaduto, è necessario fornirci una descrizione dettagliata del problema.

Per contattarci

Per contattare **COET COSTRUZIONI ELETTROTECNICHE S.R.L** comporre il numero: **(+39) 02 842934** e chiedere del Servizio Assistenza.
Oppure, via Fax, al numero **(+39) 02 5279753**

Oppure, via **e-email**, all' indirizzo : **coet@coet.it**



COET COSTRUZIONI ELETTROTECNICHE S.R.L. -

Via Civesio, 12 - 20097 San Donato Milanese (MI)

Italia

Tel +39 02 842934
Fax +39 02 5279753
email coet@coet.it

www.coet.it

3 606480 991455

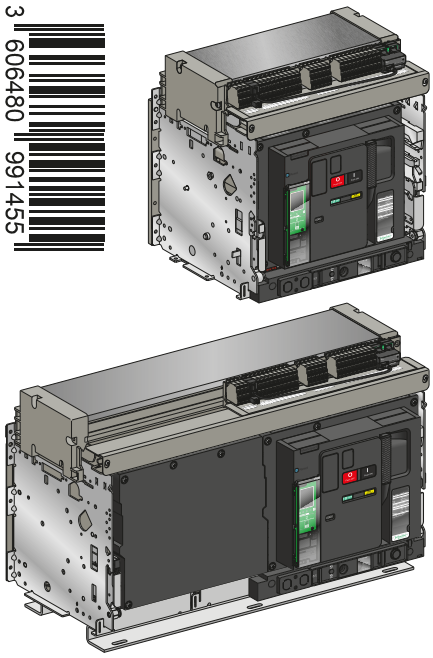

www.schneider-electric.com

UG Masterpact MTZ2/MTZ3	UG Micrologic X
en DOCA0101EN	en DOCA0102EN
fr DOCA0101FR	fr DOCA0102FR
es DOCA0101ES	es DOCA0102ES
zh DOCA0101ZH	zh DOCA0102ZH
MG Masterpact MTZ	
en DOCA0099EN	
fr DOCA0099FR	
es DOCA0099ES	
zh DOCA0099ZH	

en Drawout Circuit Breaker or Switch-Disconnector
fr Disjoncteur ou interrupteur débrochable
es Interruptor en carga o interruptor automático seccionable
de Einschubleistungsschalter oder Lasttrennschalter
it Interruttore estraibile o interruttore di manovra-sezionatore
pt Disjuntor extraível ou interruptor-seccionador
ru Выкатной автоматический выключатель или выключатель-разъединитель
zh 抽出式断路器或负荷开关

? → **www.schneider-electric.com > support >... / Schneider Electric Customer Support**

Retain instruction sheet for future use.
Visit our website at
www.schneider-electric.com
to download the documents listed above (user guides UG or maintenance guide MG) and other documents.

PLEASE NOTE
- Electrical equipment should be installed, operated, serviced, and maintained only by qualified personnel.
- No responsibility is assumed by
- Schneider Electric for any consequences arising out of the use of this material.
- All pertinent state, regional, and local safety regulations must be observed when installing and using this product.

Instruction de service à conserver pour usage ultérieur.
Visitez notre site web
www.schneider-electric.com
pour télécharger les documents listés ci-dessus (guide utilisateurs UG ou guide de maintenance MG) et d'autres documents.

REMARQUE IMPORTANTE
- L'installation, l'utilisation, la réparation et la maintenance des équipements électriques doivent être assurées par du personnel qualifié uniquement.
- Schneider Electric décline toute responsabilité quant aux conséquences de l'utilisation de ce matériel.
- Toutes les réglementations locales, régionales et nationales pertinentes doivent être respectées lors de l'installation et de l'utilisation de ce produit.

Guarde la hoja de instrucciones para utilizarla en el futuro.
Visite nuestra página web en
www.schneider-electric.com
para descargar los documentos enumerados anteriormente (manuales de usuario UG o manual de mantenimiento MG) así como otros documentos.

TENGA EN CUENTA
- La instalación, utilización, puesta en servicio y mantenimiento de equipos eléctricos deberán ser realizados sólo por personal cualificado.
- Schneider Electric no se hace responsable de ninguna de las consecuencias del uso de este material.
- Al instalar y utilizar este producto es necesario tener en cuenta todas las regulaciones sobre seguridad correspondientes, ya sean regionales, locales o estatales.

Bewahren Sie die Kurzanleitung als Referenz für den späteren Gebrauch auf.
Besuchen Sie unsere Website unter
www.schneider-electric.com,
um die oben aufgeführten Dokumente (Benutzerhandbücher UG oder Wartungshandbuch MG) und weitere Dokumente herunterzuladen.

BITTE BEACHTEN
- Elektrische Geräte dürfen nur von Fachpersonal installiert, betrieben, bedient und gewartet werden.
- Schneider Electric haftet nicht für Schäden, die durch die Verwendung dieses Materials entstehen.
- Bei der Montage und Verwendung dieses Produkts sind alle zutreffenden staatlichen, landesspezifischen, regionalen und lokalen Sicherheitsbestimmungen zu beachten.

Conservare questo foglio di istruzioni per un utilizzo futuro.
Visitate il nostro sito web
www.schneider-electric.com
per scaricare i documenti elencati sopra (Guide utente UG o Guida di manutenzione MG) e altri documenti.

NOTA
- Manutenzione, riparazione, installazione e uso delle apparecchiature elettriche si devono affidare solo a personale qualificato.
- Schneider Electric non si assume alcuna responsabilità per qualsiasi conseguenza derivante dall'uso di questo materiale.
- Durante l'installazione e l'uso di questo prodotto è necessario rispettare tutte le normative locali, nazionali o internazionali in materia di sicurezza.

Guarde a folha de instruções para utilização futura.
Visite o nosso site em
www.schneider-electric.com
para transferir os documentos indicados acima (manuais de utilizador UG ou manual de manutenção MG) e outros documentos.

NOTA
- A instalação, utilização e manutenção do equipamento eléctrico devem ser efectuadas exclusivamente por pessoal qualificado.
- A Schneider Electric não assume qualquer responsabilidade pelas consequências resultantes da utilização deste material.
- Todas as regulamentações de segurança pertinentes, sejam estatais, regionais ou locais, devem ser cumpridas na instalação e utilização deste produto.

Сохраните эту инструкцию для использования в будущем.
Посетите наш веб-сайт
www.schneider-electric.com
чтобы загрузить перечисленные выше руководства (руководства пользователей UG или руководства по техническому обслуживанию MG) и другие документы.

ОБРАТИТЕ ВНИМАНИЕ
- Установка, эксплуатация, ремонт и обслуживание электрического оборудования может выполняться только квалифицированными электриками.
- Компания Schneider Electric не несет никакой ответственности за любые возможные последствия использования данной документации.
- Во время установки и использования данного изделия следует соблюдать все действующие государственные, региональные и местные нормы и правила безопасности.

请保管好此说明书以供将来使用。
请访问网站 **www.schneider-electric.com** 以下载上述文件（用户指南 UG 或维护指南 MG）和其他文件。

请注意
- 电气设备的安装、操作、维修和维护工作
- 仅限于合格人员执行。
- **Schneider Electric** 不承担由于使用本资料所引起的 任何后果。
- 在安装和使用本产品时，必须遵守国家、地区和当地的所有相关的安全法规。

LV837801
NVE35470-02
09/2017

Schneider Electric

⚠ ⚠ DANGER / DANGER / PELIGRO / GEFAHR / PERICOLO / PERIGO / ОПАСНОСТЬ / 危险

HAZARD OF ELECTRIC SHOCK, EXPLOSION OR ARC FLASH

- Apply appropriate personal protective equipment (PPE) and follow safe electrical work practices. See NFPA 70E, CSA Z462, NOM 029-STPS or local equivalent.
- This equipment must only be installed and serviced by qualified electrical personnel.
- Turn off all power supplying this equipment before working on or inside equipment.
- Always use a properly rated voltage sensing device to confirm power is off.
- Replace all devices, doors, and covers before turning on power to this equipment.
- Beware of potential hazards, and carefully inspect the work area for tools and objects that may have been left inside the equipment.

Failure to follow these instructions will result in death or serious injury.

RISQUE D'ÉLECTROCUTION, D'EXPLOSION OU ÉCLAIR D'ARC ÉLECTRIQUE

- Portez un équipement de protection individuel (EPI) adapté et respectez les consignes de sécurité électrique courantes. Reportez-vous aux normes NFPA 70E, CSA Z462, NOM 029-STPS ou aux codes locaux en vigueur.
- Seul un personnel qualifié doit effectuer l'installation et l'entretien de cet équipement.
- Débranchez toutes les sources d'alimentation de cet équipement avant d'effectuer toute opération interne ou externe sur celui-ci.
- Utilisez toujours un dispositif de détection de tension ayant une valeur nominale appropriée pour vous assurer que l'alimentation est coupée.
- Replacez tous les dispositifs, les portes et les capots avant de mettre l'équipement sous tension.
- Faites attention aux dangers potentiels et inspectez attentivement la zone de travail pour vous assurer qu'aucun outil ou objet n'est resté à l'intérieur de l'équipement.

Si ces directives ne sont pas respectées, cela entraînera la mort ou des blessures graves.

PELIGRO DE DESCARGA ELÉCTRICA, EXPLOSIÓN O DESTELLO POR ARQUEO

- Utilice equipo de protección personal (EPP) apropiado y siga las prácticas de seguridad eléctricos establecidas. Consulte las normas NFPA 70E, CSA Z462, NOM-029-STPS u otros códigos locales correspondientes.
- Solamente el personal eléctrico calificado deberá instalar y prestar servicio de mantenimiento a este equipo.
- Desconecte todas las fuentes de alimentacion del equipo antes de realizar cualquier trabajo en él.
- Siempre utilice un dispositivo detector de tensión nominal adecuado para confirmar la desenergización del equipo.
- Vuelva a colocar todos los dispositivos, las puertas y las cubiertas antes de volver a energizar el equipo.
- Tenga cuidado con los riesgos potenciales, e inspeccione cuidadosamente la zona de trabajo para comprobar si han quedado herramientas y objetos dentro del equipo.

El incumplimiento de estas instrucciones provocará lesiones graves o incluso la muerte.

GEFAHR VON ELEKTRISCHEM SCHLAG, EXPLOSION ODER LICHTBOGEN

- Tragen Sie persönliche Schutzausrüstung (PSA) und befolgen Sie sichere Verfahren im Umgang mit Elektrogeräten. Siehe NFPA 70E, CSA Z462, NOM 029-STPS oder lokale Entsprechung.
- Diese Geräte dürfen nur von qualifizierten Elektrikern installiert und gewartet werden.
- Schalten Sie vor Arbeiten am bzw.2 im Innern des Geräts die gesamte Spannungsversorgung ab.
- Verwenden Sie für die Prüfung vorhandener Spannung stets einen Spannungsfühler mit zutreffender Bemessungsspannung.
- Bringen Sie alle Vorrichtungen, Türen und Abdeckungen wieder an, bevor Sie das Gerät einschalten.
- Beachten Sie potenzielle Gefahren, und überprüfen Sie den Arbeitsbereich auf Werkzeuge und andere Gegenstände, die sich möglicherweise noch in der Anlage befinden.

Die Nichtbeachtung dieser Anweisungen führt zu Tod oder schweren Verletzungen.

RISCHIO DI FOLGORAZIONE, ESPLOSIONI O ARCO ELETTRICO

- Utilizzare dispositivi di protezione individuale (DPI) idonei e adottare misure di sicurezza adeguate per lavori elettrici. Vedere le normative NFPA 70E, CSA Z462, NOM 029-STPS o le norme equivalenti nel paese di installazione.
- Installazione e manutenzione di questa apparecchiatura si devono affidare solo ad elettricisti qualificati.
- Prima di lavorare con l'apparecchiatura o al suo interno isolare completamente l'alimentazione elettrica.
- Per verificare che l'alimentazione sia isolata usare sempre un rilevatore di tensione correttamente tarato.
- Sostituire dispositivi, sportelli e coperture prima di riaccendere l'alimentazione dell'apparecchiatura.
- Prestare attenzione a potenziali pericoli e ispezionare con attenzione l'area di lavoro per assicurarsi di non aver dimenticato utensili o altri oggetti all'interno dell'apparecchiatura.

Il mancato rispetto di queste istruzioni rovocherà morte o gravi infortuni.

RISCO DE ELECTROCUSSÃO, DE EXPLOSÃO, OU DE ARCO ELÉCTRICO

- Utilize equipamento de protecção pessoal (PPE) e siga os métodos de segurança eléctrica. Consulte NFPA 70E, CSA Z462, NOM 029-STPS ou o equivalente local.
- A instalação e manutenção deste equipamento só devem ser efectuadas por electricistas qualificados.
- Desligue todas as fontes de alimentação deste equipamento antes de trabalhar no equipamento ou no seu interior.
- Utilize sempre um dispositivo de detecção da tensão nominal adequada para confirmar se a alimentação está desligada.
- Substitua todos os dispositivos, portas e tampas antes de ligar a alimentação deste equipamento.
- Esteja atento a potenciais perigos e inspecione cuidadosamente a área de trabalho para se assegurar que não foram deixadas ferramentas e objectos no interior do equipamento.

A não observância destas instruções resultará em morte, ou ferimentos graves.

Опасность поражения электрическим током, взрыва или возникновения дуги

- Используйте подходящие средства индивидуальной защиты (СИЗ) и соблюдайте технику безопасности при электротехнических работах. См. NFPA 70E, CSA Z462, NOM 029-STPS или местный эквивалентный стандарт.
- Данное оборудование могут устанавливать и обслуживать только квалифицированные электрики.
- Отключите питание до начала работы снаружи или внутри оборудования.
- Всегда пользуйтесь надлежащим датчиком номинального напряжения для определения отсутствия питания.
- Установите обратно все устройства, дверцы и крышки перед включением питания данного оборудования.
- Избегайте потенциальных опасностей, внимательно осмотрите рабочую область на наличие инструментов и предметов, которые могли остаться внутри оборудования.

Несоблюдение этих инструкций приведет к смерти или серьезной травме.

电击、爆炸或弧闪的危险

- 采用适当的个人防护设备 (PPE) 并遵循电气作业安全守则。请参阅 NFPA 70E, CSA Z462, NOM 029-STPS 或当地对应的标准。
- 只有具备相应资质的电气人员才能安装和维修该设备。
- 在该设备表面或内部工作之前，请关闭设备的全部电源。
- 确保使用合适的额定电压传感器确认电源已关闭。
- 更换所有设备、门和盖，然后再打开该设备的电源。
- 注意潜在危险，仔细检查作业区，以免将工具和物件遗忘在设备内部。

不遵循上述说明将导致人员伤亡。

Table of contents / Table des matières / Tabla de contenidos / Inhaltsverzeichnis / Indice / Índice / Содержание / 目录

1	**Contents / Contenu / Contenidos / Inhalt** **Sommario / Conteúdo / Содержимое /** 内容	5
2	**Necessary Tools / Outils nécessaires / Herramientas necesarias / Benötigte Werkzeuge /** **Strumenti necessari / Ferramentas necessárias / Необходимые инструменты /** 必需工具	5
3	**Description / Description / Descripción / Beschreibung /** **Descrizione / Descrição / Описание /** 描述	6
4	**Operation / Exploitation / Funcionamiento / Betrieb /** **Funzionamento / Funcionamento / Эксплуатация /** 操作	13
5	**Storage / Stockage / Almacenamiento / Lagerung /** **Conservazione / Armazenamento / Хранение /** 储存	21
6	**Unpacking / Déballage / Desembalaje / Auspacken /** **Disimballaggio / Desembalagem / Распаковка /** 开箱	22
7	**Handling / Manutention / Manipulación / Umgang /** **Movimentazione / Manuseamento / Погрузочно-разгрузочные работы /** 搬运	25
8	**Dimensions / Dimensions / Dimensiones / Abmessungen /** **Misure d'ingombro / Dimensões / Размеры /** 尺寸	27
9	**Before Working on Equipment / Avant de travailler sur cet équipement /** **Antes de trabajar en el equipo Vor Eingriffen am Gerät / Prima di operare sull'apparecchiatura /** **Antes de trabalhar no equipamento / До начала работы с оборудованием /** 设备操作前的准备工作	30
10	**Secure Chassis / Fixation du châssis / Asegúrese de que el chasis está sujeto /** **Sichern der Einschubkassette / Fissare il telaio / Fixar o chassis / Фиксация шасси /** 安全抽架	33
11	**Locking in Disconnected, Connected and Test Positions / Verrouillage en position débroché, embroché et test / Enclavamiento en posiciones desenchufado, enchufado y test / Verriegelung in Trenn-, Betriebs- und Teststellungen / Blocco nelle posizioni estratta, inserita e test / Bloqueio em posição desligada, ligada e teste / Блокировка в отсоединенном, подсоединенном и испытательном положениях /** 退出、连接和测试位置的锁定	35
12	**Installation Recommendations / Recommandations d'installation / Recomendaciones de instalación /** **Installationsempfehlungen / Consigli di installazione / Recomendações de instalação /** **Рекомендации по установке /** 安装建议	36
13	**Power Terminals / Raccordements de puissance / Bornes de potencia / Anschlussblöcke / Terminali di alimentazione / Terminais de / Клеммы питания /** 电源端子	39
14	**Interphase Barriers / Séparateurs de phases / Separadores de fase / Phasentrenner /** **Separatori di fase / Barreiras interfásicas / Межфазные перегородки /** 相间屏障	44

Table of contents / Table des matières / Tabla de contenidos / Inhaltsverzeichnis / Indice / Índice / Содержание / 目录

15	**Chassis Terminal Blocks / Borniers châssis / Terminales de chasis / Klemmen der Einschubkassette / Terminali telaio / Terminais do chassis / Клеммы шасси /** 抽架端子	**45**
16	**Terminal Blocks Installation and Wiring / Installation et câblage des borniers / Instalación y cableado del terminal / Klemmeminstallation und -verdrahtung / Installazione terminale e cablaggio / Instalação e ligação dos terminais / Установка и подключение клемм /** 端子安装和接线	**47**
17	**ULP Port Module Wiring / Câblage du module port ULP / Módulo de puerto ULP / ULP-Portmodul / Modulo porta ULP / Ligação do módulo da porta ULP / Модуль порта ULP / ULP** 端口模块	**49**
18	**Wiring Diagrams / Schémas de câblage / Esquemas eléctricos / Verdrahtungspläne / Schemi di cablaggio / Diagramas de ligação / Схемы подключения /** 接线图	**50**
19	**Chassis Removal / Démontage du châssis / Extracción del chasis / Entfernen der Einschubkassette / Rimozione telaio / Remoção do chassis / Демонтаж шасси /** 抽架拆卸	**57**
20	**Dielectric Test / Test diélectrique / Prueba dieléctrica / Dielektrizitätsprüfung / Test dielettrico / Teste dielétrico / Испытание на диэлектрическую прочность /** 介电测试	**58**
21	**Micrologic X Setting / Réglage du Micrologic X / Configuración de Micrologic X / Einstellung von Micrologic X / Impostazione Micrologic X / Definição Micrologic X / Настройка Micrologic X / Micrologic X** 设置	**59**
22	**Commissioning / Mise en service / Puesta en servicio / Inbetriebnahme / Messa in servizio / Comissionamento / Ввод в эксплуатацию /** 调试	**62**

1 Contents / Contenu / Estado / Inhalt / Contenuto / Índice / Содержание / 内容

1.1 Drawout Device Without Chassis / Appareil débrochable sans châssis / Aparato seccionable sin chasis / Einschubgerät ohne Einschubkassette / Dispositivo estraibile senza telaio / Dispositivo extraível sem chassis / Выкатной аппарат без шасси / 无抽架的抽出式设备

MTZ2 3P/4P

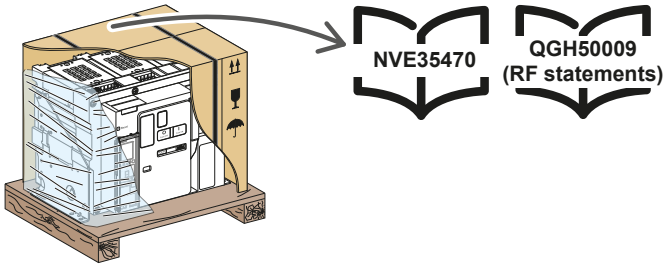

MTZ3 3P/4P

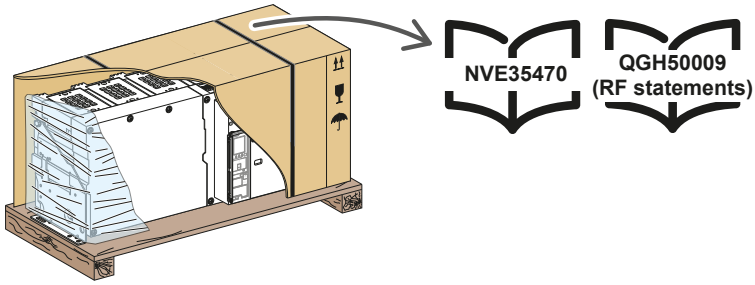

1.2 Chassis / Châssis / Chasis / Einschubkassette / Telaio / Chassis / Шасси / 抽架

MTZ2 3P/4P

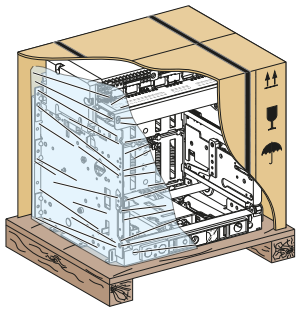

MTZ3 3P/4P

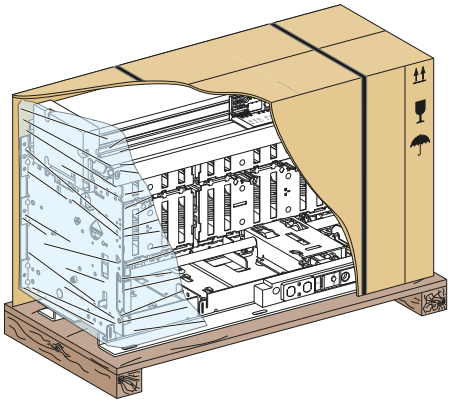

1.3 Drawout Device With Chassis / Appareil débrochable avec châssis / Aparato seccionable con chasis / Einschubgerät mit Einschubkassette / Dispositivo estraibile con telaio / Dispositivo extraível com chassis / Выкатной аппарат с шасси / 带抽架的抽出式设备

MTZ2 3P/4P

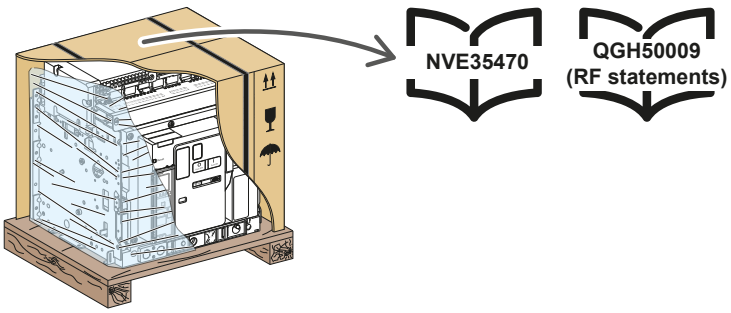

2 Necessary Tools / Outils nécessaires / Herramientas necesarias / Benötigte Werkzeuge / Strumenti necessari / Ferramentas necessárias / Необходимые инструменты / 必需工具

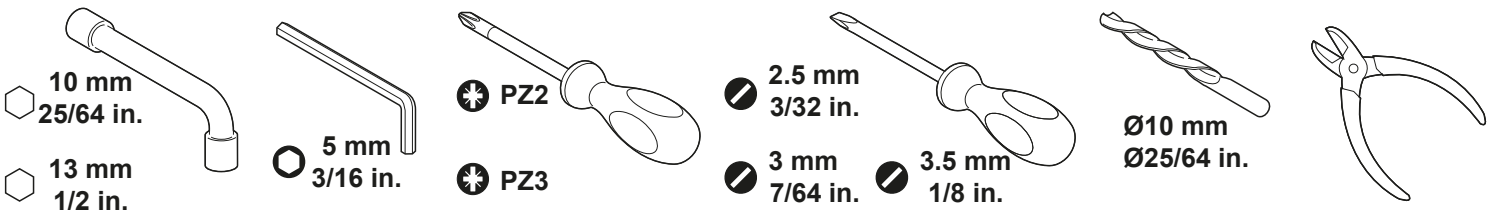

3 Description / Description / Descripción / Beschreibung / Legenda / Descrição / Описание / 描述

3.1 Device / Appareil / Aparato / Gerät / Dispositivo / Dispositivo / Аппарат / 设备

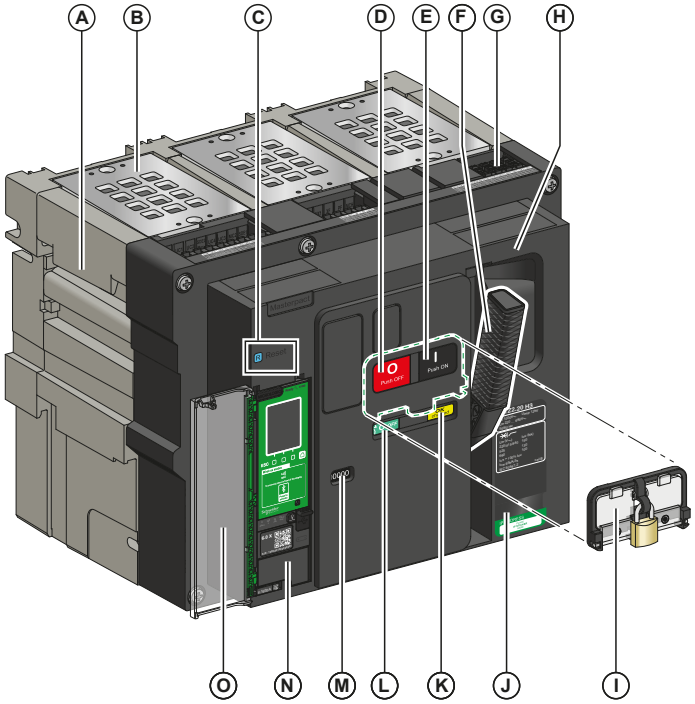

en
- **A** Carrying grip
- **B** Arc chute
- **C** Fault-trip reset button
- **D** Opening pushbutton
- **E** Closing pushbutton
- **F** Spring charging handle
- **G** Connectors for terminal blocks
- **H** Front cover
- **I** VBP Pushbutton locking cover (optional)
- **J** Rating plate
- **K** Spring charged and ready-to-close indicator
- **L** Main-contact position indicator
- **M** Window to consult the (optional) CDM mechanical operation counter
- **N** Control unit
- **O** Control unit transparent cover

fr
- **A** Poignée de manutention
- **B** Chambre de coupure
- **C** Bouton de réarmement après déclenchement
- **D** Bouton-poussoir d'ouverture
- **E** Bouton-poussoir de fermeture
- **F** Poignée d'armement
- **G** Connecteurs pour borniers
- **H** Capot
- **I** Condamnation des boutons-poussoirs VBP (en option)
- **J** Plaque de performance
- **K** Témoin du ressort d'accumulation d'énergie chargé et prêt à fermer
- **L** Témoin de position des contacts principaux
- **M** Fenêtre pour vérifier le compteur de manœuvres CDM (en option)
- **N** Unité de contrôle
- **O** Capot transparent de l'unité de contrôle

es
- **A** Empuñadura de maniobra
- **B** Cámara de corte
- **C** Botón de rearme después de defecto
- **D** Botón pulsador de apertura
- **E** Botón pulsador de cierre
- **F** Maneta de rearme del mando de cierre
- **G** Conectores de los borneros
- **H** Cubierta frontal
- **I** Cubierta de enclavamiento para botón pulsador VBP (opcional)
- **J** Placa de características
- **K** Testigo de muelle resorte cargado y preparado para cerrar
- **L** Testigo de posición de los contactos principales
- **M** Ventana para consultar el contador de maniobras CDM opcional
- **N** Unidad de control
- **O** Tapa transparente de la unidad de control

de
- **A** Tragegriff
- **B** Lichtbogenlöschkammer
- **C** Reset-Taste bei Fehlerauslösung
- **D** AUS-Taste
- **E** EIN-Taste / mechanischer Einschalttaster
- **F** Federspannhebel
- **G** Anschlüsse für Klemmleisten
- **H** Vorderseitige Abdeckung
- **I** VBP Abdeckung für die Verrieglung der Drucktaster (optional)
- **J** Leistungsschild
- **K** Feder gespannt und einschaltbereit Melder
- **L** Positionsanzeige des Hauptkontakts
- **M** Fenster zur Einsicht in den optionalen CDM Schaltspielzähler
- **N** Auslösesystem
- **O** Durchsichtige Abdeckung des Auslösesystem

it
- **A** Maniglia di trasporto
- **B** Camera d'interruzione
- **C** Pulsante di riarmo dopo sgancio per guasto
- **D** Pulsante di apertura
- **E** Pulsante di chiusura
- **F** Leva carica molla
- **G** Connettori per morsettiere
- **H** Coperchio frontale
- **I** Coperchio blocco pulsante VBP (opzionale)
- **J** Targa dati
- **K** Segnalazione molla carica e pronto a chiudere
- **L** Indicatore posizione contatto principale
- **M** Finestra per consultare il contamanovre CDM opzionale
- **N** Unità di controllo
- **O** Coperchio trasparente unità di controllo

pt
- **A** Alça de transporte
- **B** Câmara de extinção de arco
- **C** Botão de reset
- **D** Botão de abertura
- **E** Botão de fechamento
- **F** Alavanca de carregamento de mola
- **G** Conetores dos blocos de terminais
- **H** Tampa frontal
- **I** Tampa de bloqueio através de botão VBP (opcional)
- **J** Placa de dados
- **K** Indicador pronto a fechar e de mola carregada
- **L** Indicador de posição do contato principal
- **M** Janela para verificar o contador de manobras CDM opcional
- **N** Unidade de controle
- **O** Tampa transparente da unidade de controle

ru
- **A** Захват для переноски
- **B** Дугогасительная камера
- **C** Кнопка сброса аварийного отключения
- **D** Кнопка отключения
- **E** Кнопка включения
- **F** Рукоятка для взвода пружины
- **G** Разъемы для клеммников
- **H** Передняя крышка
- **I** Крышка для блокировки кнопок VBP (дополнительно)
- **J** Идентификационная панель
- **K** Указатель пружины взведены и готов к включению
- **L** Указатель положения главных контактов
- **M** Окно для просмотра дополнительного счетчика коммутаций CDM
- **N** Блок контроля и управления
- **O** Прозрачная крышка блока контроля и управления

zh
- **A** 搬运扶手
- **B** 灭弧栅
- **C** 故障脱扣复位按钮
- **D** 分闸按钮
- **E** 合闸按钮
- **F** 弹簧储能手柄
- **G** 端子板连接器
- **H** 前罩
- **I** VBP 按钮锁罩 （选配）
- **J** 铭牌
- **K** 弹簧储能和准备合闸 指示
- **L** 主触点位置指示
- **M** 查询选配 CDM 操作计数器的窗口
- **N** 控制单元
- **O** 控制单元透明罩

3.2 Device Accessories / Accessoires de l'appareil / Accesorios del aparato / Gerätezubehör / Accessori dispositivo / Acessórios do dispositivo / Вспомогательные устройства / 设备配件

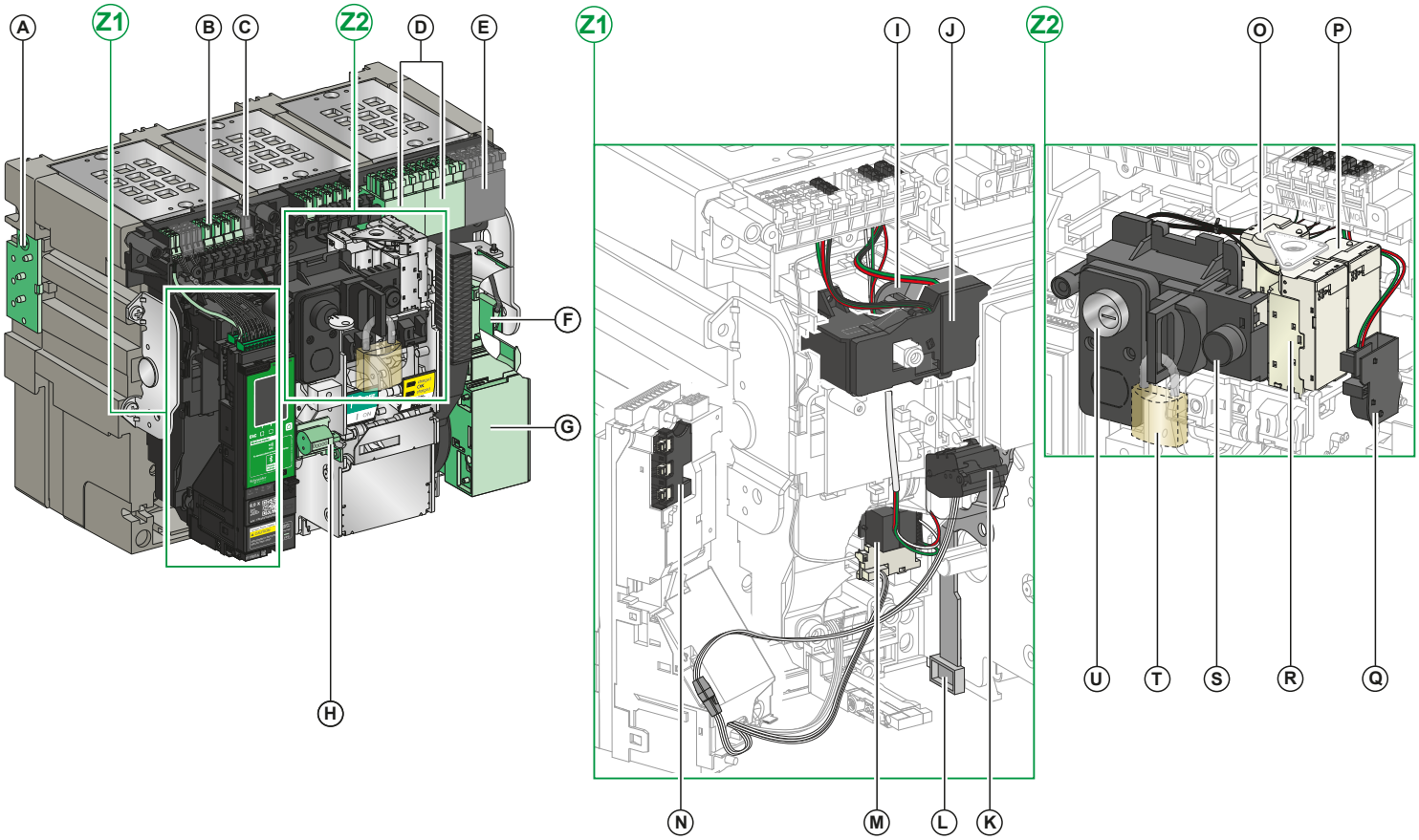

en

- **A** VDC mismatch protection (1)
- **B** Connectors for terminal blocks for optional accessories (1)
- **C** Connectors for terminal blocks for standard accessories
- **D** Optional block of four OF indication contacts or EF combined connected/closed contacts (1)
- **E** Standard block of four OF indication contacts
- **F** KMT grounding kit (1)
- **G** MCH gear motor (1)
- **H** CDM operation counter (1)

Z1

- **I** Standard SDE1 fault-trip indication contact
- **J** SDE2 fault-trip indication contact or RES electrical remote reset (1)
- **K** Microswitch
- **L** IBPO interlock between racking handle and opening pushbutton (1)
- **M** M2C programmable contacts (1) or ESM ERMS switch module (1)
- **N** Isolation module (1)

Z2

- **O** MN undervoltage release or MX2 opening voltage release (1)
- **P** MX1 opening voltage release (1)
- **Q** PF ready-to-close contact (1)
- **R** XF closing voltage release (1)
- **S** BPFE electrical closing pushbutton (1)
- **T** VCPO OFF-position locking by padlocks (1)
- **U** VSPO OFF-position locking by keylocks (1)

fr

- **A** Détrompeur VDC (1)
- **B** Connecteurs pour borniers pour accessoires en option (1)
- **C** Connecteurs pour borniers pour accessoires standard
- **D** Bloc en option de 4 contacts de signalisation OF ou contacts combinés embrochés/fermés EF (1)
- **E** Bloc standard de 4 contacts de signalisation OF
- **F** Kit de mise à la terre KMT (1)
- **G** Motoréducteur MCH (1)
- **H** Compteur de manœuvres CDM (1)

Z1

- **I** Contact de signalisation défaut électrique SDE1 standard
- **J** Contact de signalisation défaut électrique SDE2 ou réarmement à distance électrique RES (1)
- **K** Micro-interrupteur
- **L** Interverrouillage IBPO entre la manivelle et le bouton-poussoir d'ouverture (1)
- **M** Contacts programmables M2C (1) ou module commutateur pour ERMS ESM (1)
- **N** Module d'isolation (1)

Z2

- **O** Déclencheur voltmétrique à manque de tension MN ou déclencheur voltmétrique d'ouverture MX2 (1)
- **P** Déclencheur voltmétrique d'ouverture MX1 (1)
- **Q** Contact prêt à fermer PF (1)
- **R** Déclencheur voltmétrique de fermeture XF (1)
- **S** Bouton-poussoir de fermeture électrique BPFE (1)
- **T** Verrouillage en position ouvert du VCPO par cadenas (1)
- **U** Verrouillage en position ouvert du VSPO par serrures (1)

es

- **A** Dispositivo antierror VDC (1)
- **B** Conectores de los borneros para accesorios opcionales (1)
- **C** Conectores de los borneros para accesorios estándar
- **D** Bloque opcional de cuatro contactos de señalización OF o contactos conectados/cerrados combinados EF (1)
- **E** Bloque estándar de cuatro contactos de señalización OF
- **F** Kit de conexión a tierra KMT (1)
- **G** Motorreductor MCH (1)
- **H** Contador de maniobras CDM (1)

Z1

- **I** Contacto de señalización de defecto eléctrico SDE1 estándar
- **J** Contacto de señalización de defecto eléctrico SDE2 o rearme eléctrico a distancia RES (1)
- **K** Microinterruptor
- **L** Interenclavamiento IBPO entre la manivela y el botón pulsador de apertura (1)
- **M** Contactos programables M2C (1) o módulo de conmutación ESM ERMS (1)
- **N** Módulo de seccionamiento (1)

Z2

- **O** Bobina de disparo MN o bobina de apertura MX2 (1)
- **P** Bobina de apertura MX1 (1)
- **Q** Contacto preparado para cerrar PF (1)
- **R** Bobina de cierre XF (1)
- **S** Botón pulsador de cierre eléctrico BPFE (1)
- **T** Enclavamiento en posición abierto VCPO mediante candados (1)
- **U** Enclavamiento en posición abierto VSPO mediante cerraduras (1)

de

- **A** VDC Fehlanpassungsschutz (1)
- **B** Anschlüsse für Klemmleisten für optionales Zubehör (1)
- **C** Anschlüsse für Klemmleisten für Standardzubehör
- **D** Optionaler Baustein aus vier OF Anzeigekontakten (EIN/AUS) oder EF kombinierten Kontakten Betriebsstellung/EIN (1)
- **E** Standardbaustein aus vier OF Anzeigekontakten (EIN/AUS)
- **F** KMT-Erdungssatz (1)
- **G** MCH Getriebemotor (1)
- **H** CDM Schaltspielzähler (1)

Z1

- **I** Standard SDE1 Fernmeldeschalter
- **J** SDE2 Fernmeldeschalter oder RES ferngesteuerte elektrische Rückstellung (1)
- **K** Mikroschalter
- **L** IBPO Verriegelung zwischen Handkurbel und AUS-Taste (1)
- **M** Programmierbare Kontakte M2C (1) oder ESM-ERMS-Schaltmodul (1)
- **N** Isolationsmodul (1)

Z2

- **O** MN Unterspannungsauslöser oder MX2 Arbeitsstromauslöser (1)
- **P** MX1 Arbeitsstromauslöser (1)
- **Q** PF-Meldekontakt einschaltbereit (1)
- **R** XF Einschaltspule (1)
- **S** BPFE elektrischer Drucktaster (1)
- **T** VCPO AUS-Verriegelung mit Vorhängeschlössern (1)
- **U** VSPO AUS-Verriegelung mit Tastensperren (1)

(1) Optional / En option / Opcional / Optional / Opzionale / Opcional / Дополнительно / 选配

3.2 Device Accessories / Accessoires de l'appareil / Accesorios del aparato / Gerätezubehör / Accessori dispositivo / Acessórios do dispositivo / Вспомогательные устройства / 设备配件

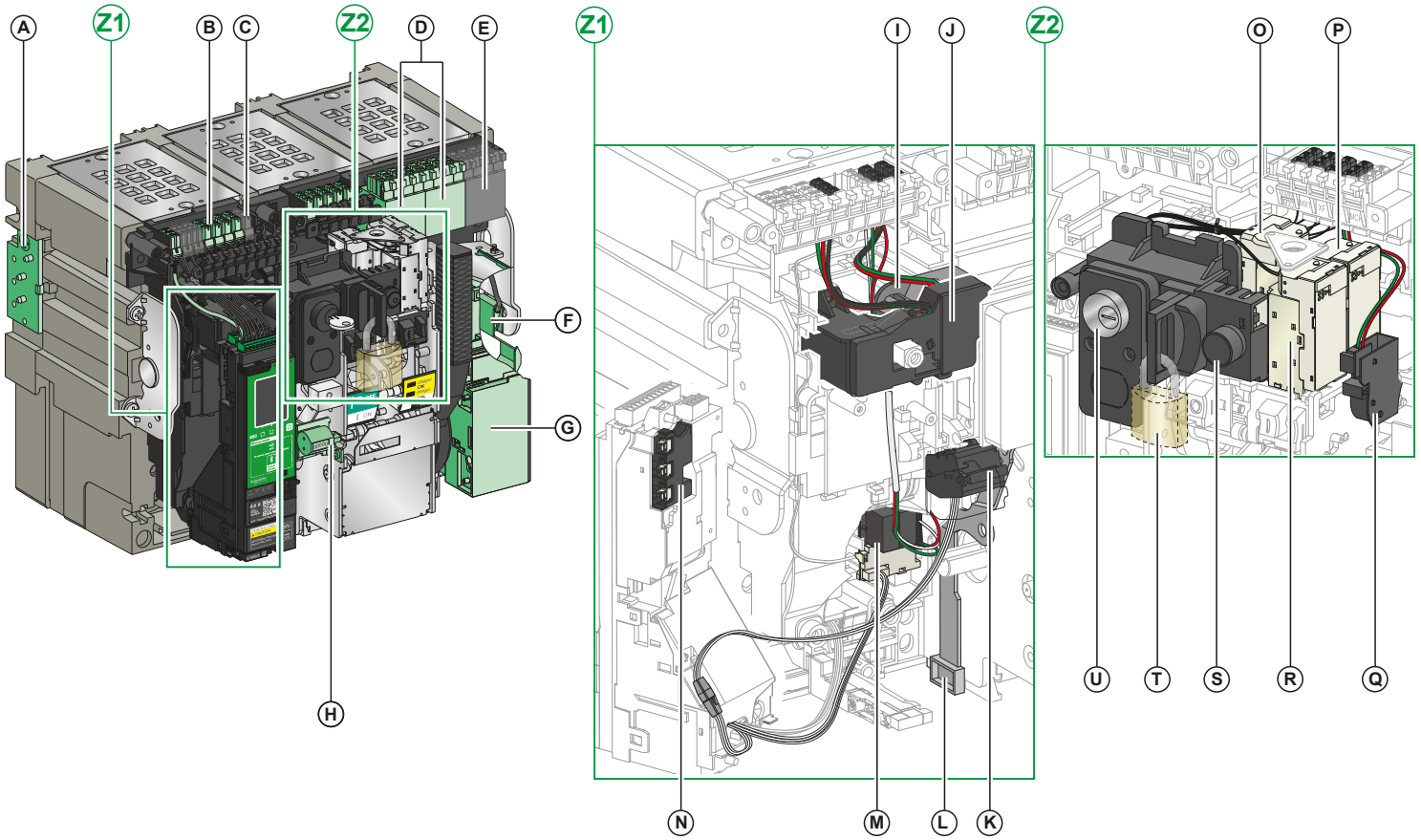

it

- **A** Blocco di inserzione (antisbaglio) VDC (1)
- **B** Connettori per morsettiere per accessori opzionali (1)
- **C** Connettori per morsettiere per accessori standard
- **D** Blocco opzionale di quattro contatti di segnalazione OF o contatti chiusi/connessi combinati EF (1)
- **E** Blocco standard di quattro contatti di segnalazione OF
- **F** Kit di messa a terra KMT (1)
- **G** Motoriduttore MCH (1)
- **H** Contamanovre CDM (1)

Z1

- **I** Contatto di segnalazione sgancio per guasto SDE1 standard
- **J** Contatto di segnalazione sgancio per guasto SDE2 o riarmo elettrico a distanza RES (1)
- **K** Microswitch
- **L** Interblocco IBPO tra leva di inserzione/estrazione e pulsante di apertura (1)
- **M** Contatti programmabili M2C (1) o modulo di commutazione ERMS ESM (1)
- **N** Modulo di isolamento (1)

Z2

- **O** Sganciatore di minima tensione MN o sganciatore voltmetrico di apertura MX2 (1)
- **P** Sganciatore voltmetrico di apertura MX1 (1)
- **Q** Contatto pronto alla chiusura PF (1)
- **R** Sganciatore voltmetrico di chiusura XF (1)
- **S** Pulsante di chiusura elettrica BPFE (1)
- **T** Blocco in posizione OFF VCPO con lucchetti (1)
- **U** Blocco in posizione OFF VSPO con serrature (1)

pt

- **A** Dispositivo contra enganos (VDC) (1)
- **B** Conetores dos blocos de terminais para acessórios opcionais (1)
- **C** Conetores dos blocos de terminais para acessórios padrão
- **D** Bloco opcional de quatro contatos de sinalização OF ou contatos ligados/fechados combinados de EF (1)
- **E** Bloco padrão de quatro contatos de sinalização OF
- **F** Kit de ligação à terra KMT (1)
- **G** Motorredutor MCH (1)
- **H** Contador de manobras CDM (1)

Z1

- **I** Painel de segurança SDE1 padrão
- **J** Contacto de sinalização de reset SDE2 ou reset elétrica RES (1)
- **K** Microinterruptor
- **L** Intertravamento IBPO entre a alavanca de inserção e o botão de abertura (1)
- **M** Contactos programáveis M2C (1) ou o módulo comutador ESM ERMS (1)
- **N** Módulo de isolamento (1)

Z2

- **O** Bobina de mínima tensão MN ou a bobina de abertura MX2 (1)
- **P** Bobina de abertura MX1 (1)
- **Q** Contato pronto a fechar PF (1)
- **R** Bobina de fechamento XF (1)
- **S** Botão de fechamento elétrico BPFE (1)
- **T** Bloqueio na posição DESLIGADO VCPO por cadeados (1)
- **U** Bloqueio na posição DESLIGADO VCPO por bloqueio por chave (1)

ru

- **A** Защита от несоответствия VDC (1)
- **B** Разъемы для клеммников для дополнительных вспомогательных устройств (1)
- **C** Разъемы для клеммников для стандартных вспомогательных устройств
- **D** Дополнительный клеммник для четырех контактов сигнализации OF или комбинированных контактов вкачено/включено (1)
- **E** Стандартный клеммник для четырех контактов сигнализации положения OF
- **F** Комплект заземления KMT (1)
- **G** Мотор-редуктор MCH (1)
- **H** Счетчик коммутаций CDM (1)

Z1

- **I** Стандартный контакт сигнализации электрического повреждения SDE1
- **J** Контакт индикации аварийного отключения SDE2 или дистанционный возврат в исходное положение RES (1)
- **K** Микровыключатель
- **L** Блокировка IBPO между рукояткой для вкатывания и кнопкой отключения (1)
- **M** Программируемые контакты M2C (1) или коммутационный модуль ESM ERMS (1)
- **N** Модуль изоляции (1)

Z2

- **O** Расцепитель минимального напряжения или расцепитель отключения MX2 (1)
- **P** Расцепитель отключения MX1 (1)
- **Q** Контакт готовности к включению PF (1)
- **R** Катушка включения XF (1)
- **S** Кнопка электрического включения BPFE (1)
- **T** Блокировка в положении отключено VCPO с помощью навесных замков (1)
- **U** Блокировка в положении отключено VSPO с помощью замков (1)

zh

- **A** VDC 失配保护 (1)
- **B** 选配件的 端子板连接器 (1)
- **C** 标准配件的 端子板连接器
- **D** 4 个 OF 指示触点的选配板或 EF 连接/合闸组合触点 (1)
- **E** 4 个 OF 指示触点的标准板
- **F** KMT 接地套件 (1)
- **G** MCH 储能马达 (1)
- **H** CDM 操作计数器 (1)

Z1

- **I** 标准 SDE1 故障脱扣指示 触点
- **J** SDE2 故障脱扣指示 触点或 RES 电气远程 复位 (1)
- **K** 微动开关
- **L** 摇进摇出手柄和分闸按钮 之间的 IBPO 联锁 (1)
- **M** M2C 可编程触点 (1) 或 ESM ERMS 开关模块 (1)
- **N** 隔离模块 (1)

Z2

- **O** MN 欠压线圈或 MX2 分励线圈 (1)
- **P** MX1 分励线圈 (1)
- **Q** PF 准备合闸触点 (1)
- **R** XF 合闸线圈 (1)
- **S** BPFE 电气合闸 按钮 (1)
- **T** VCPO OFF 位置锁，使用 挂锁 (1)
- **U** VSPO OFF 位置锁，使用 钥匙锁 (1)

(1) Optional / En option / Opcional / Optional / Opzionale / Opcional / Дополнительно / 选配

3.3 Chassis Standard Version / Châssis standard / Versión estándar de chasis / Standardversion der Einschubkassette / Versione standard telaio / Versão padrão do chassis / Стандартное исполнение шасси / 抽架标准版本

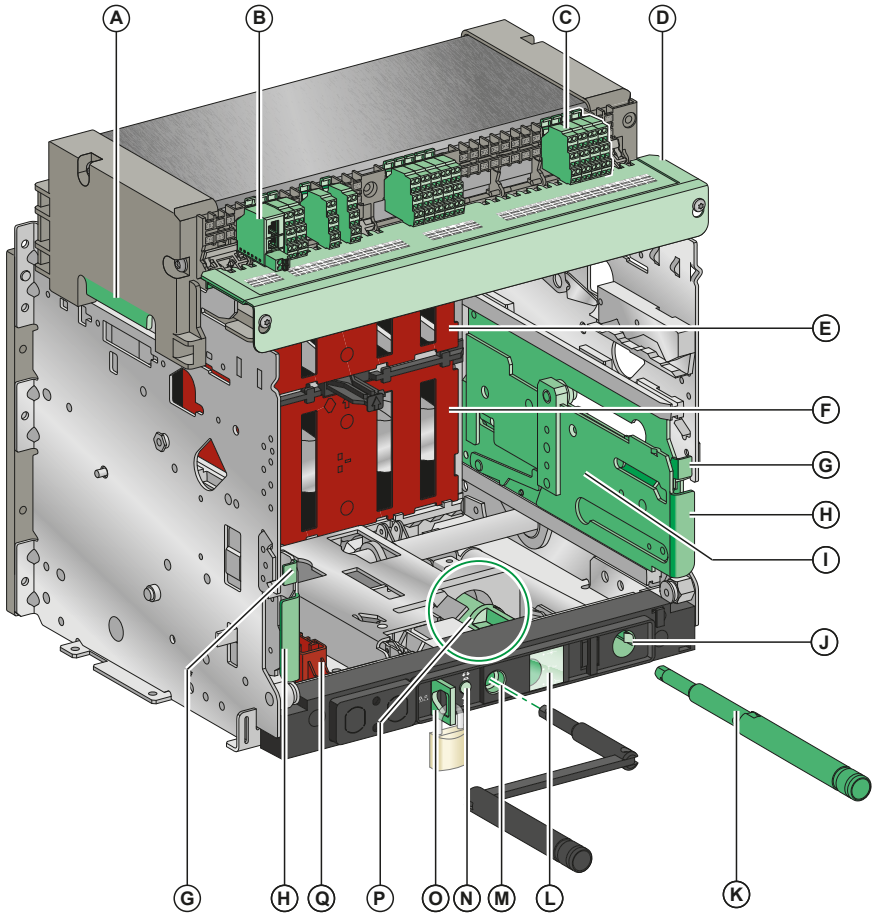

en
- **A** Carrying grip
- **B** ULP port module
- **C** Terminal blocks supplied as standard
- **D** Terminal block identification plate
- **E** Top safety shutter
- **F** Bottom safety shutter
- **G** Rail release tab
- **H** Drawout grip
- **I** Extension rail
- **J** Racking handle storage space
- **K** Racking handle
- **L** Position indicator
- **M** Racking handle socket
- **N** Position release button
- **O** Chassis locking by padlocks
- **P** Latch to lock the device in any position
- **Q** Shutter locking block

fr
- **A** Poignée de manutention
- **B** Module port ULP
- **C** Borniers livrés en standard
- **D** Plaque d'identification des borniers
- **E** Volet isolant supérieur
- **F** Volet isolant inférieur
- **G** Manette d'enclenchement des rails
- **H** Poignée d'extraction
- **I** Rail d'extension
- **J** Rangement de la manivelle
- **K** Manivelle
- **L** Témoin de position
- **M** Ouverture d'embrochage de la manivelle
- **N** Bouton-poussoir d'acquittement
- **O** Verrouillage du châssis par cadenas
- **P** Loquet pour verrouiller l'appareil dans une position donnée
- **Q** Sabot de verrouillage des volets

es
- **A** Empuñadura de maniobra
- **B** Módulo de puerto ULP
- **C** Borneros suministrados de serie
- **D** Placa de identificación del bornero
- **E** Pantalla aislante superior
- **F** Pantalla aislante inferior
- **G** Pulsador de la maneta
- **H** Empuñadura seccionable
- **I** Riel de extensión
- **J** Ubicación de la manivela
- **K** Manivela
- **L** Testigo de posición
- **M** Inserción de la manivela de enchufado
- **N** Botón pulsador de posición de desbloqueo
- **O** Enclavamiento del chasis mediante candados
- **P** Use el retén para enclavar el aparato en cualquier posición
- **Q** Cuña de enclavamiento

de
- **A** Tragegriff
- **B** ULP-Portmodul
- **C** Klemmleisten, standardmäßig im Lieferumfang enthalten
- **D** Typenschild der Klemmleiste
- **E** Obere Berührungsschutzklappen
- **F** Untere Berührungsschutzklappen
- **G** Schnappverschlüsse der Laufschienen
- **H** Einschubgriff
- **I** Erweiterungsschienen
- **J** Stauraum der Handkurbel
- **K** Handkurbel
- **L** Positionsanzeige
- **M** Handkurbelbuchse
- **N** Positionsentsperrungstaste
- **O** Verriegelung der Einschubkassette mit Vorhängeschlössern
- **P** Riegel zur Verriegelung des Geräts in jeglicher Position
- **Q** Verriegelung der Berührungsschutzklappen

it
- **A** Maniglia di trasporto
- **B** Modulo porta ULP
- **C** Morsettiere fornite come standard
- **D** Piastra di identificazione morsettiera
- **E** Otturatore di sicurezza superiore
- **F** Otturatore di sicurezza inferiore
- **G** Pulsante rilascio guida
- **H** Maniglia di estrazione
- **I** Guida di estensione
- **J** Sede di sistemazione leva
- **K** Leva di inserzione/estrazione
- **L** Indicatore di posizione
- **M** Apertura leva di inserzione/estrazione
- **N** Pulsante di rilascio posizione
- **O** Blocco telaio con serratura
- **P** Levetta per bloccare il dispositivo in qualsiasi posizione
- **Q** Blocco otturatori di sicurezza

pt
- **A** Alça de transporte
- **B** Módulo da porta ULP
- **C** Blocos de terminais providenciados como standard
- **D** Placa de identificação do adaptador de conversão
- **E** Persiana isolante superior
- **F** Persiana isolante inferior
- **G** Aleta de libertação de calha
- **H** Alça extraível
- **I** Calha de extensão
- **J** Espaço de armazenamento da manivela
- **K** Manivela
- **L** Indicador de posição
- **M** Entrada da manivela
- **N** Botão de posição
- **O** Bloqueio do chassis com cadeados
- **P** Patilha para bloquear o dispositivo em qualquer posição
- **Q** Trava móvel da persiana isolante

ru
- **A** Захват для переноски
- **B** Модуль порта ULP
- **C** Клеммные колодки поставляются стандартно
- **D** Табличка с паспортными данными клеммного блока
- **E** Верхняя изолирующая шторка
- **F** Нижняя изолирующая шторка
- **G** Запирающая пластинка для разблокировки салазок
- **H** Салазки для выкатывания
- **I** Выдвижная рейка
- **J** Отсек хранения рукоятки для вкатывания
- **K** Рукоятка для вкатывания
- **L** Указатель положения
- **M** Гнездо присоединения рукоятки для вкатывания
- **N** Кнопка квитирования положения
- **O** Блокировка шасси с помощью навесных замков
- **P** Защелка для блокировки аппарата в любом положении
- **Q** Блокировка защитных шторок

zh
- **A** 搬运扶手
- **B** ULP 端口模块
- **C** 标配端子块
- **D** 接线端子铭牌
- **E** 顶部安全挡板
- **F** 底部安全挡板
- **G** 轨道松开卡舌
- **H** 抽出握把
- **I** 延伸轨道
- **J** 摇进摇出手柄储存仓
- **K** 摇进摇出手柄
- **L** 位置指示
- **M** 摇进摇出手柄插孔
- **N** 位置释放按钮
- **O** 用挂锁锁定抽架
- **P** 将设备锁定在任何位置的 闩锁
- **Q** 挡板锁定装置

3.4 Chassis Optional Accessories / Accessoires optionnels du châssis / Accesorios opcionales del chasis / Optionales Zubehör der Einschubkassette / Accessori opzionali telaio / Acessórios opcionais do chassis / Дополнительные вспомогательные устройства шасси / 抽架选配件

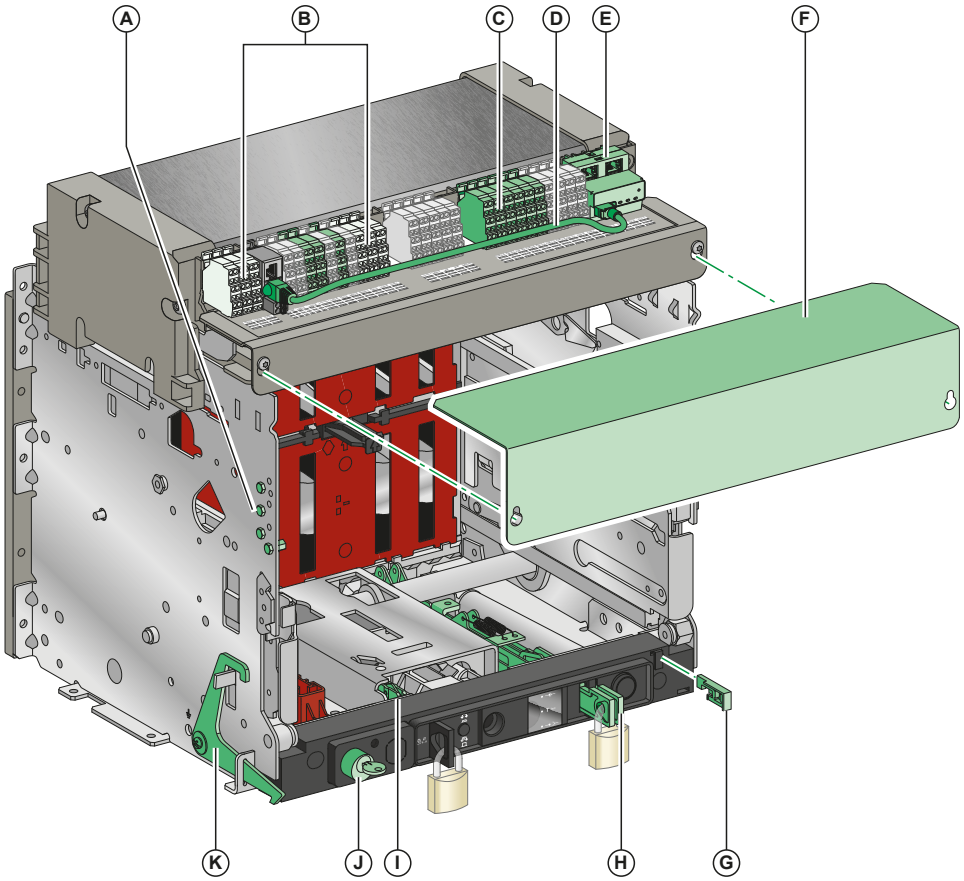

en
- **A** VDC mismatch protection
- **B** Drawout device position contacts
- **C** Optional terminal blocks
- **D** Cord between ULP port module and EIFE interface
- **E** EIFE embedded Ethernet interface
- **F** CB auxiliary terminal shield
- **G** VPOC racking interlock with door open
- **H** VIVC shutter position indication and locking
- **I** IBPO interlock between racking handle and opening pushbutton
- **J** VSPD chassis locking by keylocks
- **K** VPEC door interlock

fr
- **A** Détrompeur VDC
- **B** Contacts de position de l'appareil débrochable
- **C** Borniers en option
- **D** Câble reliant le module port ULP et l'interface EIFE
- **E** Interface Ethernet intégrée EIFE
- **F** Capot sur borniers fils fins CB
- **G** Verrouillage d'embrochage porte ouverte VPOC
- **H** Indicateur de position des volets et verrouillage
- **I** Interverrouillage IBPO entre la manivelle et le bouton-poussoir d'ouverture
- **J** Verrouillage du châssis VSPD par serrures
- **K** Verrouillage de porte VPEC

es
- **A** Dispositivo antierror VDC
- **B** Contactos de posición del aparato seccionable
- **C** Optional terminal blocks
- **D** Cable entre el módulo de puerto ULP e interfaz EIFE
- **E** Interfaz Ethernet incorporada EIFE
- **F** Tapa de la regleta de bornes CB
- **G** Enclavamiento de botón de apertura-acceso de la manivela con puerta abierta VPOC
- **H** Bloqueo e indicador de posición de la pantalla VIVC
- **I** Interenclavamiento IBPO entre la manivela y el botón pulsador de apertura
- **J** Enclavamiento del chasis VSPD mediante cerraduras
- **K** Enclavamiento de puerta VPEC

de
- **A** VDC Fehlanpassungsschutz
- **B** Positionskontakte des Einschubgeräts
- **C** Optionale Klemmleisten
- **D** Kabel zwischen ULP-Portmodul und EIFE-Schnittstelle
- **E** Integrierte Ethernet-Schnittstelle EIFE
- **F** CB-Abdeckung der Zubehöranschlussklemmen
- **G** VPOC Verriegelung der Kurbeleinführung mit geöffneter Tür
- **H** VIVC Positionsanzeige der Berührungsschutzklappen und Verriegelung
- **I** IBPO Verriegelung zwischen Handkurbel und AUS-Taste
- **J** VSPD Verriegelung der Einschubkassette mit Tastensperre
- **K** VPEC Türverriegelung

it
- **A** Blocco di inserzione (antisbaglio) VDC
- **B** Contatti posizione dispositivo estraibile
- **C** Morsettiere opzionali
- **D** Cavo tra modulo porta ULP e interfaccia EIFE
- **E** Interfaccia Ethernet integrata EIFE
- **F** Schermo di protezione morsettiera ausiliare CB
- **G** Blocco leva VPOC con porta aperta
- **H** Indicatore di posizione otturatore VIVC e blocco
- **I** Interblocco IBPO tra leva di inserzione/estrazione e pulsante di apertura
- **J** Blocco telaio VSPD con serratura
- **K** Interblocco porta VPEC

pt
- **A** Dispositivo contra enganos (VDC)
- **B** Contactos de posição do dispositivo extraível
- **C** Blocos de terminais opcionais
- **D** Cabo entre o módulo da porta ULP e a interface EIFE
- **E** Interface Ethernet EIFE integrada
- **F** Blindagem CB do terminal auxiliar
- **G** Interbloqueio de inserção VPOC com porta aberta
- **H** Indicação da posição da persiana VIVC e bloqueio
- **I** Intertravamento IBPO entre a alavanca de inserção e o botão de abertura
- **J** Bloqueio do chassis VSPD com bloqueio por chave
- **K** Intertravamento da porta VPEC

ru
- **A** Защита от несоответствия VDC
- **B** Контакты положения выкатного устройства
- **C** Дополнительные клеммные колодки
- **D** Кабель, соединяющий модуль порта ULP с интерфейсом EIFE
- **E** EIFE, встроенный интерфейс Ethernet
- **F** Кожух клеммника CB
- **G** Блокировка вкатывания VPOC с открытой дверцей
- **H** Индикатор и блокировка положения шторок VIVC
- **I** Блокировка IBPO между рукояткой для вкатывания и кнопкой отключения
- **J** VSPD, блокировка шасси с помощью замков
- **K** Блокировка двери VPEC

zh
- **A** VDC 失配保护
- **B** 抽出式设备位置触点
- **C** 选配端子块
- **D** ULP 端口模块与 EIFE 接口之间的连接线
- **E** EIFE 嵌入式以太网接口
- **F** CB 二次接线端子盖板
- **G** VPOC 进退联锁，门打开
- **H** VIVC 挡板位置指示 和锁
- **I** 摇进摇出手柄和分闸按钮 之间的 IBPO 联锁
- **J** 用钥匙锁锁定 VSPD 抽架
- **K** VPEC 门联锁装置

3.5 Rating Plate / Plaque de performance / Placa de características / Leistungsschild / Targa dati / Placa de dados / Идентификационная панель / 铭牌

en Circuit Breaker Rating Plate

fr Plaque de performance d'un disjoncteur

de Placa de características del interruptor automático

de Leistungsschild des Leistungsschalters

it Targa dati interruttore

pt Placa de dados do disjuntor

ru Идентификационная панель автоматического выключателя

zh 断路器铭牌

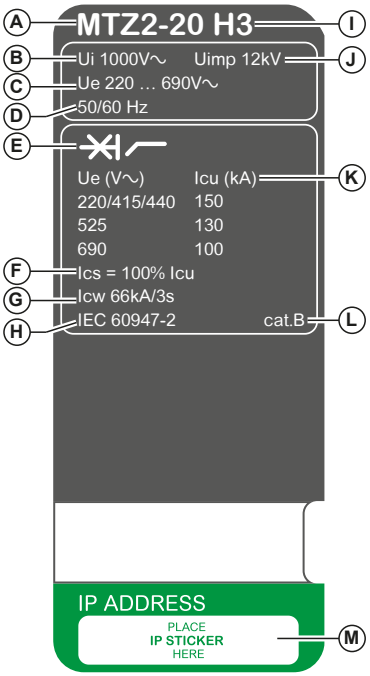

en Switch-Disconnector Rating Plate

fr Plaque de performance d'un interrupteur

de Placa de características del interruptor en carga

de Leistungsschild des Lasttrennschalters

it Targa dati interruttore di manovra-sezionatore

pt Placa de dados do interruptor-seccionador

ru Идентификационная панель выключателя-разъединителя

zh 负荷开关铭牌

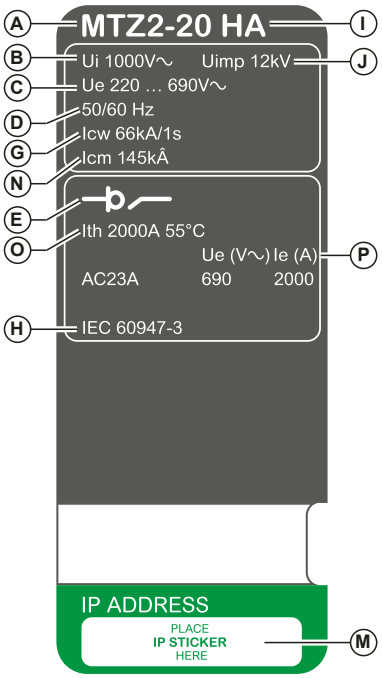

en
- **A** Device size and rated current x100 A
- **B** Ui: rated insulation voltage
- **C** Ue: rated operational voltage
- **D** Frequency
- **E** Type of device: circuit breaker or switch-disconnector, suitable for isolation
- **F** Ics: rated service short-circuit breaking capacity
- **G** Icw: rated short time withstand current
- **H** Standards
- **I** Performance level
- **J** Uimp: rated Impulse withstand voltage
- **K** Icu: rated ultimate short-circuit breaking capacity
- **L** Selectivity category
- **M** Place for IP address sticker
- **N** Icm: rated short-circuit making capacity
- **O** Ith: conventional free air thermal current
- **P** Ie: rated operational voltage

fr
- **A** Taille de l'appareil et courant assigné x100 A
- **B** Ui : tension assignée d'isolement
- **C** Ue : tension assignée d'emploi
- **D** Fréquence d'utilisation
- **E** Désignation : disjoncteur ou interrupteur sectionneur, adapté pour l'isolation
- **F** Ics : Pouvoir assigné de coupure de service en court-circuit
- **G** Icw : courant assigné de courte durée admissible
- **H** Norme d'utilisation et d'exploitation
- **I** Type de disjoncteur
- **J** Uimp : tension assignée de tenue aux chocs
- **K** Icu : pouvoir assigné de coupure ultime en court-circuit
- **L** Catégorie de sélectivité
- **M** Emplacement étiquette adresse IP
- **N** Icm : pouvoir assigné de fermeture en court-circuit
- **O** Ith : courant thermique conventionnel à l'air libre
- **P** Ie : courant assigné d'emploi

es
- **A** Tamaño del aparato e intensidad asignada x100 A
- **B** Ui: tensión asignada de seccionamiento
- **C** Ue: tensión asignada de empleo
- **D** Frecuencia
- **E** Designación: interruptor automático o interruptor en carga, apto para el seccionamiento
- **F** Ics: poder de corteen servicio
- **G** Icw: intensidad de corta duración admisible
- **H** Normativas
- **I** Poder de corte
- **J** Uimp: tensión nominal soportada a impulso
- **K** Icu: poder de corte en servicio último
- **L** Categoría de selectividad
- **M** Espacio para etiqueta de dirección IP
- **N** Icm: poder nominal de cierre en cortocircuito
- **O** Ith: corriente térmica al aire libre convencional
- **P** Ie: tensión asignada de empleo

de
- **A** Gerätegröße und Nennstrom x100 A
- **B** Ui: Nennisolationsspannung
- **C** Ue: Nennbetriebsspannung
- **D** Frequenz
- **E** Gerätetyp: Leistungsschalter oder Lasttrennschalter, geeignet für Isolation
- **F** Ics: Bemessungsbetriebskurzschluss-sausschaltvermögen
- **G** Icw: Bemessungskurzzeitstrom
- **H** Standard
- **I** Leistungsniveau
- **J** Uimp: Bemessungsstoßspannung
- **K** Icu: Bemessungsgrenzkurzschluss-sausschaltvermögen
- **L** Selektivitätskategorie
- **M** Position für Aufkleber mit IP-Adresse
- **N** Icm: Bemessungskurzschlusseins-chaltvermögen
- **O** Ith: konventioneller thermischer Strom in freier Luft
- **P** Ie: Nennbetriebsspannung

it
- **A** Dimensione dispositivo e corrente nominale x100 A
- **B** Ui: tensione di isolamento nominale
- **C** Ue: tensione di impiego nominale
- **D** Frequenza
- **E** Tipo di dispositivo: interruttore o interruttore di manovra-sezionatore, adatto per isolamento
- **F** Ics: potere di interruzione corto circuito nominale di servizio
- **G** Icw: corrente nominale di breve durata ammissibile
- **H** Standard
- **I** Livello di prestazione
- **J** Uimp: tensione nominale di tenuta ad impulso
- **K** Icu: potere di interruzione corto circuito estremo nominale
- **L** Categoria di selettività
- **M** Spazio per adesivo indirizzo IP
- **N** Icm: potere di chiusura nominale in corto circuito
- **O** Ith: corrente nominale termica in aria libera
- **P** Ie: tensione di impiego nominale

pt
- **A** Tamanho do dispositivo e corrente nominal x100 A
- **B** Ui: tensão nominal de isolamento
- **C** Ue: tensão de operação nominal
- **D** Frequência
- **E** Tipo de dispositivo: disjuntor ou interruptor-seccionador, adequado para isolamento
- **F** Ics: capacidade nominal de interrupção do curto-circuito em serviço
- **G** Icw: corrente de curta duração admissível nominal
- **H** Padrões
- **I** Nível de desempenho
- **J** Uimp: tensão admissível de impulso nominal
- **K** Icu: capacidade nominal de interrupção máxima em curto-circuito
- **L** Categoria de seletividade
- **M** Local do autocolante do endereço IP
- **N** Icm: capacidade nominal de curto-circuito
- **O** Ith: corrente térmica de atmosfera livre convencional
- **P** Ie: tensão de operação nominal

ru
- **A** Размер и номинальный ток устройства x100 A
- **B** Ui: номинальное напряжение изоляции
- **C** Ue: номинальное рабочее напряжение
- **D** Частота
- **E** Тип аппарата: автоматический выключатель или выключатель-разъединитель, пригодный для изоляции
- **F** Ics: наибольшая номинальная рабочая отключающая способность
- **G** Icw: допустимый сквозной ток короткого замыкания
- **H** Соответствие стандарту
- **I** Модификация аппарата
- **J** Uimp: номинальное импульсное выдерживаемое напряжение
- **K** Icu: предельная наибольшая отключающая способность
- **L** Категория избирательности
- **M** Место для наклейки с указанием IP-адреса
- **N** Icm: номинальная наибольшая включающая способность
- **O** Ith: условный тепловой ток в открытом исполнении
- **P** Ie: номинальное рабочее напряжение

zh
- **A** 设备尺寸和额定电流 x100 A
- **B** Ui: 额定绝缘电压
- **C** Ue: 额定工作电压
- **D** 频率
- **E** 设备类型：断路器或 负荷开关，适合 隔离
- **F** Ics: 额定运行短路 分断能力
- **G** Icw: 额定瞬时耐受 电流
- **H** 标准
- **I** 分断类型
- **J** Uimp: 额定冲击耐受 电压
- **K** Ics: 额定极限短路 分断能力
- **L** 选配目录
- **M** IP 地址标签位置
- **N** Icm: 额定短路接通 能力
- **O** Ith: 常规自由空气热电流
- **P** Ie: 额定工作电压

3.6 Manufacturing Date / Date de fabrication / Fecha de fabricación / Herstellungsdatum / Data di produzione / Data de fabrico / Дата производства / 制造日期

en The product's manufacture date is coded PPYYWWDXXXX, where:
- PP: plant code
- YY: year of manufacture
- WW: week of manufacture
- D: weekday of manufacture (Monday = 1)
- XXXX: Manufacturing rank order of the product in the day, from 0001 to 9999

Eg: PP171830001 = first product manufactured at plant PP on Wednesday 3 May 2017.

fr La date de fabrication du produit est codée PPYYWWDXXXX, avec:
- PP : code usine
- YY : année de fabrication
- WW : semaine de fabrication
- D : jour de fabrication dans la semaine (lundi = 1)
- XXXX : numéro d'ordre de fabrication du produit dans le jour, de 0001 à 9999

Ex : PP171830001 = premier produit fabriqué le mercredi 3 mai 2017 par l'usine PP.

es La fecha de fabricación del producto está codificada PPYYWWDXXXX, donde:
- PP: código de la planta
- YY: año de fabricación
- WW: semana de fabricación
- D: día de la semana de fabricación (lunes = 1)
- XXXX: Orden de fabricación del producto en el día, de 0001 a 9999

Ej.: PP171830001 = primer producto fabricado en la planta PP el miércoles 3 de mayo de 2017.

de Das Herstellungsdatum des Produkts ist folgendermaßen codiert: PPYYWWDXXXX. Wobei:
- PP: Werkscode
- YY: Herstellungsjahr
- WW: Herstellungswoche
- D: Herstellungstag (Montag = 1)
- XXXX: Herstellungsrangfolge des Produkts am Tag, von 0001 bis 9999

Z. B.: PP171830001 = erstes Produkt, das in Werk PP, am Mittwoch den 3. Mai, im Jahr 2017 gefertigt wurde.

it La data di fabbricazione del prodotto è indicata con il codice PPYYWWDXXXX, dove:
- PP: codice stabilimento
- YY: anno di fabbricazione
- WW: settimana di fabbricazione
- D: giorno della settimana in cui il prodotto è stato fabbricato (lunedì = 1)
- XXXX: Ordine di classificazione produzione del prodotto nel giorno, da 0001 a 9999

Ad es. PP171830001 = primo prodotto fabbricato presso lo stabilimento PP mercoledì 3 maggio 2017.

pt A data de fabrico do produto está sob a forma de código PPYYWWDXXXX, onde:
- PP: código da fábrica
- YY: ano de fabrico
- WW: semana de fabrico
- D: dia da semana de fabrico (Segunda-feira = 1)
- XXXX: Ordem de classificação de fabrico do produto no dia, de 0001 a 9999

Ex: PP171830001 = produto fabricado na fábrica PP na quarta-feira, 3 de maio de 2017.

ru Дата производства продукта закодирована в формате PPYYWWDXXXX, где:
- PP: код завода
- YY: год производства
- WW: неделя производства
- D: день недели, когда был произведен продукт (понедельник = 1)
- XXXX: Порядковый производственный номер изделия от 0001 до 9999 (обнуляется ежедневно)

Пример. PP171830001 = первый продукт, который произведен на заводе PP в среду, 3 мая 2017 года.

zh 产品制造日期采用如下代码 PPYYWWDXXXX, 其中：
- PP: 工厂代码
- YY: 制造年份
- WW: 第几周制造
- D: 星期几制造（星期一 = 1）
- XXXX: 当天产品的制造次序，从 0001 到 9999

例如：PP171830001 = 第一个产品于 2017 年 5 月 3 日星期三 在 PP 工厂制造。

3.7 Radio Frequency Compliance Statement / Déclarations de conformité concernant l'exposition aux radiofréquences / Declaración de conformidad de radiofrecuencia / Konformitätserklärung für Funkanlagen / Dichiarazione sulla conformità alla radiofrequenza / Declaração de conformidade com frequência de rádio / Заявление о соответствии требованиям по радиочастотам / 射频合规声明

en The radio frequency compliance statements for Masterpact MTZ circuit breakers with Micrologic X control unit, according to the requirements of the countries or geographical areas, are gathered together in the document QGH50009 shipped with the circuit breaker.

NOTA:
The document QGH50009 is not shipped with the Masterpact MTZ devices without Micrologic X control unit.

fr Les déclarations de conformité concernant l'exposition aux radiofréquences des appareils Masterpact MTZ avec une unité de contrôle Micrologic X, selon les exigences des différents pays et zones géographiques, sont regroupées dans le document QGH50009 livré avec le disjoncteur.

NOTE:
Le document QGH50009 n'est pas livré avec les appareils Masterpact MTZ sans unité de contrôle Micrologic X.

es Las declaraciones de conformidad de radiofrecuencia para interruptores automáticos Masterpact MTZ con unidad de control Micrologic X, según los requisitos de los países o las zonas geográficas, se recopilan en el documento QGH50009 suministrado con el interruptor automático.

NOTE:
El documento QGH50009 no se suministra con los dispositivos Masterpact MTZ sin la unidad de control Micrologic X.

de Die Konformitätserklärungen für Funkanlagen für die Leistungsschalter der Baureihe Masterpact MTZ mit einer Steuereinheit des Typs Micrologic X gemäß den Anforderungen der jeweiligen Länder bzw. geografischen Regionen wurden im Dokument QGH50009 gruppiert, das im Lieferumfang der Leistungsschalter enthalten ist.

HINWEIS:
Im Lieferumfang von Masterpact MTZ-Geräten ohne Micrologic X-Steuereinheit ist das Dokument QGH50009 nicht enthalten.

it Le dichiarazioni sulla conformità alla radiofrequenza per gli interruttori Masterpact MTZ con unità di controllo Micrologic X, in base ai requisiti dei paesi o delle aree geografiche, sono riunite nel documento QGH50009 fornito con l'interruttore.

NOTA:
Il documento QGH50009 non è fornito con i dispositivi Masterpact MTZ senza unità di controllo Micrologic X.

pt As declarações de conformidade com frequência de rádio para disjuntores Masterpact MTZ com unidade de controle Micrologic X, de acordo com os requisitos dos países ou áreas geográficas, estão reunidas no documento QGH50009 enviado com o disjuntor.

NOTA:
O documento QGH50009 não é enviado com os dispositivos Masterpact MTZ sem a unidade de controle Micrologic X.

ru Заявления о соответствии требованиям по радиочастотам для автоматических выключателей Masterpact MTZ с блоком управления Micrologic X, согласно требованиям стран или географических регионов, собраны в документе QGH50009, поставляемом вместе с автоматическим выключателем.

ПРИМЕЧАНИЕ:
Документ QGH50009 не поставляется с устройствами Masterpact MTZ без блока управления Micrologic X.

zh 带 Micrologic X 控制单元的 Masterpact MTZ 断路器的射频合规声明以相应国家和地区的要求为基准，共同收录到断路器随附的文档 QGH50009 中。

注:
不带 Micrologic X 控制单元的 Masterpact MTZ 断路器没有随附文档 QGH50009。

4 Operation / Exploitation / Funcionamiento / Betrieb / Funzionamento / Funcionamento / Эксплуатация / 操作

4.1 Device Status / Etat de l'appareil / Estado del aparato / Gerätestatus / Stato dispositivo / Estado do dispositivo / Состояние аппарата / 设备状态



en Device is off (main contacts are open), closing spring is discharged

fr Appareil ouvert (contacts de puissance ouverts), ressort d'accumulation d'énergie déchargé

es El dispositivo está apagado (los contactos principales están abiertos), muelle resorte de cierre descargado

de Das Gerät ist aus (Hauptkontakte sind offen), Einschaltfeder ist nicht gespannt

it Il dispositivo è spento (i contatti principali sono aperti), la molla di chiusura è scarica

pt Dispositivo desligado (contatos principais abertos), a mola de fechamento está descarregada

ru Аппарат выключен (главные контакты разомкнуты), замыкающая пружина не взведена

zh 设备关闭 （主触点分断），合闸弹簧已释能



en Device is off (main contacts are open), closing spring is charged. The device is not ready-to-close because at least one of the following conditions is true:
- the device has tripped and must be reset
- the MX opening voltage release is energized
- the MN undervoltage release is not energized
- the device is mechanically locked in the open position by using padlock or keylock or by using interlocking cables.

fr Appareil ouvert (contacts de puissance ouverts), ressort d'accumulation d'énergie armé.
L'appareil n'est pas prêt à fermer en raison d'au moins une des conditions suivantes:
- l'appareil a effectué un déclenchement et doit être réarmé
- le déclencheur voltmétrique d'ouverture MX est sous tension
- le déclencheur voltmétrique à manque de tension MN est hors tension
- l'appareil est verrouillé mécaniquement en position ouverte à l'aide d'un cadenas ou d'une serrure ou par interverrouillage.

es El dispositivo está apagado (los contactos principales están abiertos), el muelle resorte de cierre está cargado.
El aparato no está preparado para cerrarse porque se cumplen al menos una de las condiciones siguientes:
- el aparato se ha disparado y debe rearmarse
- la bobina de apertura MX está activada
- la bobina de disparo MN no está activada
- el dispositivo está bloqueado mecánicamente en la posición abierta con un candado o una cerradura o mediante cables de interenclavamiento.

de Das Gerät ist aus (Hauptkontakte sind offen), Einschaltfeder ist gespannt.
Das Gerät ist nicht einschaltbereit, da mindestens eine der folgenden Bedingungen erfüllt ist:
- das Gerät wurde ausgelöst und muss zurückgesetzt werden
- der Arbeitsstromauslöser MX ist spannungsführend
- der Unterspannungsauslöser MN ist nicht spannungsführend
- das Gerät ist mithilfe von Vorhängeschloss bzw. Tastensperre oder unter Verwendung von Verriegelungskabeln automatisch in der offenen Position verriegelt.

it Il dispositivo è spento (i contatti principali sono aperti), la molla di chiusura è carica.
Il dispositivo non è pronto alla chiusura in quanto è vera almeno una delle condizioni seguenti:
- il dispositivo si è sganciato e deve essere ripristinato
- lo sganciatore voltmetrico di apertura MX è alimentato
- lo sganciatore di minima tensione MN non è alimentato
- Il dispositivo è bloccato meccanicamente nella posizione aperta tramite lucchetto o blocco a chiave o cavi di interblocco.

pt Dispositivo desligado (contatos principais abertos), mola de fechamento carregada.
O dispositivo não está pronto para fechar porque pelo menos uma das seguintes condições é verdadeira:
- o dispositivo disparou e deve ser reiniciado
- a bobina de abertura MX está energizada
- a bobina de mínima tensão MN não está energizada
- o dispositivo é bloqueado mecanicamente na posição aberta quando se utiliza cadeado ou fechadura ou quando se utilizam cabos de interbloqueio.

ru Аппарат выключен (главные контакты разомкнуты), замыкающая пружина взведена.
Устройство не готово к замыканию, поскольку как минимум одно из указанных ниже условий истинно:
- аппарат сработал и должен быть возвращен в исходное состояние
- на независимый расцепитель MX подается питание
- на расцепитель минимального напряжения MN не подается питание
- аппарат механически зафиксирован в разомкнутом положении с помощью замка и (или) навесного замка или блокирующих кабелей.

zh 设备关闭（主触点分断），合闸弹簧储能。
由于以下条件中至少有一项成立，该设备未处于合闸准备就绪状态：
- 设备已脱扣，必须复位
- MX 分励线圈已通电
- MN 欠压线圈未通电
- 通过使用挂锁/钥匙锁或联锁电缆将该设备机械锁定在分断位置。



en Device is off (main contacts are open), closing spring is charged. The device is ready-to-close.

fr Appareil ouvert (contacts de puissance ouverts), ressort d'accumulation d'énergie armé. L'appareil est prêt à fermer.

es El dispositivo está apagado (los contactos principales están abiertos), el muelle resorte de cierre está cargado.
El dispositivo está preparado para el cierre.

de Das Gerät ist aus (Hauptkontakte sind offen), Einschaltfeder ist gespannt. Das Gerät ist einschaltbereit.

it Il dispositivo è spento (i contatti principali sono aperti), la molla di chiusura è carica. Il dispositivo è pronto alla chiusura.

pt Dispositivo desligado (contatos principais abertos), mola de fechamento carregada. O dispositivo está pronto para encerrar.

ru Аппарат выключен (главные контакты разомкнуты), замыкающая пружина взведена. Аппарат готов к замыканию.

zh 设备关闭（主触点分断），合闸弹簧储能。设备已准备好合闸。

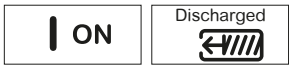

en Device is on (main contacts are closed), closing spring is discharged.

fr Appareil fermé (contacts de puissance fermés), ressort d'accumulation d'énergie désarmé.

es El dispositivo está encendido (los contactos principales están cerrados) y el muelle resorte de cierre está descargado.

de Das Gerät ist an (Hauptkontakte sind geschlossen), Einschaltfeder ist nicht gespannt.

it Il dispositivo è acceso (i contatti principali sono chiusi), la molla di chiusura è scarica.

pt Dispositivo ligado (contatos principais fechados), mola de fechamento descarregada.

ru Аппарат включен (главные контакты замкнуты), замыкающая пружина не взведена.

zh 设备开启（主触点闭合），合闸弹簧释能。



en Device is on (main contacts are closed), closing spring is charged. The device is not ready-to-close because it is already closed.

fr Appareil fermé (contacts de puissance fermés), ressort d'accumulation d'énergie chargé, fermeture impossible car l'appareil est déjà fermé.

es El dispositivo está encendido (los contactos principales están cerrados) y el muelle resorte de cierre está cargado.
El dispositivo no está preparado para cerrar porque ya está cerrado.

de Das Gerät ist an (Hauptkontakte sind geschlossen), Einschaltfeder ist gespannt. Das Gerät ist nicht einschaltbereit, da es bereits geschlossen ist.

it Il dispositivo è acceso (i contatti principali sono chiusi) e la molla di chiusura è carica. Il dispositivo non è pronto alla chiusura perché è già chiuso.

pt Dispositivo ligado (contatos principais fechados), mola de fechamento carregada. O dispositivo não está pronto para encerrar porque já está encerrado.

ru Аппарат включен (главные контакты замкнуты), замыкающая пружина взведена. Аппарат не готов к замыканию, поскольку он уже замкнут.

zh 设备开启（主触点闭合），合闸弹簧储能。设备尚未准备好合闸，因为它已经合闸。

4.2 Device Operation / Fonctionnement de l'appareil / Funcionamiento del aparato / Gerätebetrieb / Funzionamento dispositivo / Funcionamento do dispositivo / Работа аппарата / 设备操作

4.2.1 Manual Spring Charging / Chargement manuel du ressort d'accumulation d'énergie / Carga manual de muelle resorte / Manuelles Spannen der Feder / Carica molla manuale / Mola manual Carregar / Ручной взвод пружины / 手动弹簧储能

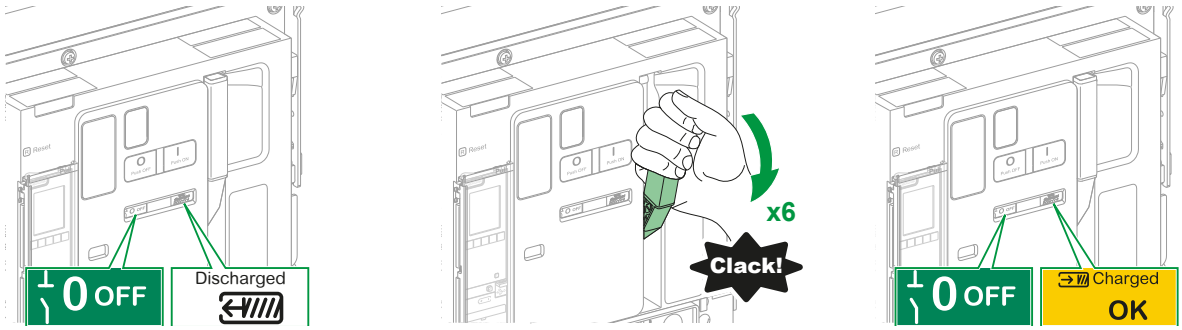

4.2.2 Close Device / Fermeture de l'appareil / Cierre de aparato / Gerät schließen / Chiusura dispositivo / Fechar dispositivo / Замыкание аппарата / 合闸设备

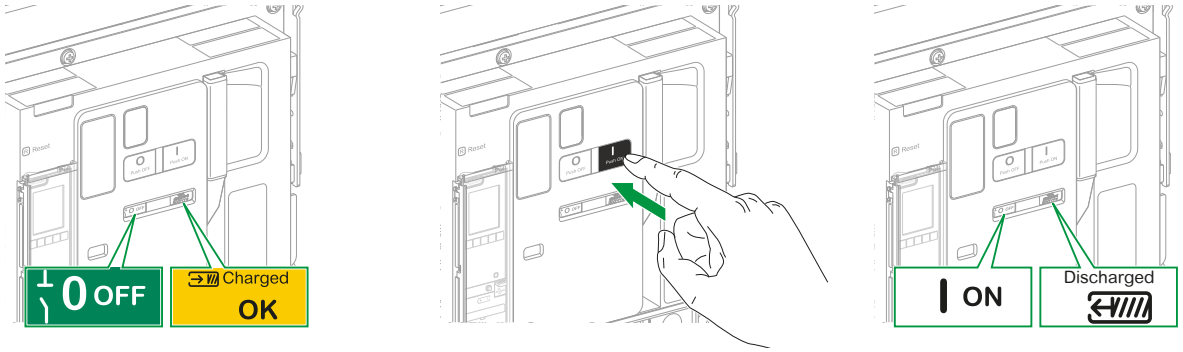

4.2.3 Open Device / Ouverture de l'appareil / Apertura de aparato / Gerät öffnen / Apertura dispositivo / Abrir dispositivo / Размыкание аппарата / 分闸设备

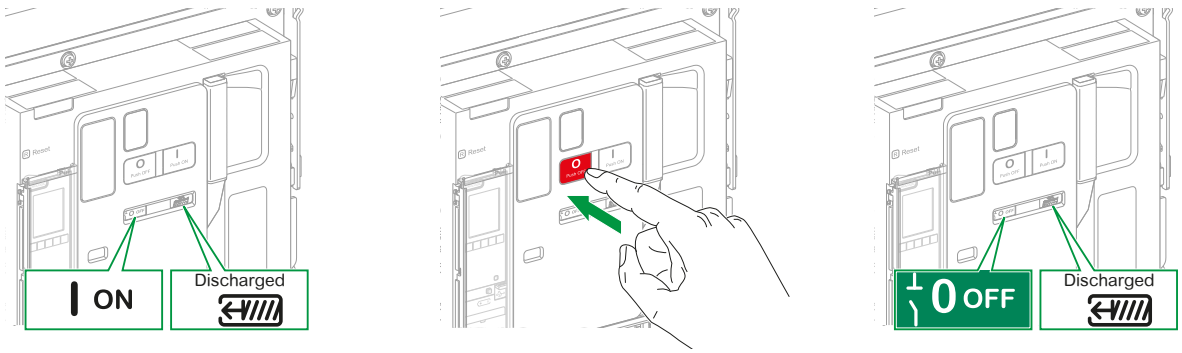

⚠ CAUTION / ATTENTION / ATENCIÓN / VORSICHT / ATTENZIONE / CUIDADO / ВНИМАНИЕ / 小心

HAZARD OF CLOSING ON ELECTRICAL FAULT Do not close the device without first inspecting and, if necessary, repairing the downstream electrical equipment. **Failure to follow these instructions can result in injury or equipment damage.**	**RISQUE DE REFERMETURE SUR DEFAUT ELECTRIQUE** Ne refermez pas l'appareil sans avoir vérifié et éventuellement réparé l'installation électrique aval. **Si ces directives ne sont pas respectées, cela peut entraîner des blessures ou des dommages matériels.**	**RIESGO DE CIERRE TRAS FALLO ELÉCTRICO** No cierre el aparato sin comprobarlo antes y repare el equipo eléctrico aguas abajo si es necesario. **El incumplimiento de estas instrucciones puede causar lesiones o daño al equipo.**	**GEFAHR DES SCHLIESSENS BEI ELEKTRISCHEM FEHLER** Schließen Sie das Gerät nicht, ohne es vorher untersucht zu haben und reparieren Sie, wenn nötig, die nachgeschalteten elektrischen Geräte. **Die Nichtbeachtung dieser Anweisungen kann Verletzungen oder Sachschäden zur Folge haben.**
RISCHIO DI CHIUSURA CON GUASTO ELETTRICO Non chiudere il dispositivo senza prima ispezionare e, se necessario, riparare l'apparecchiatura elettrica a valle. **Il mancato rispetto di queste istruzioni può provocare infortuni o danni alle apparecchiature.**	**RISCO DE FECHAMENTO APÓS AVARIA ELÉTRICA** Não feche o dispositivo sem inspecionar e, se necessário, reparar o equipamento elétrico a jusante **A não observância destas instruções pode provocar ferimentos pessoais, ou danos no equipamento.**	**ОПАСНОСТЬ ЗАМЫКАНИЯ ПРИ ПОВРЕЖДЕНИИ В ЭЛЕКТРИЧЕСКОЙ ЦЕПИ** Не замыкайте аппарат, не проведя предварительный осмотр электрооборудования ниже по цепи и его ремонт при необходимости. **Несоблюдение этих инструкций может привести к травме или повреждению оборудования.**	电气故障时的合闸 风险 设备合闸之前，务必 进行检查，必要时应修复 下游电气设备。 不遵循上述说明可能导致人身伤害或设备损坏。

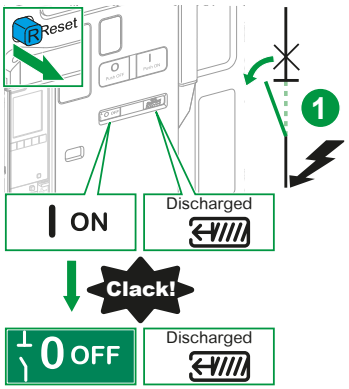

- en Device has tripped.
- fr Appareil déclenché.
- es El aparato se ha disparado.
- de Gerät wurde ausgelöst.
- it Dispositivo sganciato.
- pt O dispositivo foi disparado.
- ru Срабатывание аппарата.
- zh 设备已脱扣。

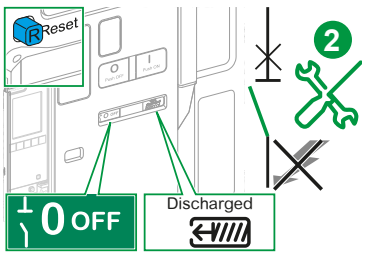

- en Inspect and repair downstream equipment, using proper safety precautions.
- fr Inspectez et réparez l'équipement en aval en suivant les instructions de sécurité.
- es Compruebe y repare la instalación aguas abajo teniendo en cuenta las precauciones de seguridad apropiadas.
- de Untersuchen und reparieren Sie die nachgeschalteten Geräte; unter angemessenen Sicherheitsvorkehrungen.
- it Ispezionare e riparare l'apparecchiatura a valle, prendendo le adeguate precauzioni di sicurezza.
- pt Inspecione e repare o equipamento a jusante, utilizando as precauções de segurança adequadas.
- ru Осмотрите и отремонтируйте оборудование ниже по цепи, применяя необходимые меры техники безопасности.
- zh 检查并修复下游设备，采取适当的安全措施。

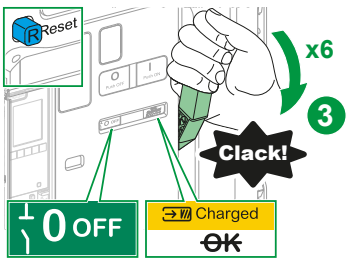

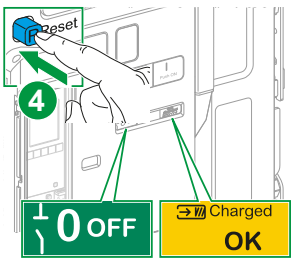

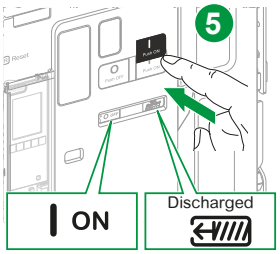

- en Reset and reclose the device.
- fr Réarmez et refermez l'appareil.
- es Rearme y vuelva a cerrar el aparato.
- de Setzen Sie das Gerät zurück und schließen Sie es wieder.
- it Riarmare e richiudere il dispositivo.
- pt Reinicie e volte a fechar o dispositivo.
- ru Сбросьте аппарат и замкните его.
- zh 复位设备并重新合闸。

- en For instructions on operating the device using remote control accessories, refer to the Masterpact MTZ2/ MTZ3 user guide.
- fr Pour des instructions sur le fonctionnement de l'appareil à l'aide des accessoires de contrôle à distance, consultez le guide utilisateur du Masterpact MTZ2/MTZ3.
- es Para obtener instrucciones sobre el funcionamiento del dispositivo con accesorios de control remoto, consulte el manual del usuario de Masterpact MTZ2/MTZ3.
- de Für Anweisungen für den Betrieb des Geräts mit dezentralem Steuerungszubehör, siehe das Benutzerhandbuch von Masterpact MTZ2/MTZ3.
- it Per istruzioni sull'utilizzo del dispositivo mediante gli accessori di controllo remoto, consultare la guida utente Masterpact MTZ2/MTZ3.
- pt Para obter instruções sobre como utilizar o dispositivo utilizando acessórios de controlo remoto, consulte o guia do utilizador Masterpact MTZ2/ MTZ3.
- ru Инструкции по эксплуатации аппарата с помощью вспомогательных устройств для дистанционного управления приводятся в руководстве пользователя Masterpact MTZ2/MTZ3.
- zh 有关使用远程控制配件操作设备的说明，请参阅 Masterpact MTZ2/MTZ3 用户指南。

4.3 Drawout Device Position / Position de l'appareil débrochable / Posición del aparato seccionable / Position des Einschubgeräts / Posizione dispositivo estraibile / Posição do dispositivo extraível / Положение выкатного аппарата / 抽出式设备位置

Position indicator Témoin de position Testigo de posición Positionsanzeige Indicatore di posizione Indicador de posição Указатель положения 位置指示	Device position Position de l'appareil Posición del aparato Geräteposition Posizione dispositivo Posição do dispositivo Положение аппарата 设备位置	Power (A) Puissance (A) Alimentación (A) Leistung (A) Alimentazione (A) Potência (A) Питание (A) 电源 (A)	Control (B) Contrôle (B) Control (B) Steuerung (B) Controllo (B) Controlo (B) Управление (B) 控制 (B)	Device Status État de l'appareil Estado del aparato Gerätestatus Stato dispositivo Estado do dispositivo Состояние аппарата 设备状态
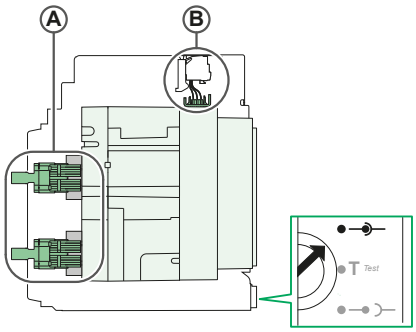	Connected Embroché Conectado Verbunden Collegato Ligado Подключено 已连接	Engaged Engagé Activado Aktiviert Inserito Ativado Включено 已接合	Engaged Engagé Activado Aktiviert Inserito Ativado Включено 已接合	Can be operated. Ready for service. Opérationnel. Prêt à fonctionner. Puede utilizarse. Preparado para el servicio. Kann in Betrieb genommen werden. Betriebsbereit. Utilizzabile. Pronto per servizio. Pode ser utilizado. Pronto para entrar em funcionamento. Можно эксплуатировать. Аппарат готов к работе. 可以操作。准备运行。
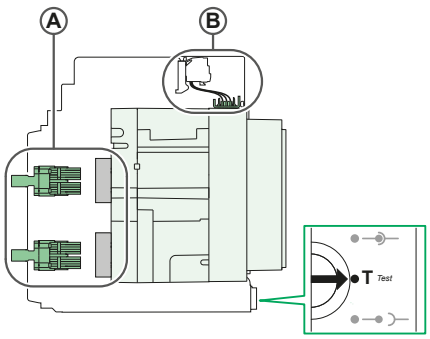	Test Test Prueba Test Test Teste Проверка 测试	Disengaged Désengagé Desactivado Deaktiviert Disinserito Desativado Выключено 已分离	Engaged Engagé Activado Aktiviert Inserito Ativado Включено 已接合	Can be operated. Can have operation and control systems tested. Opérationnel. Test possible des systèmes de fonctionnement et de contrôle. Puede utilizarse. Pueden probarse los sistemas de control y funcionamiento. Kann in Betrieb genommen werden. Betriebs- und Steuerungssysteme können getestet werden. Utilizzabile. Test possibile per sistemi di controllo e funzionamento. Pode ser utilizado. Os sistemas de funcionamento e controlo podem ser testados. Можно эксплуатировать. Можно выполнять проверку систем эксплуатации и управления. 可以操作。可以测试操作和控制系统。
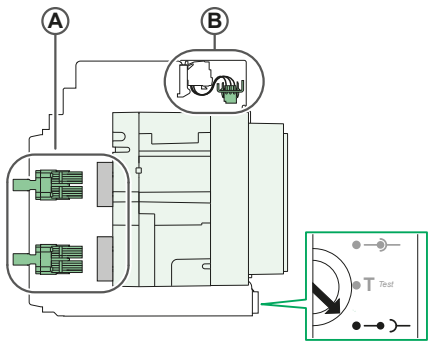	Disconnected Débroché Desconectado Nicht verbunden Scollegato Desligado Отключено 已退出	Disengaged Désengagé Desactivado Deaktiviert Disinserito Desativado Выключено 已分离	Disengaged Désengagé Desactivado Deaktiviert Disinserito Desativado Выключено 已分离	Can be operated. Can be removed from chassis. Opérationnel. Retrait possible du châssis. Puede utilizarse. Puede extraerse del chasis. Kann in Betrieb genommen werden. Kann von der Einschubkassette entfernt werden. Utilizzabile. Può essere rimosso dal telaio. Pode ser utilizado. Pode ser removido do chassis. Можно эксплуатировать. Можно снимать с шасси. 可以操作。可从抽架中拆下。
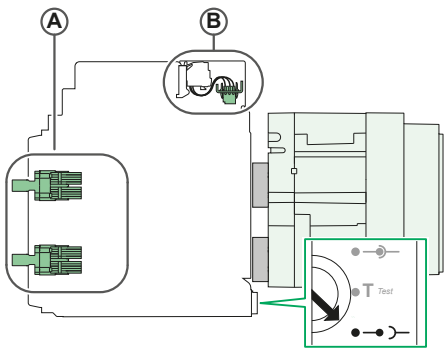	Removed Retiré Extraído Entfernt Rimosso Removido Снято 已拆下	Disengaged Désengagé Desactivado Deaktiviert Disinserito Desativado Выключено 已分离	Disengaged Désengagé Desactivado Deaktiviert Disinserito Desativado Выключено 已分离	Removed from chassis. Retiré du châssis. Extraído del chasis. Von Einschubkassette entfernt. Rimosso dal telaio. Removido do chassis. Аппарат снят с шасси. 已从抽架中拆下。

4.4 Chassis Operation / Fonctionnement du châssis / Funcionamiento del chasis / Betrieb der Einschubkassette / Operazioni telaio / Funcionamento do chassis / Эксплуатация шасси / 抽架操作

4.4.1 Drawout Device Disconnection / Débrochage de l'appareil débrochable / Desconexión del aparato seccionable / Abtrennen des Einschubgeräts / Disconnessione dispositivo estraibile / Desativação do dispositivo extraível / Отсоединение выкатного аппарата / 抽出式设备断开连接

NOTICE / AVIS / AVISO / HINWEIS / AVVISO / AVISO / УВЕДОМЛЕНИЕ / 注意			
HAZARD OF EQUIPMENT DAMAGE ● Use the provided racking handle to rack the device into or out of chassis. ● Do not use power tools for racking. ● Do not turn the handle after position release button has popped out. **Failure to follow these instructions can result in equipment damage.**	**RISQUE DE DOMMAGES MATÉRIELS** ● Utilisez la manivelle fournie pour embrocher ou débrocher l'appareil dans le châssis. ● N'utilisez pas d'outils électriques pour l'embrochage. ● Ne tournez pas la poignée lorsque le bouton-poussoir d'acquittement est sorti. **Si ces directives ne sont pas respectées, cela peut entraîner des dommages matériels.**	**PELIGRO DE DAÑO AL EQUIPO** ● Use la manivela proporcionada para montar o desmontar el dispositivo en el chasis. ● No use herramientas eléctricas para el montaje. ● No gire la manivela una vez que el botón pulsador de posición de desbloqueo haya saltado hacia fuera. **El incumplimiento de estas instrucciones puede causar daño al equipo.**	**GEFAHR EINER BESCHÄDIGUNG DES GERÄTS** ● Verwenden Sie die beigefügte Handkurbel, um das Gerät in die oder aus der Einschubkassette zu bewegen. ● Verwenden Sie keine Elektrowerkzeuge, um das Gerät zu bewegen. ● Drehen Sie die Kurbel nicht weiter, wenn die Positionsentsperrungstaste sich löst und nicht mehr hineingedrückt ist. **Die Nichtbeachtung dieser Anweisungen kann Sachschäden zur Folge haben.**
PERICOLO DI DANNEGGIAMENTO DELL'APPARECCHIATURA ● Usare la leva di inserzione/estrazione fornita per inserire il dispositivo nel telaio o estrarlo. ● Non utilizzare utensili alimentati per inserzione/estrazione. ● Non ruotare la leva dopo l'uscita del pulsante di rilascio posizione. **Il mancato rispetto di queste istruzioni può provocare danni alle apparecchiature.**	**RISCO DE DANOS NO EQUIPAMENTO** ● Utilize a manivela para inserir ou retirar o dispositivo do chassis. ● Não utilize ferramentas elétricas para inserir ou retirar o dispositivo. ● Não rode a alavanca depois do botão de posição se soltar. **A não observância destas instruções pode provocar danos no equipamento.**	**ОПАСНОСТЬ ПОВРЕЖДЕНИЯ ОБОРУДОВАНИЯ** ● Используйте предоставляемую рукоятку для вкатывания, чтобы извлечь аппарат из шасси или установить его в шасси. ● Не используйте для извлечения или установки механизмы с электроприводом. ● Не поворачивайте рукоятку после выпадения кнопки квитирования положения. **Несоблюдение этих инструкций может привести к повреждению оборудования.**	可能有设备损坏的风险 ● 使用摇进摇出手柄将设备 摇进摇出抽架。 ● 请勿使用电动工具来摇进摇出。 ● 位置释放按钮弹出后，请勿转动手柄。 不遵循上述说明可能导致设备损坏。

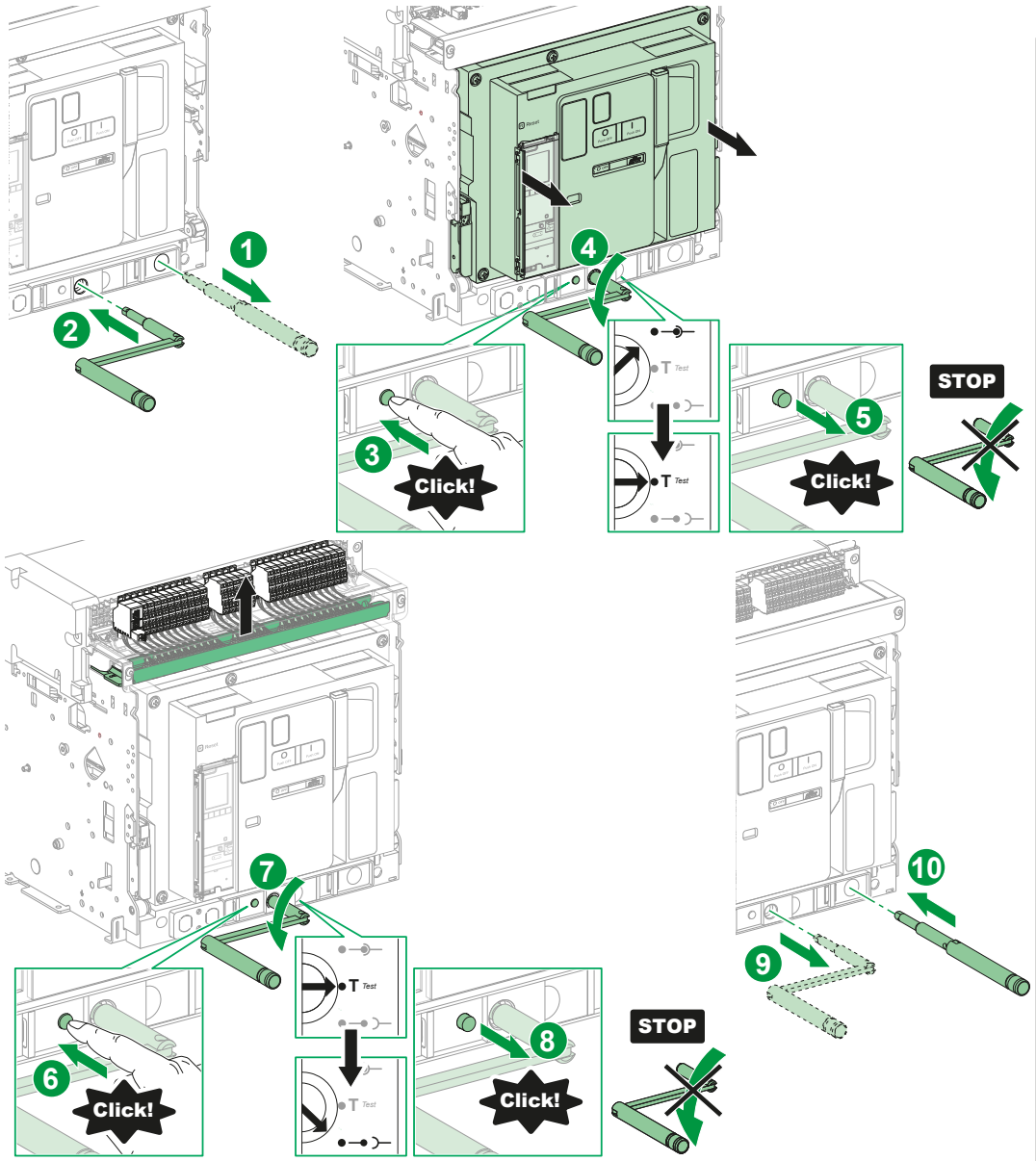

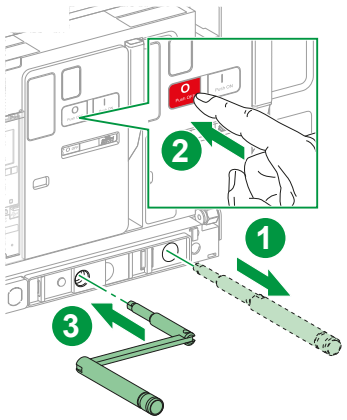

en If the IBPO racking interlock option is installed, press the opening pushbutton to allow insertion of the racking handle.

fr Si l'option de verrouillage d'embrochage IBPO est installée, appuyez sur le bouton-poussoir d'ouverture pour insérer la manivelle.

es Si se instala la opción del interenclavamiento del botón de apertura-acceso a la manivela IBPO, pulse el botón pulsador de apertura para permitir la inserción de la manivela.

de Wenn die IBPO Verriegelung der Kurbeleinführung installiert ist, drücken Sie die AUS-Taste, um das Einsetzen der Handkurbel zu ermöglichen.

it Se l'opzione di blocco leva IBPO è installata, premere il pulsante di apertura per consentire l'inserimento della leva di inserzione/estrazione.

pt Se o intertravamento de inserção IBPO estiver instalado, prima o botão de abertura para permitir a inserção da manivela.

ru Если в аппарате предусмотрена блокировка вкатывания IBPO, нажмите кнопку отключения, чтобы иметь возможность вставить рукоятку для вкатывания.

zh 若已安装 IBPO 进退联锁选项 ，可按分闸按钮 以插入摇进摇出手柄。

⚠ DANGER / DANGER / PELIGRO / GEFAHR / PERICOLO / PERIGO / ОПАСНОСТЬ / 危险

HAZARD OF DEVICE FALLING
- Be sure lifting equipment has lifting capacity for the device being lifted.
- Follow manufacturer's instructions for use of lifting equipment.
- Wear hard hat, safety shoes and heavy gloves.

Failure to follow these instructions will result in death or serious injury.

RISQUE DE CHUTE DE L'APPAREIL
- Assurez-vous que l'appareil de levage a la capacité de levage pour l'appareil à soulever.
- Suivez les consignes du fabricant lors de l'utilisation de l'appareil de levage.
- Portez un casque de protection, des chaussures de sécurité et des gants épais.

Si ces directives ne sont pas respectées, cela entraînera la mort ou des blessures graves.

RIESGO DE CAÍDA DEL APARATO
- Asegúrese de que el equipo de elevación tiene la capacidad suficiente para el dispositivo que desea elevar.
- Para utilizar el equipo de elevación, siga las instrucciones del fabricante.
- Lleve puestos casco, calzado de seguridad y guantes pesados.

El incumplimiento de estas instrucciones provocará lesiones graves o incluso la muerte.

GEFAHR DES FALLENS DES GERÄTS
- Stellen Sie sicher, dass das Hebezeug eine ausreichende Tragfähigkeit hat, um das Gerät zu heben.
- Folgen Sie den Anweisungen des Herstellers bei der Verwendung von Hebezeug.
- Tragen Sie einen Schutzhelm, Sicherheitsschuhe und dicke Handschuhe.

Die Nichtbeachtung dieser Anweisungen führt zu Tod oder schweren Verletzungen.

PERICOLO DI CADUTA DEL DISPOSITIVO
- Verificare che il dispositivo di sollevamento abbia una capacità di sollevamento adatta al dispositivo da sollevare.
- Seguire le istruzioni del produttore per l'uso dell'apparecchiatura di sollevamento.
- Indossare un casco rigido, scarpe di sicurezza e guanti spessi.

Il mancato rispetto di queste istruzioni provocherà morte o gravi infortuni.

PERIGO DE QUEDA DO DISPOSITIVO
- Certifique-se de que o mecanismo elevatório é adequado para o dispositivo que pretende elevar.
- Siga as instruções do fabricante sobre como utilizar equipamento de elevação.
- Use um capacete, calçado de segurança e luvas grossas.

A não observância destas instruções resultará em morte, ou ferimentos graves.

ОПАСНОСТЬ ПАДЕНИЯ УСТРОЙСТВА
- Убедитесь, что подъемное оборудование способно выдержать вес поднимаемого узла.
- Эксплуатацию подъемного оборудования осуществляйте согласно инструкциям изготовителя.
- Для выполнения работ надевайте каску, защитную обувь и прочные рукавицы.

Несоблюдение этих инструкций приведет к смерти или серьезной травме.

设备掉落风险
- 确保吊装设备有足够的吊装 能力来吊起设备。
- 关于吊装设备的使用，请遵循制造商说明 。
- 穿戴安全帽、安全鞋和厚手套。

不遵循上述说明将导致人员伤亡。

NOTICE / AVIS / AVISO / HINWEIS / AVVISO / AVISO / УВЕДОМЛЕНИЕ / 注意

HAZARD OF EQUIPMENT DAMAGE
Chassis must be secured when installing or removing device.

Failure to follow these instructions can result in equipment damage.

RISQUE DE DOMMAGES MATÉRIELS
Fixez le châssis avant d'installer ou d'enlever l'appareil.

Si ces directives ne sont pas respectées, cela peut entraîner des dommages matériels.

PELIGRO DE DAÑO AL EQUIPO
El chasis debe estar sujeto al instalar o extraer el aparato.

El incumplimiento de estas instrucciones puede causar daño al equipo.

GEFAHR EINER BESCHÄDIGUNG DES GERÄTS
Die Einschubkassette muss bei Installation oder Entfernen des Geräts gesichert sein.

Die Nichtbeachtung dieser Anweisungen kann Sachschäden zur Folge haben.

PERICOLO DI DANNEGGIAMENTO DELL'APPARECCHIATURA
Il telaio deve essere fissato quando si installa o si rimuove il dispositivo.

Il mancato rispetto di queste istruzioni può provocare danni alle apparecchiature.

RISCO DE DANOS NO EQUIPAMENTO
Quando instalar ou remover o dispositivo, é necessário fixar o chassis.

A não observância destas instruções pode provocar danos no equipamento.

ОПАСНОСТЬ ПОВРЕЖДЕНИЯ ОБОРУДОВАНИЯ
Во время установки или извлечения аппарата необходимо зафиксировать шасси.

Несоблюдение этих инструкций может привести к повреждению оборудования.

可能有设备损坏的风险
安装或拆卸 设备时，必须固定抽架。
不遵循上述说明可能导致设备损坏。

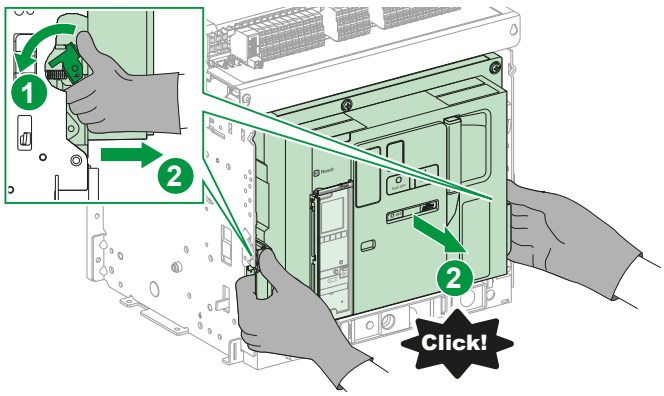

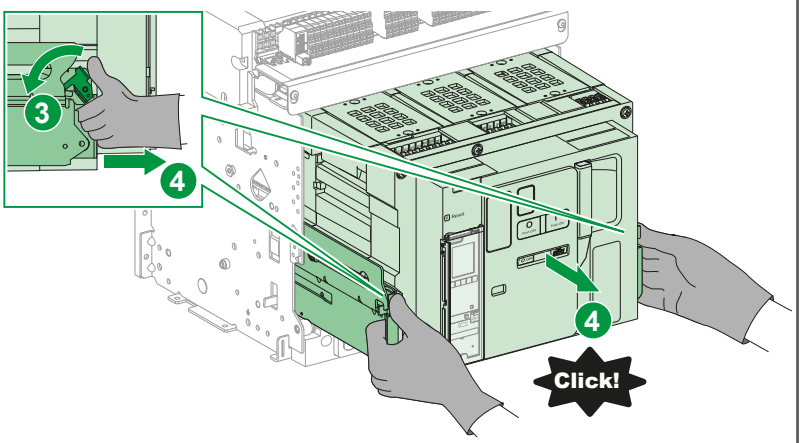

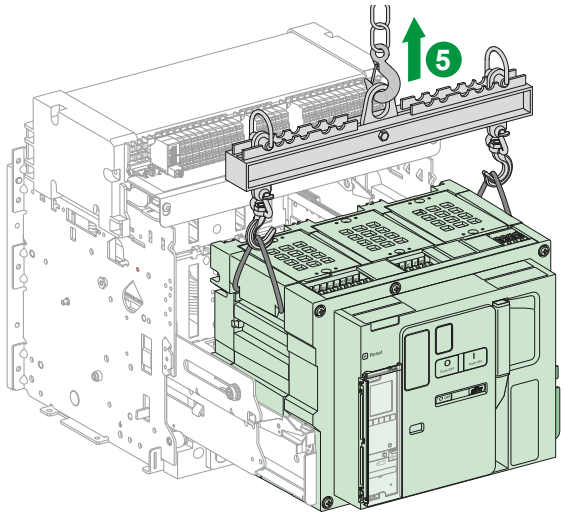

⚠ DANGER / DANGER / PELIGRO / GEFAHR / PERICOLO / PERIGO / ОПАСНОСТЬ / 危险

HAZARD OF DEVICE FALLING ● Be sure lifting equipment has lifting capacity for the device being lifted. ● Follow manufacturer's instructions for use of lifting equipment. ● Wear hard hat, safety shoes and heavy gloves. **Failure to follow these instructions will result in death or serious injury.**	**RISQUE DE CHUTE DE L'APPAREIL** ● Assurez-vous que l'appareil de levage a la capacité de levage pour l'appareil à soulever. ● Suivez les consignes du fabricant lors de l'utilisation de l'appareil de levage. ● Portez un casque de protection, des chaussures de sécurité et des gants épais. **Si ces directives ne sont pas respectées, cela entraînera la mort ou des blessures graves.**	**RIESGO DE CAÍDA DEL APARATO** ● Asegúrese de que el equipo de elevación tiene la capacidad suficiente para el dispositivo que desea elevar. ● Para utilizar el equipo de elevación, siga las instrucciones del fabricante. ● Lleve puestos casco, calzado de seguridad y guantes pesados. **El incumplimiento de estas instrucciones provocará lesiones graves o incluso la muerte.**	**GEFAHR DES FALLENS DES GERÄTS** ● Stellen Sie sicher, dass das Hebezeug eine ausreichende Tragfähigkeit hat, um das Gerät zu heben. ● Folgen Sie den Anweisungen des Herstellers bei der Verwendung von Hebezeug. ● Tragen Sie einen Schutzhelm, Sicherheitsschuhe und dicke Handschuhe. **Die Nichtbeachtung dieser Anweisungen führt zu Tod oder schweren Verletzungen.**
PERICOLO DI CADUTA DEL DISPOSITIVO ● Verificare che il dispositivo di sollevamento abbia una capacità di sollevamento adatta al dispositivo da sollevare. ● Seguire le istruzioni del produttore per l'uso dell'apparecchiatura di sollevamento. ● Indossare un casco rigido, scarpe di sicurezza e guanti spessi. **Il mancato rispetto di queste istruzioni provocherà morte o gravi infortuni.**	**PERIGO DE QUEDA DO DISPOSITIVO** ● Certifique-se de que o mecanismo elevatório é adequado para o dispositivo que pretende elevar. ● Siga as instruções do fabricante sobre como utilizar equipamento de elevação. ● Use um capacete, calçado de segurança e luvas grossas. **A não observância destas instruções resultará em morte, ou ferimentos graves.**	**ОПАСНОСТЬ ПАДЕНИЯ УСТРОЙСТВА** ● Убедитесь, что подъемное оборудование способно выдержать вес поднимаемого узла. ● Эксплуатацию подъемного оборудования осуществляйте согласно инструкциям изготовителя. ● Для выполнения работ надевайте каску, защитную обувь и прочные рукавицы. **Несоблюдение этих инструкций приведет к смерти или серьезной травме.**	设备掉落风险 ● 确保吊装设备有足够的吊装 能力来吊起设备。 ● 关于吊装设备的使用，请遵循制造商说明 。 ● 穿戴安全帽、安全鞋和厚手套。 不遵循上述说明将导致人员伤亡。

NOTICE / AVIS / AVISO / HINWEIS / AVVISO / AVISO / УВЕДОМЛЕНИЕ / 注意

HAZARD OF EQUIPMENT DAMAGE Chassis must be secured when installing or removing device. **Failure to follow these instructions can result in equipment damage.**	**RISQUE DE DOMMAGES MATÉRIELS** Fixez le châssis avant d'installer ou d'enlever l'appareil. **Si ces directives ne sont pas respectées, cela peut entraîner des dommages matériels.**	**PELIGRO DE DAÑO AL EQUIPO** El chasis debe estar sujeto al instalar o extraer el aparato. **El incumplimiento de estas instrucciones puede causar daño al equipo.**	**GEFAHR EINER BESCHÄDIGUNG DES GERÄTS** Die Einschubkassette muss bei Installation oder Entfernen des Geräts gesichert sein. **Die Nichtbeachtung dieser Anweisungen kann Sachschäden zur Folge haben.**
PERICOLO DI DANNEGGIAMENTO DELL'APPARECCHIATURA Il telaio deve essere fissato quando si installa o si rimuove il dispositivo. **Il mancato rispetto di queste istruzioni può provocare danni alle apparecchiature.**	**RISCO DE DANOS NO EQUIPAMENTO** Quando instalar ou remover o dispositivo, é necessário fixar o chassis. **A não observância destas instruções pode provocar danos no equipamento.**	**ОПАСНОСТЬ ПОВРЕЖДЕНИЯ ОБОРУДОВАНИЯ** Во время установки или извлечения аппарата необходимо зафиксировать шасси. **Несоблюдение этих инструкций может привести к повреждению оборудования.**	可能有设备损坏的风险 安装或拆卸 设备时，必须固定抽架。 不遵循上述说明可能导致设备损坏。

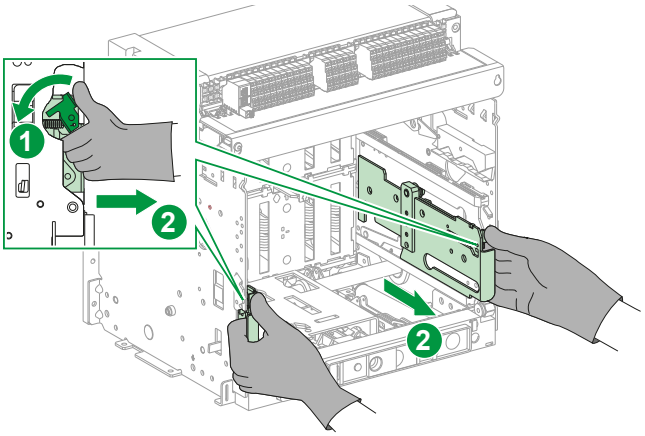

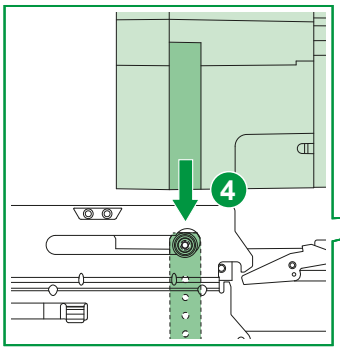

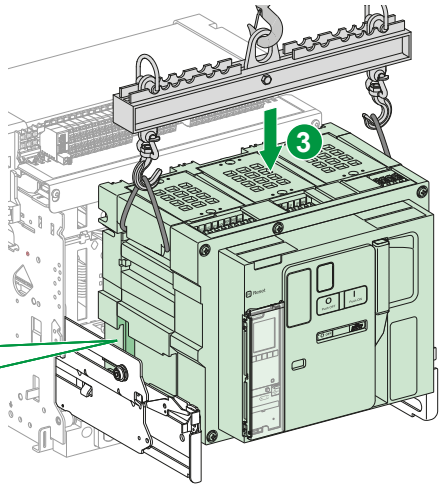

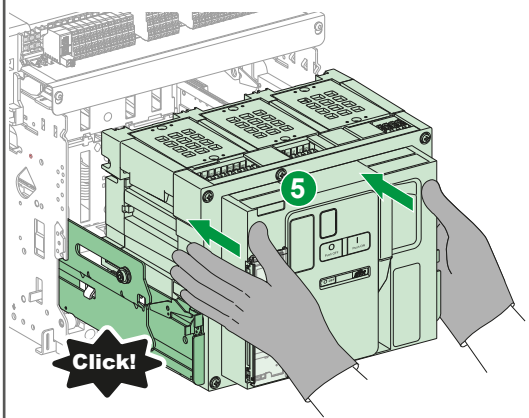

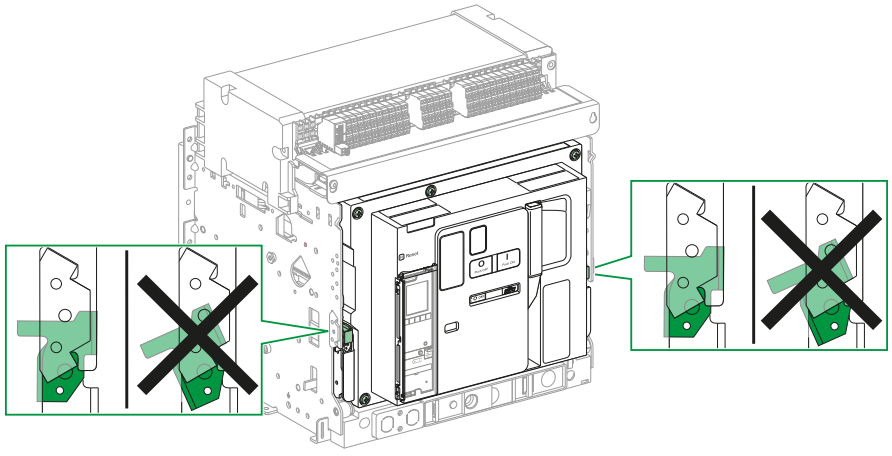

NOTICE / AVIS / AVISO / HINWEIS / AVVISO / AVISO / УВЕДОМЛЕНИЕ / 注意

HAZARD OF DEVICE FALLING
- Use the provided racking handle to rack the device into or out of chassis.
- Do not use power tools for racking.
- Do not turn the handle after position release button has popped out.
- The Micrologic transparent cover must be closed during all racking operations.

Failure to follow these instructions can result in equipment damage.

RISQUE DE CHUTE DE L'APPAREIL
- Utilisez la manivelle fournie pour embrocher ou débrocher l'appareil dans le châssis.
- N'utilisez pas d'outils électriques pour l'embrochage.
- Ne tournez pas la poignée lorsque le bouton-poussoir d'acquittement est sorti.
- Le capot transparent du Micrologic doit être fermé pendant les opérations d'embrochage.

Si ces directives ne sont pas respectées, cela peut entraîner des dommages matériels.

RIESGO DE CAÍDA DEL APARATO
- Use la manivela proporcionada para montar o desmontar el dispositivo en el chasis
- No use herramientas eléctricas para el montaje.
- No gire la manivela una vez que el botón pulsador de posición de desbloqueo haya saltado hacia fuera.
- La tapa transparente Micrologic debe estar cerrada en todas las operaciones de montaje.

El incumplimiento de estas instrucciones puede causar daño al equipo.

GEFAHR DES FALLENS DES GERÄTS
- Verwenden Sie die beigefügte Handkurbel, um das Gerät in die oder aus der Einschubkassette zu bewegen.
- Verwenden Sie keine Elektrowerkzeuge, um das Gerät zu bewegen.
- Drehen Sie die Kurbel nicht weiter, wenn die Positionsentsperrungstaste sich löst und nicht mehr hineingedrückt ist.
- Die durchsichtige Abdeckung des Micrologic muss bei allen Kurbelbewegungen geschlossen sein.

Die Nichtbeachtung dieser Anweisungen kann Sachschäden zur Folge haben.

PERICOLO DI CADUTA DEL DISPOSITIVO
- Usare la leva di inserzione/estrazione fornita per inserire il dispositivo nel telaio o estrarlo.
- Non utilizzare utensili alimentati per inserzione/estrazione.
- Non ruotare la leva dopo l'uscita del pulsante di rilascio posizione.
- Il coperchio trasparente Micrologic deve essere chiuso durante tutte le operazioni di inserimento/rimozione.

Il mancato rispetto di queste istruzioni può provocare danni alle apparecchiature.

PERIGO DE QUEDA DO DISPOSITIVO
- Utilize a manivela para inserir ou retirar o dispositivo do chassis.
- Não utilize ferramentas elétricas para inserir ou retirar o dispositivo.
- Não rode a alavanca depois do botão de libertação de posição se soltar.
- A tampa transparente do Micrologic deve ser fechada durante todas as operações de inserção e remoção.

A não observância destas instruções pode provocar danos no equipamento.

ОПАСНОСТЬ ПАДЕНИЯ УСТРОЙСТВА
- Используйте предоставляемую рукоятку для вкатывания, чтобы извлечь аппарат из шасси или установить его в шасси.
- Не используйте для извлечения или установки механизмы с электроприводом.
- Не поворачивайте рукоятку после выпадения кнопки квитирования положения.
- Во время выполнения всех действий по извлечению или установке прозрачная крышка Micrologic должна быть закрыта.

Несоблюдение этих инструкций может привести к повреждению оборудования.

设备掉落风险
- 使用摇进摇出手柄将设备 摇进摇出抽架。
- 请勿使用电动工具来摇进摇出。
- 位置释放按钮弹出后，请勿转动 手柄。
- 在所有进退操作中，必须合上 Micrologic 透明 罩。

不遵循上述说明可能导致设备损坏。

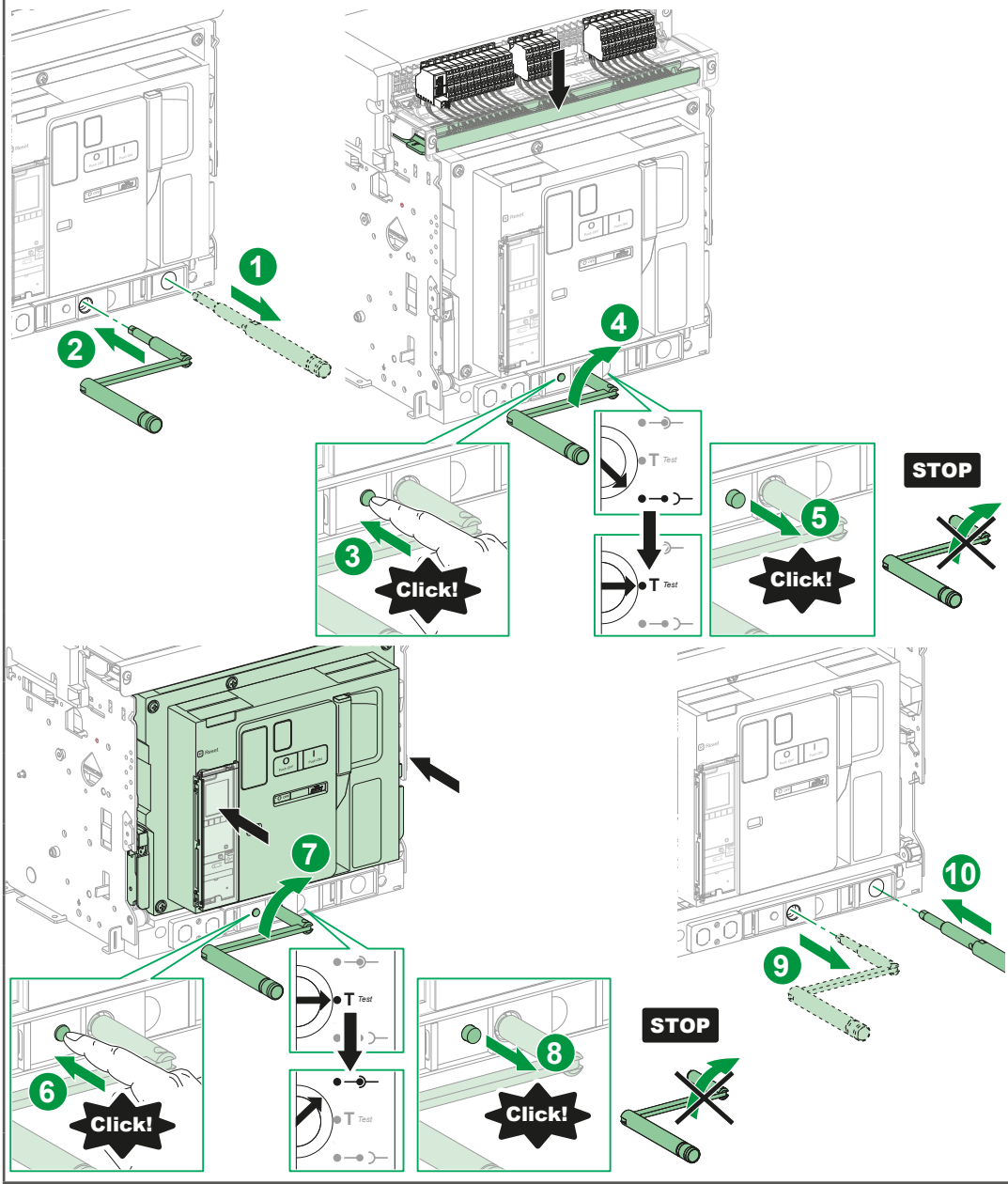

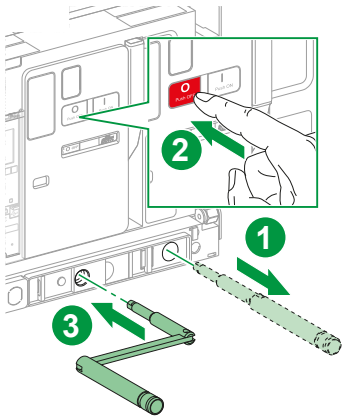

en If the IBPO racking interlock option is installed, press the opening pushbutton to allow insertion of the racking handle.

fr Si l'option de verrouillage d'embrochage IBPO est installée, appuyez sur le bouton-poussoir d'ouverture pour insérer la manivelle.

es Si se instala la opción del interenclavamiento del botón de apertura-acceso a la manivela IBPO, pulse el botón pulsador de apertura para permitir la inserción de la manivela.

de Wenn die IBPO Verriegelung der Kurbeleinführung installiert ist, drücken Sie die AUS-Taste, um das Einsetzen der Handkurbel zu ermöglichen.

it Se l'opzione di blocco leva IBPO è installata, premere il pulsante di apertura per consentire l'inserimento della leva di inserzione/estrazione.

pt Se o intertravamento de inserção IBPO estiver instalado, prima o botão de abertura para permitir a inserção da manivela.

ru Если в аппарате предусмотрена блокировка вкатывания IBPO, нажмите кнопку отключения, чтобы иметь возможность вставить рукоятку для вкатывания.

zh 若已安装 IBPO 进退联锁选项 ，可按分闸按钮 以插入摇进摇出手柄。

5 Storage / Stockage / Almacenamiento / Lagerung / Conservazione / Armazenamento / Хранение / 储存

5.1 Using a Forklift / Utilisation d'un chariot-élévateur / Uso de una carretilla elevadora / Verwenden eines Gabelstaplers / Uso di un muletto / Utilizar um empilhador / Использование вилочного погрузчика / 使用叉车

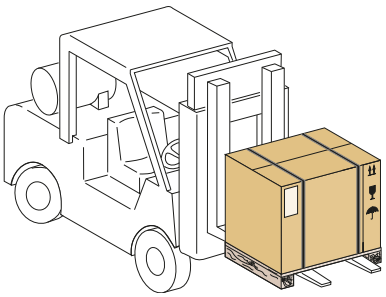

5.2 Storing Device / Stockage de l'appareil / Almacenamiento del aparato / Lagerung des Geräts / Conservazione dispositivo / Armazenar o dispositivo / Хранение аппарата / 储存设备

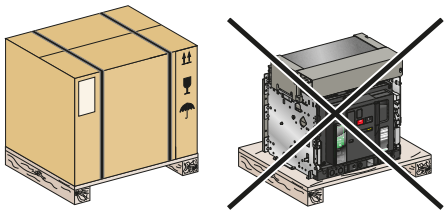

- en Store device in original shipping carton or other protective weatherproof covering.
- fr Conservez l'appareil dans son colis d'expédition d'origine ou une autre protection étanche.
- es Almacene el aparato en su caja original u otras cubiertas de protección impermeables.
- de Lagern Sie das Gerät in der Originalverpackung oder verwenden Sie eine wetterbeständige Schutzabdeckung.
- it Conservare il dispositivo nell'imballaggio di spedizione originale o in altra copertura protettiva resistente all'acqua.
- pt Armazene o dispositivo na embalagem de envio original ou noutra cobertura adequada às condições meteorológicas.
- ru Храните аппарат в оригинальной картонной упаковке для транспортировки или другой защитной упаковке, устойчивой к атмосферным воздействиям.
- zh 将设备储存在原装运箱中，或使用其他防水保护罩。

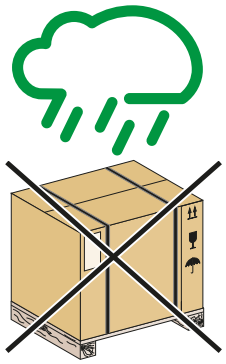

- en Do not store outside.
- fr Ne le stockez pas en extérieur.
- es No lo almacene al aire libre.
- de Lagern Sie das Gerät nicht draußen.
- it Non conservare all'esterno.
- pt Não armazene no exterior.
- ru Хранить только в помещениях.
- zh 请勿放在室外。

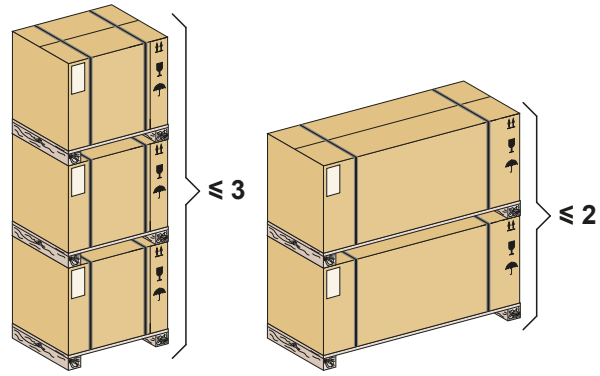

- en Do not overstack device.
- fr N'empilez pas plusieurs appareils.
- es No lo almacene en sitios elevados.
- de Stapeln Sie das Gerät nicht in Übermaßen.
- it Non impilare i dispositivi.
- pt Não empilhe o dispositivo.
- ru Не перегружать аппарат.
- zh 设备堆放层数不得超限。

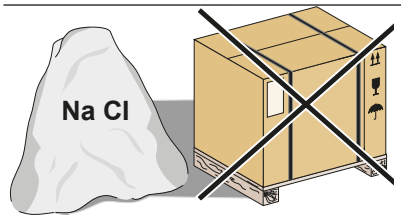

- en Do not store device in corrosive or salt-air environment.
- fr Ne stockez pas l'appareil dans un environnement corrosif ou à atmosphère saline.
- es No almacene el aparato en un ambiente corrosivo o salino.
- de Lagern Sie das Gerät nicht in korrosiven Umgebungen oder Meeresluft (salzhaltige Luft).
- it Non conservare il dispositivo in ambienti corrosivi o con atmosfera ad alto contenuto salino.
- pt Não armazene o dispositivo num ambiente corrosivo ou sujeito a sal e ar.
- ru Запрещается хранить аппарат в коррозионной среде или в среде с высоким содержанием соли в воздухе.
- zh 请勿将设备储存在腐蚀性或空气中含盐的环境中。

en	Storage temperature	+85 °C +185 °F -25 °C -13 °F	With Micrologic control unit	+85 °C +185 °F -40 °C -40 °F	Without Micrologic control unit
fr	Température de stockage		Avec unité de contrôle Micrologic		Sans unité de contrôle Micrologic
es	Temperatura de almacenamiento		Con la unidad de control Micrologic		Sin la unidad de control Micrologic
de	Lagertemperatur		Mit Micrologic Auslösesystem		Ohne Micrologic Auslösesystem
it	Temperatura di conservazione		Con unità di controllo Micrologic		Senza unità di controllo Micrologic
pt	Temperatura de armazenamento		Com a unidade de controle Micrologic		Sem a unidade de controle Micrologic
ru	Температура хранения		С блоком контроля и управления Micrologic		Без блока контроля и управления Micrologic
zh	储存温度		带 Micrologic 控制单元		无 Micrologic 控制单元

6 Unpacking / Déballage / Desembalaje / Auspacken / Disimballaggio / Desembalagem / Распаковка / 开箱

6.1 Remove Packing / Retrait de l'emballage / Retirada del embalaje / Entfernen der Verpackung / Rimuovere l'imballaggio / Remover a embalagem / Распаковка / 拆除包装

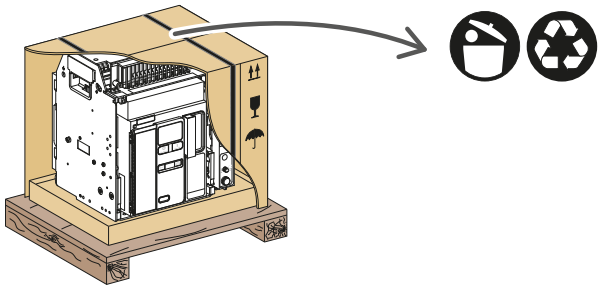

en Recycling Packaging
The device packaging materials can be recycled. Please help protect the environment by recycling them in appropriate containers.
Thank you for playing your part in protecting the environment.

fr Recyclage de l'emballage
Les matériaux d'emballage sont recyclables. Protégez l'environnement en les recyclant dans les conteneurs appropriés.
Merci de contribuer à la protection de l'environnement.

es Reciclaje del embalaje
Los materiales de embalaje del aparato pueden reciclarse. Ayude a proteger el medio ambiente reciclándolos en los contenedores adecuados.
Gracias por colaborar en la protección del medio ambiente.

de Recyceln der Verpackung
Das Material der Geräteverpackung kann recycelt werden. Bitte recyceln Sie das Material in den vorgesehenen Wertstoffcontainern und helfen Sie so, die Umwelt zu schützen.
Vielen Dank für Ihren Beitrag zum Umweltschutz.

it Riciclo dell'imballaggio
I materiali di imballaggio del dispositivo possono essere riciclati. Proteggere l'ambiente riciclandoli in contenitori appropriati.
Grazie per voler fare la propria parte nella protezione dell'ambiente.

pt Reciclar a embalagem
Os materiais de embalagem do dispositivo podem ser reciclados. Ajude a proteger o ambiente, reciclando as embalagens em contentores adequados.
Obrigado por proteger o ambiente.

ru Пригодная для переработки упаковка
Материалы, используемые при изготовлении упаковки аппарата, подлежат переработке. Помогите защитить окружающую среду, утилизируя их в соответствующих контейнерах.
Спасибо, что принимаете участие в защите окружающей среды.

zh 包装回收
设备包装材料可以回收利用。请用合适的容器进行回收，帮助保护环境。
感谢您为保护环境发挥应有的作用。

6.2 Drawout Device Without Chassis / Appareil débrochable sans châssis / Aparato seccionable sin chasis / Einschubgerät ohne Einschubkassette /Dispositivo estraibile senza telaio / Dispositivo extraível sem chassis / Выкатной аппарат без шасси / 无抽架的抽出式设备

⚠ DANGER / DANGER / PELIGRO / GEFAHR / PERICOLO / PERIGO / ОПАСНОСТЬ / 危险			
HAZARD OF DEVICE FALLING ● Be sure lifting equipment has lifting capacity for the device being lifted. ● Follow manufacturer's instructions for use of lifting equipment. ● Wear hard hat, safety shoes and heavy gloves. **Failure to follow these instructions will result in death or serious injury.**	**RISQUE DE CHUTE DE L'APPAREIL** ● Assurez-vous que l'appareil de levage a la capacité de levage pour l'appareil à soulever. ● Suivez les consignes du fabricant lors de l'utilisation de l'appareil de levage. ● Portez un casque de protection, des chaussures de sécurité et des gants épais. **Si ces directives ne sont pas respectées, cela entraînera la mort ou des blessures graves.**	**RIESGO DE CAÍDA DEL APARATO** ● Asegúrese de que el equipo de elevación tiene la capacidad suficiente para el dispositivo que desea elevar. ● Para utilizar el equipo de elevación, siga las instrucciones del fabricante. ● Lleve puestos casco, calzado de seguridad y guantes pesados. **El incumplimiento de estas instrucciones provocará lesiones graves o incluso la muerte.**	**GEFAHR DES FALLENS DES GERÄTS** ● Stellen Sie sicher, dass das Hebezeug eine ausreichende Tragfähigkeit hat, um das Gerät zu heben. ● Folgen Sie den Anweisungen des Herstellers bei der Verwendung von Hebezeug ● Tragen Sie einen Schutzhelm, Sicherheitsschuhe und dicke Handschuhe **Die Nichtbeachtung dieser Anweisungen führt zu Tod oder schweren Verletzungen.**
PERICOLO DI CADUTA DEL DISPOSITIVO ● Verificare che il dispositivo di sollevamento abbia una capacità di sollevamento adatta al dispositivo da sollevare. ● Seguire le istruzioni del produttore per l'uso dell'apparecchiatura di sollevamento ● Indossare un casco rigido, scarpe di sicurezza e guanti spessi. **Il mancato rispetto di queste istruzioni provocherà morte o gravi infortuni.**	**PERIGO DE QUEDA DO DISPOSITIVO** ● Certifique-se de que o mecanismo elevatório é adequado para o dispositivo que pretende elevar. ● Siga as instruções do fabricante sobre como utilizar equipamento de elevação. ● Use um capacete, calçado de segurança e luvas grossas. **A não observância destas instruções resultará em morte, ou ferimentos graves.**	**ОПАСНОСТЬ ПАДЕНИЯ УСТРОЙСТВА** ● Убедитесь, что подъемное оборудование способно выдержать вес поднимаемого узла. ● Эксплуатацию подъемного оборудования осуществляйте согласно инструкциям изготовителя. ● Для выполнения работ надевайте каску, защитную обувь и прочные рукавицы. **Несоблюдение этих инструкций приведет к смерти или серьезной травме.**	设备掉落风险 ● 确保吊装设备有足够的吊装 能力来吊起设备。 ● 关于吊装设备的使用，请遵循制造商说明 。 ● 穿戴安全帽、安全鞋和厚 手套。 **不遵循上述说明将导致人员伤亡。**

MTZ2 3P/4P

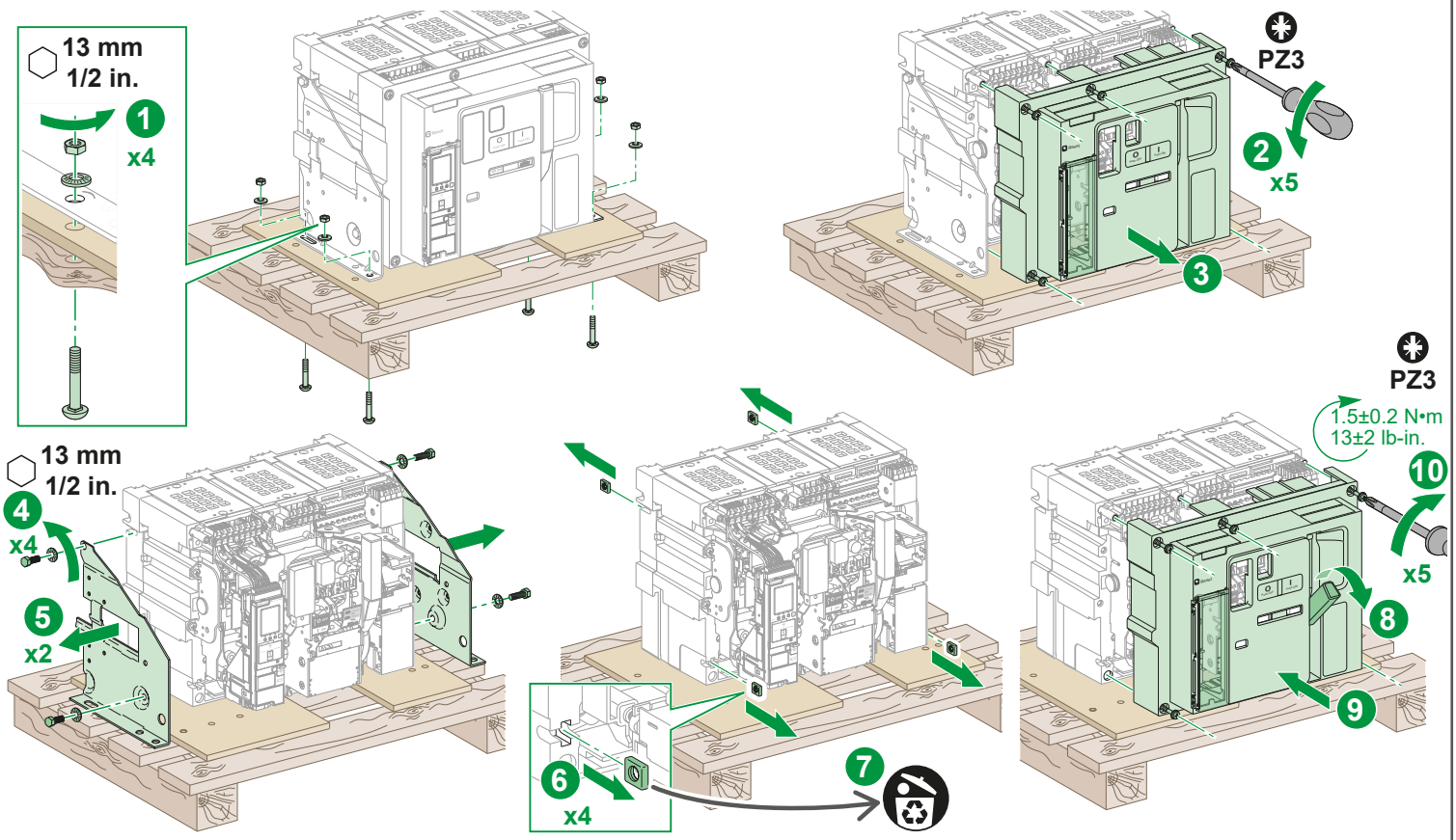

MTZ3 3P/4P

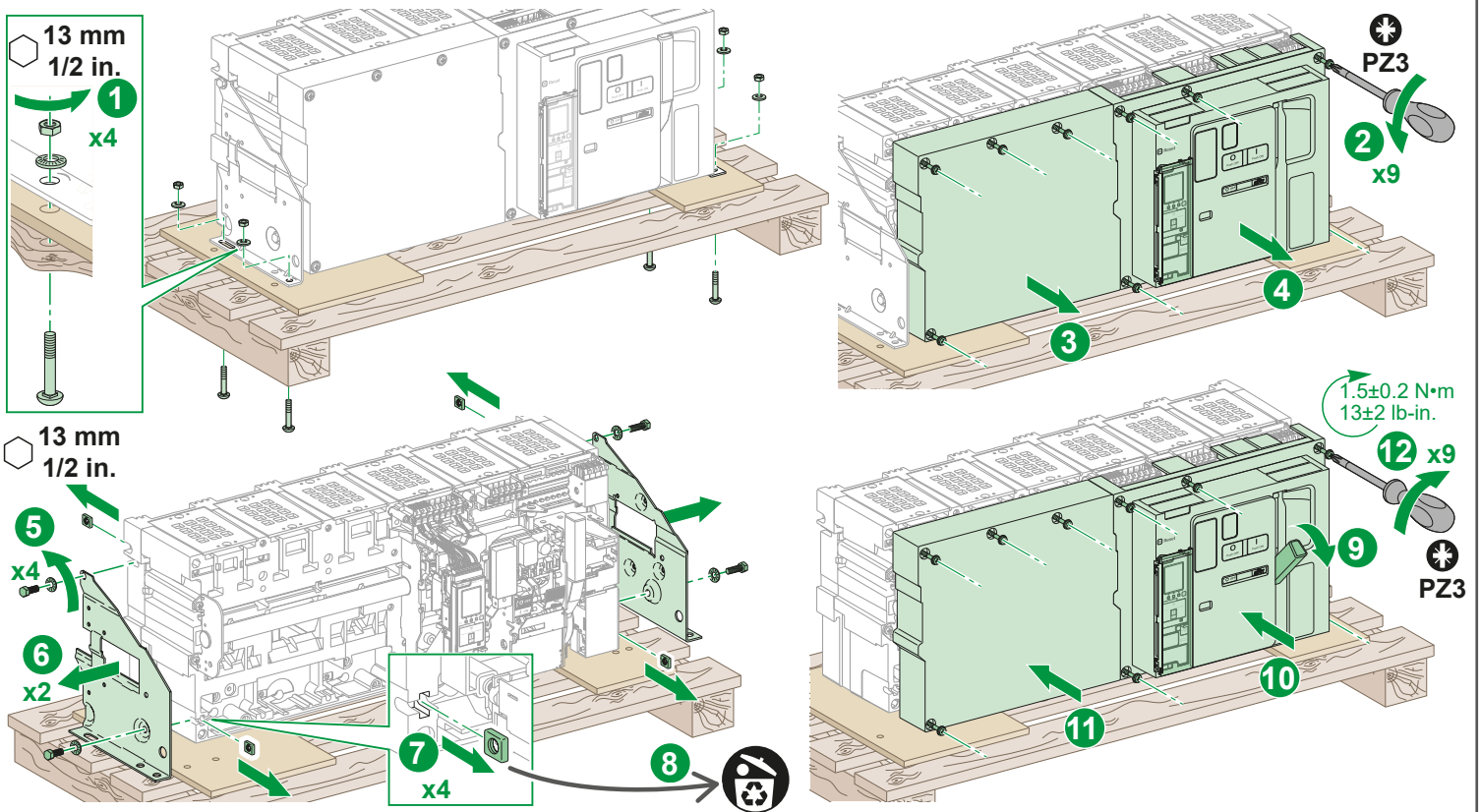

6.3 Chassis / Châssis / Chasis / Einschubkassette / Telaio / Chassis / Шасси / 抽架

MTZ2 3P/4P

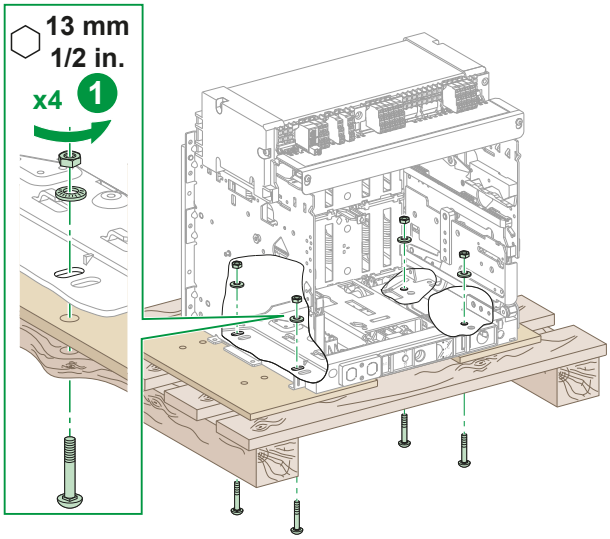

MTZ3 3P/4P

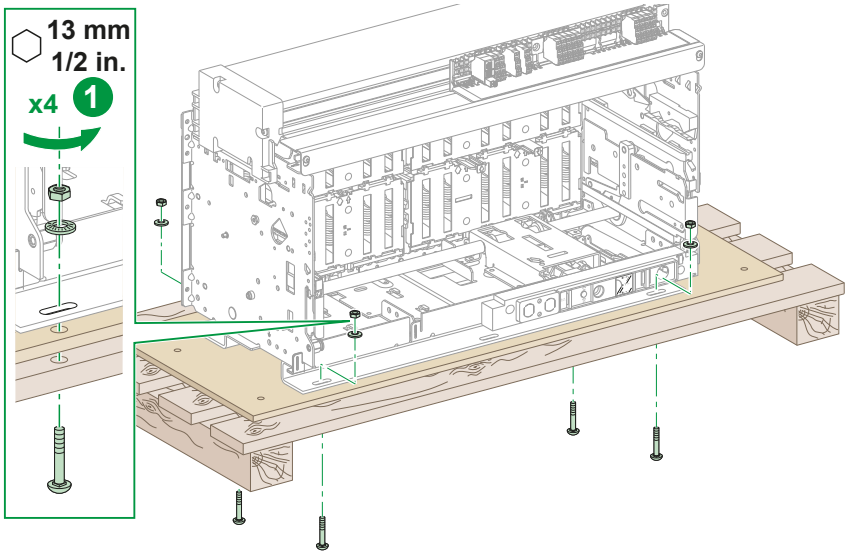

6.4 Drawout Device With Chassis / Appareil débrochable avec châssis / Aparato seccionable con chasis / Einschubgerät mit Einschubkassette / Dispositivo estraibile con telaio / Dispositivo extraível com chassis / Выкатной аппарат с шасси / 带抽架的抽出式设备

en To unpack a device delivered in its chassis:
1. Disconnect the device, see page 17
2. Remove device from chassis, see page 18
3. Remove the empty chassis, see page 24.

fr Pour déballer un appareil fourni dans son châssis :
1. Débrochez l'appareil (voir page 17)
2. Retirez l'appareil du châssis (voir page 18)
3. Enlevez le châssis vide de sa palette (voir page 24).

es Para desembalar un aparato entregado en su chasis:
1. Desconecte el aparato (consulte la página 17)
2. Extraiga el aparato del chasis (consulte la página 18)
3. Extraiga el chasis vacío (consulte la página 24).

de Entpacken eines in seiner Einschubkassette gelieferten Geräts:
1. Trennen Sie das Gerät ab, siehe Seite 17
2. Entfernen Sie das Gerät von der Einschubkassette, siehe Seite 18
3. Entfernen Sie die leere Einschubkassette siehe Seite 24.

it Per disimballare un dispositivo fornito nel proprio telaio:
1. Estrarre il dispositivo, vedere a pagina 17
2. Rimuovere il dispositivo dal telaio, vedere a pagina 18
3. Rimuovere il telaio vuoto, vedere a pagina 24.

pt Para desembalar um dispositivo fornecido com um chassis:
1. Desligue o dispositivo, consulte a página 17
2. Remova o dispositivo do chassis, consulte a página 18
3. Remova os chassis vazios, consulte a página 24.

ru Для распаковки аппарата, доставленного в шасси, необходимо выполнить следующие действия.
1. Отсоединить аппарат (см. с. 17)
2. Извлечь аппарат из шасси (см. с. 18)
3. Снимите шасси без аппарата (см. с. 24).

zh 拆开随同抽架交付的设备：
1. 断开设备连接，参见第 17 页
2. 从抽架中拆下设备，参见 第 18 页
3. 移除空抽架，参见 第 24 页

7 Handling / Manutention / Manipulación / Umgang / Movimentazione / Manuseamento / Погрузочно-разгрузочные работы / 搬运

⚠ DANGER / DANGER / PELIGRO / GEFAHR / PERICOLO / PERIGO / ОПАСНОСТЬ / 危险

HAZARD OF DEVICE FALLING ● Be sure lifting equipment has lifting capacity for the device being lifted. ● Follow manufacturer's instructions for use of lifting equipment. ● Wear hard hat, safety shoes and heavy gloves. **Failure to follow these instructions will result in death or serious injury.**	**RISQUE DE CHUTE DE L'APPAREIL** ● Assurez-vous que l'appareil de levage a la capacité de levage pour l'appareil à soulever. ● Suivez les consignes du fabricant lors de l'utilisation de l'appareil de levage. ● Portez un casque de protection, des chaussures de sécurité et des gants épais. **Si ces directives ne sont pas respectées, cela entraînera la mort ou des blessures graves.**	**RIESGO DE CAÍDA DEL APARATO** ● Asegúrese de que el equipo de elevación tiene la capacidad suficiente para el dispositivo que desea elevar. ● Para utilizar el equipo de elevación, siga las instrucciones del fabricante. ● Lleve puestos casco, calzado de seguridad y guantes pesados. **El incumplimiento de estas instrucciones provocará lesiones graves o incluso la muerte.**	**GEFAHR DES FALLENS DES GERÄTS** ● Stellen Sie sicher, dass das Hebezeug eine ausreichende Tragfähigkeit hat, um das Gerät zu heben. ● Folgen Sie den Anweisungen des Herstellers bei der Verwendung von Hebezeug ● Tragen Sie einen Schutzhelm, Sicherheitsschuhe und dicke Handschuhe **Die Nichtbeachtung dieser Anweisungen führt zu Tod oder schweren Verletzungen.**
PERICOLO DI CADUTA DEL DISPOSITIVO ● Verificare che il dispositivo di sollevamento abbia una capacità di sollevamento adatta al dispositivo da sollevare. ● Seguire le istruzioni del produttore per l'uso dell'apparecchiatura di sollevamento ● Indossare un casco rigido, scarpe di sicurezza e guanti spessi. **Il mancato rispetto di queste istruzioni provocherà morte o gravi infortuni.**	**PERIGO DE QUEDA DO DISPOSITIVO** ● Certifique-se de que o mecanismo elevatório é adequado para o dispositivo que pretende elevar. ● Siga as instruções do fabricante sobre como utilizar equipamento de elevação. ● Use um capacete, calçado de segurança e luvas grossas. **A não observância destas instruções resultará em morte, ou ferimentos graves.**	**ОПАСНОСТЬ ПАДЕНИЯ УСТРОЙСТВА** ● Убедитесь, что подъемное оборудование способно выдержать вес поднимаемого узла. ● Эксплуатацию подъемного оборудования осуществляйте согласно инструкциям изготовителя. ● Для выполнения работ надевайте каску, защитную обувь и прочные рукавицы. **Несоблюдение этих инструкций приведет к смерти или серьезной травме.**	设备掉落风险 ● 确保吊装设备有足够的吊装 能力来吊起设备。 ● 关于吊装设备的使用，请遵循制造商说明 。 ● 穿戴安全帽、安全鞋和厚 手套。 不遵循上述说明将导致人员伤亡。

7.1 Weights / Poids / Pesos / Gewichte / Masse / Pesos / Macca / 重量

	MTZ2		MTZ3	
3P	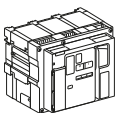	50 kg 110 lbs	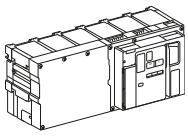	120 kg 265 lbs
	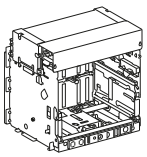	40 kg 88 lbs	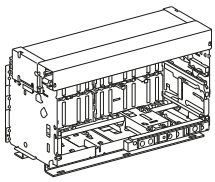	105 kg 231 lbs
	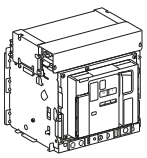	90 kg 198 lbs	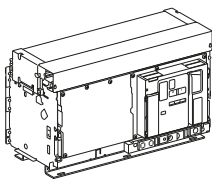	225 kg 496 lbs
4P	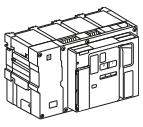	65 kg 143 lbs	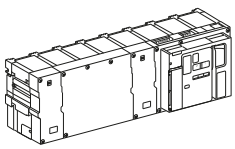	160 kg 353 lbs
	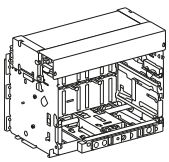	55 kg 121 lbs	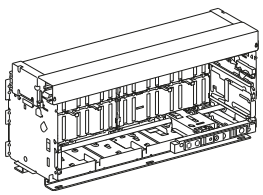	140 kg 309 lbs
	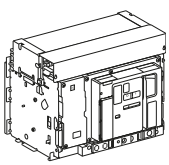	120 kg 265 lbs	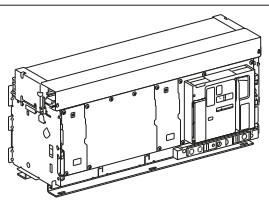	300 kg 661 lbs

NOTICE / AVIS / AVISO / HINWEIS / AVVISO / AVISO / УВЕДОМЛЕНИЕ / 注意			
HAZARD OF EQUIPMENT DAMAGE ● Do not lift device in the chassis. ● Chassis must be secured when installing or removing device. **Failure to follow these instructions can result in equipment damage.**	**RISQUE DE DOMMAGES MATÉRIELS** ● Déplacez l'appareil et son châssis séparément, ne déplacez pas l'appareil installé dans son châssis. ● Fixez le châssis avant d'installer ou d'enlever l'appareil. **Si ces directives ne sont pas respectées, cela peut entraîner des dommages matériels.**	**PELIGRO DE DAÑO AL EQUIPO** ● No eleve el aparato en el chasis. ● El chasis debe estar sujeto al instalar o extraer el aparato. **El incumplimiento de estas instrucciones puede causar daño al equipo.**	**GEFAHR EINER BESCHÄDIGUNG DES GERÄTS** ● Heben Sie das Gerät nicht in der Einschubkassette an. ● Die Einschubkassette muss bei Installation oder Entfernen des Geräts gesichert sein. **Die Nichtbeachtung dieser Anweisungen kann Sachschäden zur Folge haben.**
PERICOLO DI DANNEGGIAMENTO DELL'APPARECCHIATURA ● Non sollevare il dispositivo nel telaio. ● Il telaio deve essere fissato quando si installa o si rimuove il dispositivo. **Il mancato rispetto di queste istruzioni può provocare danni alle apparecchiature.**	**RISCO DE DANOS NO EQUIPAMENTO** ● Não levante o dispositivo fixado no chassis. ● Quando instalar ou remover o dispositivo, é necessário fixar o chassis. **A não observância destas instruções pode provocar danos no equipamento.**	**ОПАСНОСТЬ ПОВРЕЖДЕНИЯ ОБОРУДОВАНИЯ** ● Не поднимайте аппарат, установленный в шасси. ● Во время установки или извлечения аппарата необходимо зафиксировать шасси. **Несоблюдение этих инструкций может привести к повреждению оборудования.**	可能有设备损坏的风险 ● 请勿吊运抽架中的设备。 ● 安装或拆卸 设备时，必须固定抽架。 不遵循上述说明可能导致设备损坏。

7.2 Lifting Device / Levage de l'appareil / Elevación del aparato / Heben des Geräts / Sollevamento dispositivo / Mecanismo elevatório / Подъем аппарата / 吊装设备

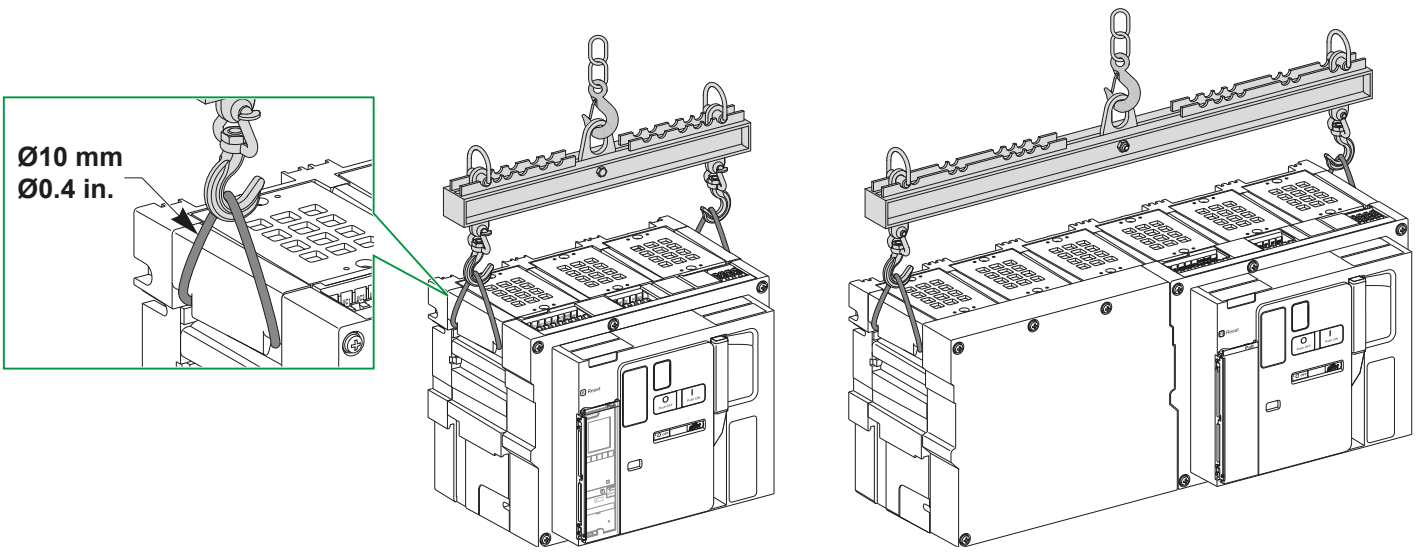

7.3 Lifting Chassis / Levage du châssis / Elevación del chasis / Heben der Einschubkassette / Sollevamento telaio / Chassis elevatório / Подъем шасси / 吊装抽架

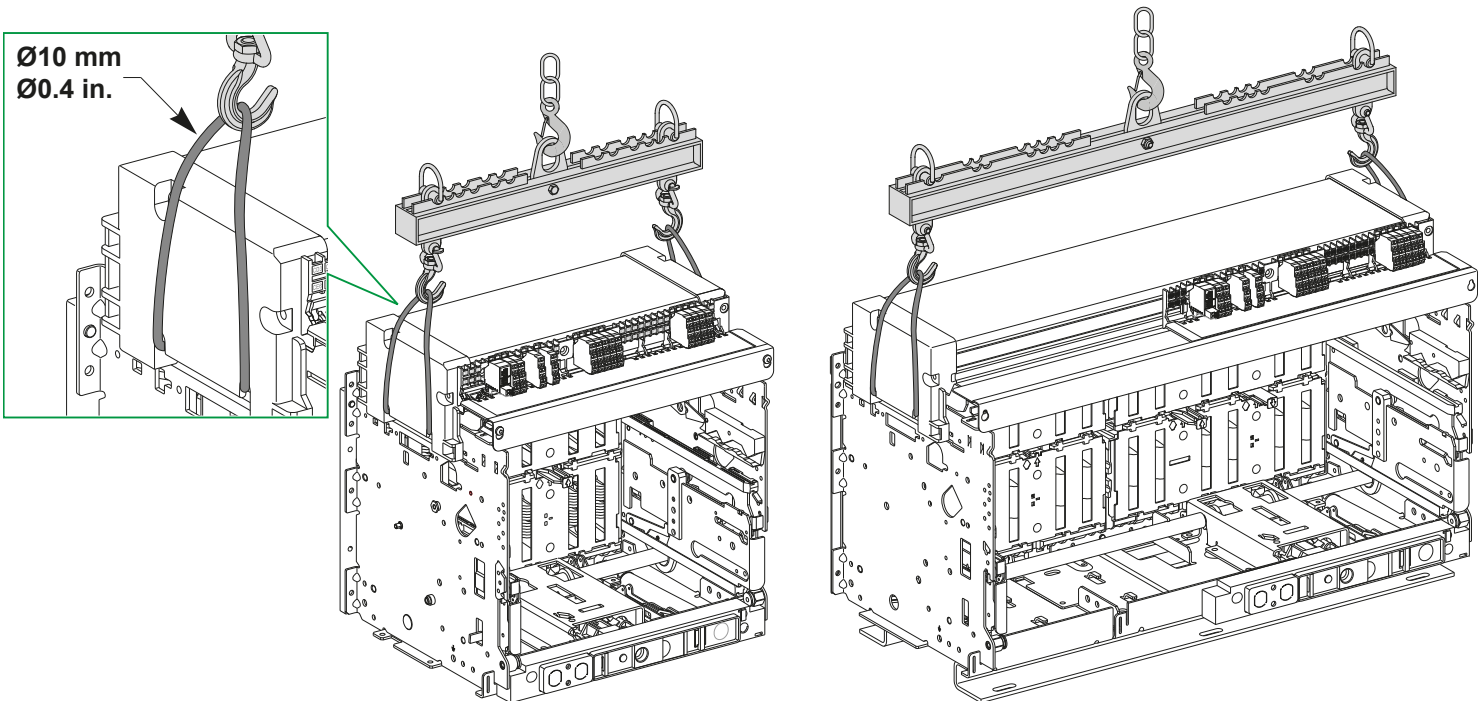

8 Dimensions / Dimensions / Dimensiones / Abmessungen / Misure d'ingombro / Dimensões / Размеры / 尺寸

8.1 Datum / Référence de fixation / Punto de referencia / Festpunkt / Dato / Referência / Точка отсчета / 数据

MTZ2 3P/4P

mm
in.

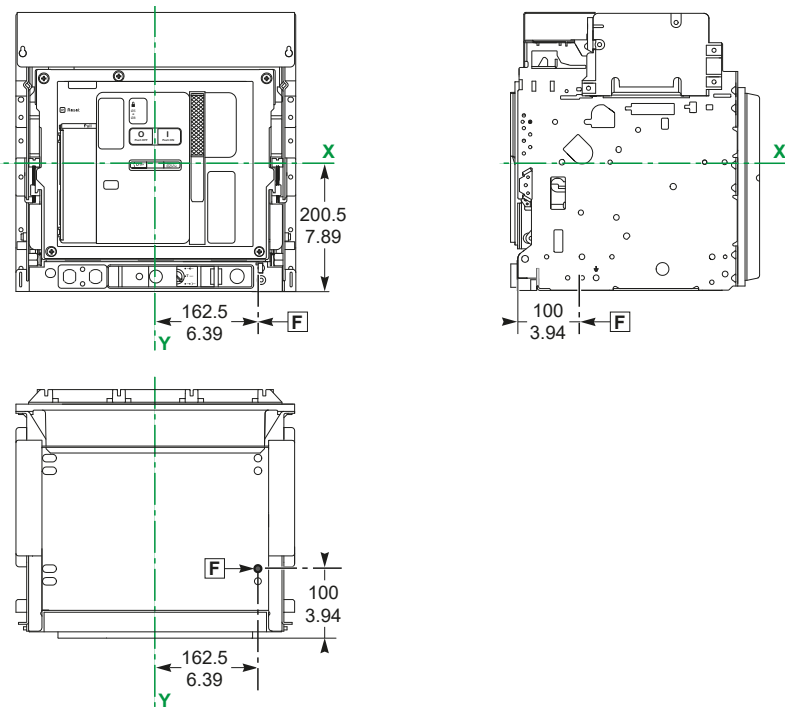

MTZ3 3P/4P

mm
in.

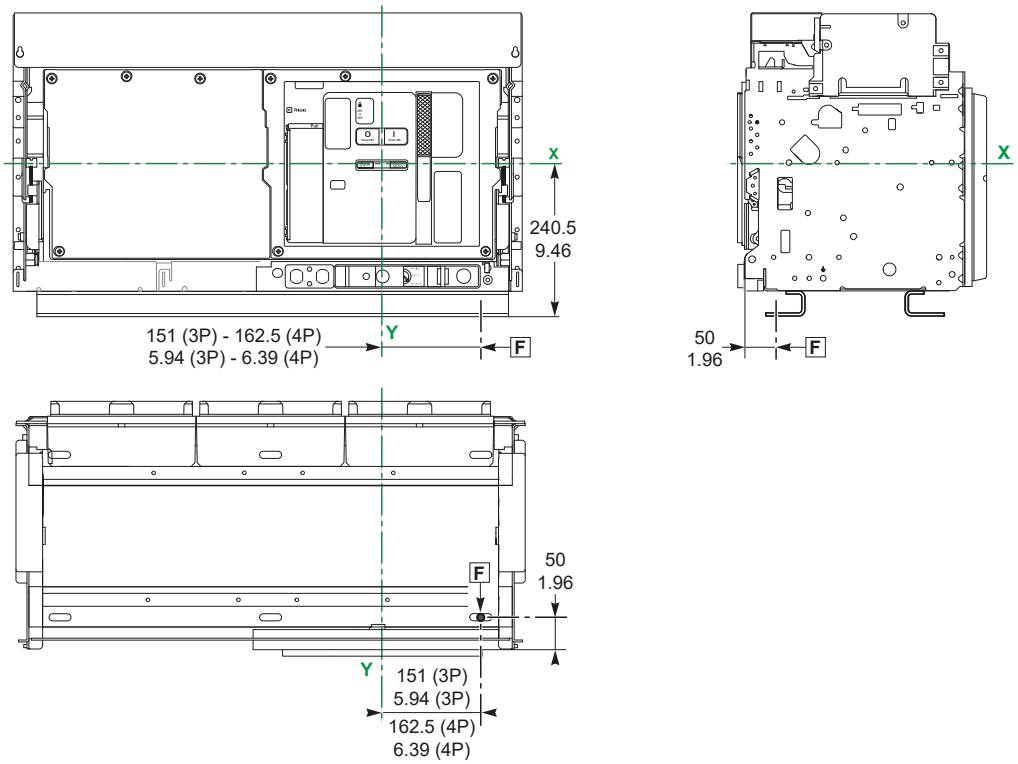

en F = Datum, position of front chassis mounting hole.
X and Y are the symmetry planes for a 3-pole device.

fr F = Référence de fixation, trou de montage du châssis.
Les références X et Y symbolisent les plans de symétrie de l'appareil 3 pôles.

es F = Posición del orificio de montaje del chasis frontal.
X e Y son los planos de simetría de un dispositivo de 3 polos.

de F = Position der vorderseitigen Montagebohrung der Einschubkassette.
X und Y bilden die Symmetrieebene für ein 3-poliges Gerät.

it F = Posizione delforo di montaggio telaio frontale.
X e Y sono i piani di simmetria per un dispositivo tripolare.

pt F = Posição do orifício de montagem do chassis dianteiro.
X e Y representam os planos de simetria de um dispositivo de 3 polos.

ru F = Расположение переднего монтажного отверстия для шасси.
X и Y являются плоскостями симметрии для 3-полюсного аппарата.

zh F = 前抽架安装孔位置。
X 和 Y 是 3 极断路器的对称平面。

8.2 Safety Clearance / Périmétre de sécurité / Distancia de seguridad / Sicherheitsabstand / Distanza di sicurezza / Distância de segurança / Безопасный зазор / 安全间距

MTZ2/MTZ3 3P/4P

⚠ ⚠ DANGER / DANGER / PELIGRO / GEFAHR / PERICOLO / PERIGO / ОПАСНОСТЬ / 危险

HAZARD OF ELECTRIC SHOCK, EXPLOSION OR ARC FLASH

Safety clearance requirements must be met for proper operation of the equipment.

Failure to follow these instructions will result in death or serious injury.

RISQUE D'ÉLECTROCUTION, D'EXPLOSION OU ÉCLAIR D'ARC ÉLECTRIQUE

Les distances de sécurité doivent être respectées pour le bon fonctionnement de l'équipement.

Si ces directives ne sont pas respectées, cela entraînera la mort ou des blessures graves.

PELIGRO DE DESCARGA ELÉCTRICA, EXPLOSIÓN O DESTELLO POR ARQUEO

Para que el equipo funcione correctamente, deben cumplirse los requisitos de distancia de seguridad.

El incumplimiento de estas instrucciones provocará lesiones graves o incluso la muerte.

GEFAHR VON ELEKTRISCHEM SCHLAG, EXPLOSION ODER LICHTBOGEN

Es müssen die erforderlichen Sicherheitsabstände eingehalten werden, damit der ordnungsgemäße Betrieb der Geräte gewährleistet werden kann.

Die Nichtbeachtung dieser Anweisungen führt zu Tod oder schweren Verletzungen.

RISCHIO DI FOLGORAZIONE, ESPLOSIONI O ARCO ELETTRICO

Rispettare i requisiti per la distanza di sicurezza per il corretto funzionamento dell'apparecchiatura.

Il mancato rispetto di queste istruzioni provocherà morte o gravi infortuni.

RISCO DE ELECTROCUSSÃO, DE EXPLOSÃO, OU DE ARCO ELÉCTRICO

Os requisitos de distância de segurança devem ser atendidos para que o equipamento funcione adequadamente.

A não observância destas instruções resultará em morte, ou ferimentos graves.

Опасность поражения электрическим током, взрыва или возникновения дуги

Требования к безопасному зазору следует соблюдать для обеспечения надлежащей работы оборудования.

Несоблюдение этих инструкций приведет к смерти или серьезной травме.

电击、爆炸或弧闪的危险

为确保设备正常工作，必须满足安全间隙要求。

不遵循上述说明将导致人员伤亡。

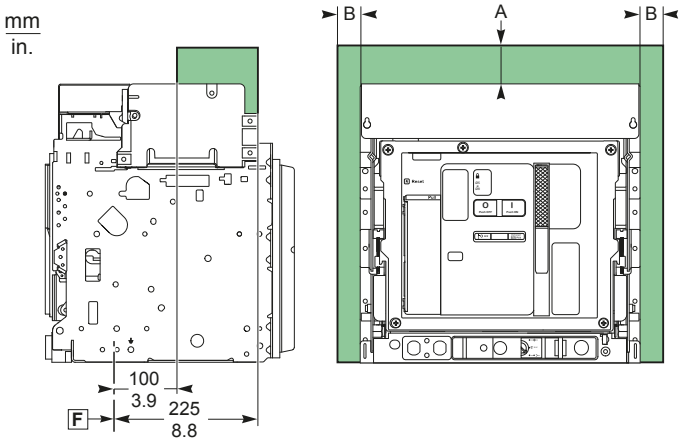

en Insulated parts fr Pièces isolées es Partes aisladas de Isolierte Teile it Parti isolate pt Peças isoladas ru Изолированные детали zh 绝缘部件		en Metal parts fr Pièces métalliques es Partes metálicas de Metallteile it Parti metalliche pt Peças metálicas ru Металлические детали zh 金属部件		en Energized parts fr Pièces sous tension es Partes bajo tensión de Spannungsführende Teile it Parti sotto tensione pt Peças energizadas ru Детали под напряжением zh 带电部件	
A	**B**	**A**	**B**	**A**	**B**
0 0	0 0	0 0	0 0	0 0	60 mm 2.36 in.

8.3 Door Cutout / Découpe de la porte / Orificio de la puerta / Türausschnitt / Ritaglio porta / Corte de porta / Вырез под дверь / 门开孔

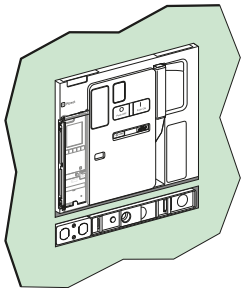

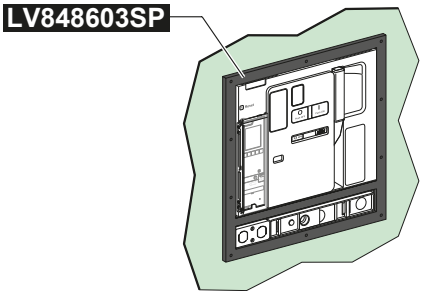

MTZ2 3P/4P

mm
in.

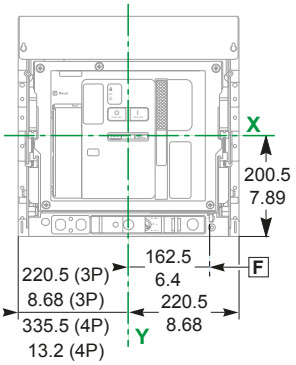

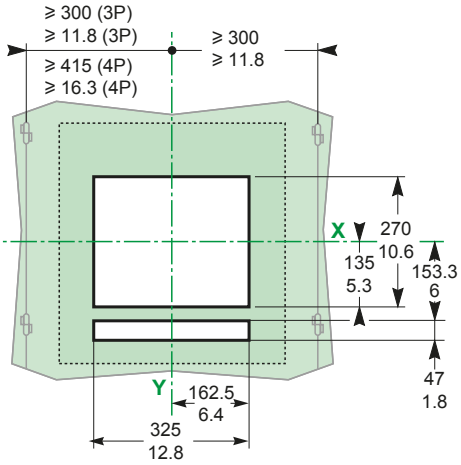

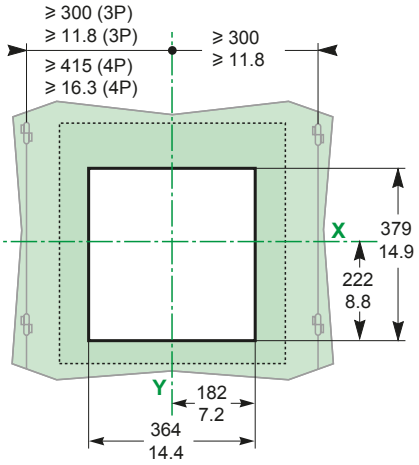

MTZ3 3P/4P

mm
in.

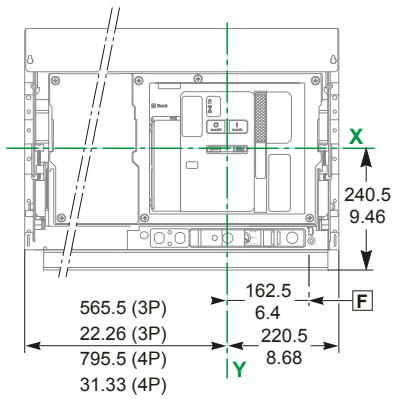

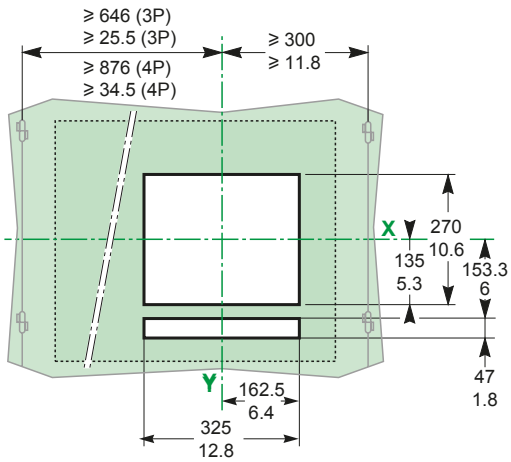

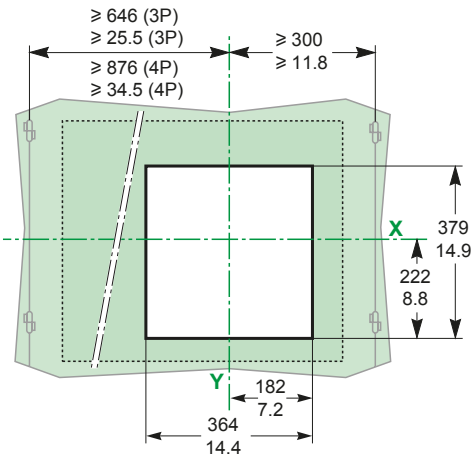

9 Before Working on Equipment / Avant de travailler sur cet équipement / Antes de trabajar en el equipo / Vor Eingriffen am Gerät / Prima di operare sull'apparecchiatura / Antes de trabalhar no equipamento / До начала работы с оборудованием / 设备操作前的准备工作

⚠ ⚠ DANGER / DANGER / PELIGRO / GEFAHR / PERICOLO / PERIGO / ОПАСНОСТЬ / 危险

HAZARD OF ELECTRIC SHOCK, EXPLOSION OR ARC FLASH

- Apply appropriate personal protective equipment (PPE) and follow safe electrical work practices. See NFPA 70E, CSA Z462, NOM 029-STPS or local equivalent.
- This equipment must only be installed and serviced by qualified electrical personnel.
- Turn off all power supplying this equipment before working on or inside equipment.
- Always use a properly rated voltage sensing device to confirm power is off.
- Replace all devices, doors, and covers before turning on power to this equipment.
- Beware of potential hazards, and carefully inspect the work area for tools and objects that may have been left inside the equipment.

Failure to follow these instructions will result in death or serious injury.

RISQUE D'ÉLECTROCUTION, D'EXPLOSION OU ÉCLAIR D'ARC ÉLECTRIQUE

- Portez un équipement de protection individuel (EPI) adapté et respectez les consignes de sécurité électrique courantes. Reportez-vous aux normes NFPA 70E, CSA Z462, NOM 029-STPS ou aux codes locaux en vigueur.
- Seul un personnel qualifié doit effectuer l'installation et l'entretien de cet équipement.
- Débranchez toutes les sources d'alimentation de cet équipement avant d'effectuer toute opération interne ou externe sur celui-ci.
- Utilisez toujours un dispositif de détection de tension ayant une valeur nominale appropriée pour vous assurer que l'alimentation est coupée.
- Replacez tous les dispositifs, les portes et les capots avant de mettre l'équipement sous tension.
- Faites attention aux dangers potentiels et inspectez attentivement la zone de travail pour vous assurer qu'aucun outil ou objet n'est resté à l'intérieur de l'équipement.

Si ces directives ne sont pas respectées, cela entraînera la mort ou des blessures graves.

PELIGRO DE DESCARGA ELÉCTRICA, EXPLOSIÓN O DESTELLO POR ARQUEO

- Utilice equipo de protección personal (EPP) apropiado y siga las prácticas de seguridad eléctricos establecidas. Consulte las normas NFPA 70E, CSA Z462, NOM-029-STPS u otros códigos locales correspondientes.
- Solamente el personal eléctrico calificado deberá instalar y prestar servicio de mantenimiento a este equipo.
- Desconecte todas las fuentes de alimentacion del equipo antes de realizar cualquier trabajo en él.
- Siempre utilice un dispositivo detector de tensión nominal adecuado para confirmar la desenergización del equipo.
- Vuelva a colocar todos los dispositivos, las puertas y las cubiertas antes de volver a energizar el equipo.
- Tenga cuidado con los riesgos potenciales, e inspeccione cuidadosamente la zona de trabajo para comprobar si han quedado herramientas y objetos dentro del equipo.

El incumplimiento de estas instrucciones provocará lesiones graves o incluso la muerte.

GEFAHR VON ELEKTRISCHEM SCHLAG, EXPLOSION ODER LICHTBOGEN

- Tragen Sie persönliche Schutzausrüstung (PSA) und befolgen Sie sichere Verfahren im Umgang mit Elektrogeräten. Siehe NFPA 70E, CSA Z462, NOM 029-STPS oder lokale Entsprechung.
- Diese Geräte dürfen nur von qualifizierten Elektrikern installiert und gewartet werden.
- Schalten Sie vor Arbeiten am bzw.2 im Innern des Geräts die gesamte Spannungsversorgung ab.
- Verwenden Sie für die Prüfung vorhandener Spannung stets einen Spannungsfühler mit zutreffender Bemessungsspannung.
- Bringen Sie alle Vorrichtungen, Türen und Abdeckungen wieder an, bevor Sie das Gerät einschalten.
- Beachten Sie potenzielle Gefahren, und überprüfen Sie den Arbeitsbereich auf Werkzeuge und andere Gegenstände, die sich möglicherweise noch in der Anlage befinden.

Die Nichtbeachtung dieser Anweisungen führt zu Tod oder schweren Verletzungen.

RISCHIO DI FOLGORAZIONE, ESPLOSIONI O ARCO ELETTRICO

- Utilizzare dispositivi di protezione individuale (DPI) idonei e adottare misure di sicurezza adeguate per lavori elettrici. Vedere le normative NFPA 70E, CSA Z462, NOM 029-STPS o le norme equivalenti nel paese di installazione.
- Installazione e manutenzione di questa apparecchiatura si devono affidare solo ad elettricisti qualificati.
- Prima di lavorare con l'apparecchiatura o al suo interno isolare completamente l'alimentazione elettrica.
- Per verificare che l'alimentazione sia isolata usare sempre un rilevatore di tensione correttamente tarato.
- Sostituire dispositivi, sportelli e coperture prima di riaccendere l'alimentazione dell'apparecchiatura.
- Prestare attenzione a potenziali pericoli e ispezionare con attenzione l'area di lavoro per assicurarsi di non aver dimenticato utensili o altri oggetti all'interno dell'apparecchiatura.

Il mancato rispetto di queste istruzioni rovocherà morte o gravi infortuni.

RISCO DE ELECTROCUSSÃO, DE EXPLOSÃO, OU DE ARCO ELÉCTRICO

- Utilize equipamento de protecção pessoal (PPE) e siga os métodos de segurança eléctrica. Consulte NFPA 70E, CSA Z462, NOM 029-STPS ou o equivalente local.
- A instalação e manutenção deste equipamento só devem ser efectuadas por electricistas qualificados.
- Desligue todas as fontes de alimentação deste equipamento antes de trabalhar no equipamento ou no seu interior.
- Utilize sempre um dispositivo de detecção da tensão nominal adequada para confirmar se a alimentação está desligada.
- Substitua todos os dispositivos, portas e tampas antes de ligar a alimentação deste equipamento.
- Esteja atento a potenciais perigos e inspecione cuidadosamente a área de trabalho para se assegurar que não foram deixadas ferramentas e objectos no interior do equipamento.

A não observância destas instruções resultará em morte, ou ferimentos graves.

Опасность поражения электрическим током, взрыва или возникновения дуги

- Используйте подходящие средства индивидуальной защиты (СИЗ) и соблюдайте технику безопасности при электротехнических работах. См. NFPA 70E, CSA Z462, NOM 029-STPS или местный эквивалентный стандарт.
- Данное оборудование могут устанавливать и обслуживать только квалифицированные электрики.
- Отключите питание до начала работы снаружи или внутри оборудования.
- Всегда пользуйтесь надлежащим датчиком номинального напряжения для определения отсутствия питания.
- Установите обратно все устройства, дверцы и крышки перед включением питания данного оборудования.
- Избегайте потенциальных опасностей, внимательно осмотрите рабочую область на наличие инструментов и предметов, которые могли остаться внутри оборудования.

Несоблюдение этих инструкций приведет к смерти или серьезной травме.

电击、爆炸或弧闪的危险

- 采用适当的个人防护设备 (PPE) 并遵循电气作业安全守则。请参阅 NFPA 70E, CSA Z462, NOM 029-STPS 或当地对应的标准。
- 只有具备相应资质的电气人员才能安装和维修该设备。
- 在该设备表面或内部工作之前，请关闭设备的全部电源。
- 确保使用合适的额定电压传感器确认电源已关闭。
- 更换所有设备、门和盖，然后再打开该设备的电源。
- 注意潜在危险，仔细检查作业区，以免将工具和物件遗忘在设备内部。

不遵循上述说明将导致人员伤亡。

9.1 Put the Circuit Breaker in a Safe Position / Mettez le disjoncteur dans une position sûre / Deje el interruptor automático en una posición segura / Bewegen Sie den Leistungsschalter in eine sichere Position / Mettere l'interruttore in una posizione sicura / Coloque o disjuntor numa posição segura / Переведите автоматический выключатель в безопасное положение / 将断路器置于安全位置

en

1. Turn off all power supplying this equipment before working on or inside equipment.
2. Use a properly-rated voltage sensing device to confirm power is off.
3. Turn off or trip circuit breaker before installation.
   Make sure the circuit breaker is in the open (O) position and spring is discharged.
4. Disconnect circuit breaker and make sure the circuit breaker is in the disconnected position.

fr

1. Débranchez toutes les sources d'alimentation de cet équipement avant d'effectuer toute opération interne ou externe sur celui-ci.
2. Utilisez un dispositif de détection de tension ayant une valeur nominale appropriée pour vous assurer que l'alimentation est coupée.
3. Mettez le disjoncteur en position ouverte ou déclenchée avant l'installation. Assurez-vous que le disjoncteur est ouvert (O) et que le ressort est déchargé.
4. Débrochez le disjoncteur et assurez-vous que le disjoncteur est en position débroché.

es

1. Antes de trabajar con el equipo o en su interior, desactive la alimentación de este.
2. Utilice un dispositivo de detección de tensión de capacidad adecuada para confirmar la ausencia de alimentación eléctrica.
3. Desconecte o dispare el interruptor automático antes de la instalación. Asegúrese de que el interruptor automático se encuentre en la posición abierta (O) y que el resorte esté descargado.
4. Desconecte el interruptor automático y asegúrese de que se encuentre en posición desconectada.

de

1. Schalten Sie vor Arbeiten im oder am Gerät die Spannungszufuhr des Geräts vollständig aus.
2. Verwenden Sie ein Spannungsmessgerät mit geeigneter Bemessungsspannung, um sicherzustellen, dass keine Spannung mehr anliegt.
3. Schalten bzw. lösen Sie den Leistungsschalter vor der Installation aus. Stellen Sie sicher, dass sich der Leistungsschalter in der geöffneten Position (O) befindet und die Feder entspannt ist.
4. Trennen Sie den Leistungsschalter und stellen Sie sicher, dass der Leistungsschalter sich in der Trennstellung befindet.

it

1. Mettere fuori tensione questa apparecchiatura prima di intervenire sulla stessa o al suo interno.
2. Utilizzare un dispositivo di rilevamento di tensione di capacità adeguata per confermare l'assenza di alimentazione.
3. Spegnere o far scattare il sezionatore prima dell'installazione. Accertarsi che il sezionatore sia in posizione aperta (O) e che la molla d'innesco sia scarica.
4. Scollegare il sezionatore e assicurarsi che sia in posizione scollegato.

pt

1. Desligue toda a alimentação que fornece este equipamento antes de trabalhar no exterior ou interior do equipamento.
2. Utilize um dispositivo de detecção de tensão com um valor nominal adequado para confirmar se a alimentação está desligada.
3. Desligue ou ligue o disjuntor antes de efectuar a instalação.
   Certifique-se de que o disjuntor está na posição aberta (O) e que a mola está descarregada.
4. Desligue o disjuntor e certifique-se de que está na posição desligada.

ru

1. Перед выполнением работ на оборудовании или внутри него выключите все источники питания оборудования.
2. Используйте обладающий соответствующими характеристиками датчик напряжения для проверки отключения электропитания.
3. Перед началом монтажа выключите или отключите автоматический выключатель. Убедитесь, что автоматический выключатель находится в разомкнутом (O) положении и что пружина не взведена.
4. Отсоедините автоматический выключатель и убедитесь, что он находится в отсоединенном положении.

zh

1. 在此设备上或其内部 作业之前，请先关闭该设备的所有电源。
2. 使用适当的额定电压传感器确认电源 已关闭。
3. 进行安装之前，关闭或者使断路器跳 闸。 确保断路器处于开路 (O) 位置，且弹簧已放电。
4. 断开断路器，确保其处于断开置。

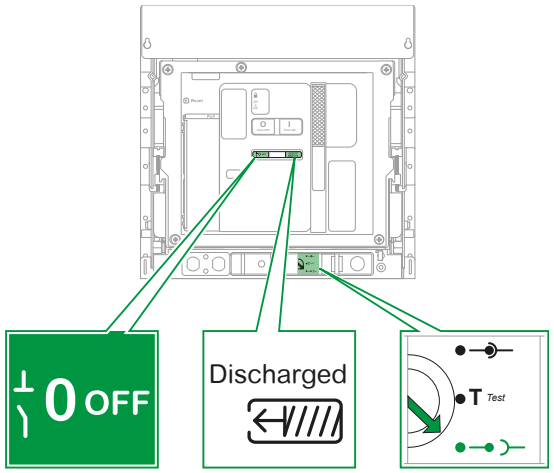

9.2 Remove Circuit Breaker from Chassis / Retirez le disjoncteur du châssis / Extraiga el interruptor automático del chasis / Entfernen Sie den Leistungsschalter von der Einschubkassette / Rimuovere l'interruttore dal telaio / Retire o disjuntor do chassis / Снимите автоматический выключатель с шасси / 从抽架中拆除断路器

⚠ DANGER / DANGER / PELIGRO / GEFAHR / PERICOLO / PERIGO / ОПАСНОСТЬ / 危险			
HAZARD OF DEVICE FALLING ● Be sure lifting equipment has lifting capacity for the device being lifted. ● Follow manufacturer's instructions for use of lifting equipment. ● Wear hard hat, safety shoes and heavy gloves. **Failure to follow these instructions will result in death or serious injury.**	**RISQUE DE CHUTE DE L'APPAREIL** ● Assurez-vous que l'appareil de levage a la capacité de levage pour l'appareil à soulever. ● Suivez les consignes du fabricant lors de l'utilisation de l'appareil de levage. ● Portez un casque de protection, des chaussures de sécurité et des gants épais. **Si ces directives ne sont pas respectées, cela entraînera la mort ou des blessures graves.**	**RIESGO DE CAÍDA DEL APARATO** ● Asegúrese de que el equipo de elevación tenga suficiente capacidad para la unidad que debe elevar. ● Para utilizar el equipo de elevación, siga las instrucciones del fabricante. ● Lleve puestos casco, calzado de seguridad y guantes pesados. **El incumplimiento de estas instrucciones provocará lesiones graves o incluso la muerte.**	**GEFAHR DES FALLENS DES GERÄTS** ● Vergewissern Sie sich, dass die Hebevorrichtung über ausreichende Tragfähigkeit zum Anheben des Geräts verfügt. ● Halten Sie sich beim Einsatz der Hebevorrichtung an die Anweisungen des Herstellers. ● Tragen Sie einen Schutzhelm, Sicherheitsschuhe und Schutzhandschuhe. **Die Nichtbeachtung dieser Anweisungen führt zu Tod oder schweren Verletzungen.**
PERICOLO DI CADUTA DEL DISPOSITIVO ● Assicurarsi che la macchina di sollevamento disponga di capacità di sollevamento adeguate per l'unità da sollevare. ● Rispettare le istruzioni del costruttore per l'uso della macchina di sollevamento. ● Indossare gli appositi indumenti di sicurezza quali il casco, le scarpe con puntale rigido e guanti per lavori pesanti. **Il mancato rispetto di queste istruzioni provocherà morte o gravi infortuni.**	**PERIGO DE QUEDA DO DISPOSITIVO** ● Certifique-se de que o equipamento de elevação tem capacidade para elevar a unidade. ● Siga as instruções do fabricante no que respeita à utilização de equipamento de elevação. ● Use um capacte, calçado de protecção e luvas pesadas. **A não observância destas instruções resultará em morte, ou ferimentos graves.**	**ОПАСНОСТЬ ПАДЕНИЯ УСТРОЙСТВА** ● Перед поднятием проверьте, что подъемное оборудование способно выдержать вес поднимаемого узла. ● Эксплуатацию подъемного оборудования осуществляйте согласно инструкциям изготовителя. ● При выполнении работ надевайте каску, защитную обувь и прочные рукавицы. **Несоблюдение этих инструкций приведет к смерти или серьезной травме.**	设备掉落风险 ● 确保起重设备具有符合该被举升装置的起重能力。 ● 使用起重设备时，遵循制造商的说明。 ● 穿戴安全帽、安全鞋和厚实手套。 不遵循上述说明将导致人员伤亡。

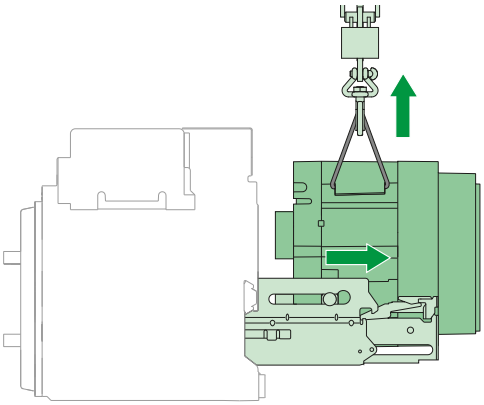

10 Secure Chassis / Fixation du châssis / Asegúrese de que el chasis está sujeto / Sichern der Einschubkassette / Fissare il telaio / Fixar o chassis / Фиксация шасси / 安全抽架

NOTICE / AVIS / AVISO / HINWEIS / AVVISO / AVISO / УВЕДОМЛЕНИЕ / 注意

HAZARD OF EQUIPMENT DAMAGE
- Do not lift device in the chassis.
- Chassis must be secured when installing or removing device.
- Distribute the weight of the device uniformly over a rigid mounting surface such as rails or a base plate.
- The mounting plane must be perfectly flat (tolerance on support flatness: 2 mm [0.08 in.]).

Failure to follow these instructions can result in equipment damage.

RISQUE DE DOMMAGES MATÉRIELS
- Déplacez l'appareil et son châssis séparément, ne déplacez pas l'appareil installé dans son châssis.
- Fixez le châssis avant d'installer ou d'enlever l'appareil.
- Répartissez le poids de l'appareil uniformément sur une suface rigide telle que des rails ou un socle.
- Le plan de fixation doit être d'une parfaite planéité (tolérance sur planéité : 2 mm (0.08 in.)).

Si ces directives ne sont pas respectées, cela peut entraîner des dommages matériels.

PELIGRO DE DAÑO AL EQUIPO
- No eleve el aparato en el chasis
- El chasis debe estar sujeto al instalar o extraer el aparato.
- Distribuya el peso del dispositivo uniformemente sobre una superficie de montaje rígida, como unos rieles o una placa base.
- El plano de montaje debe ser totalmente horizontal (tolerancia de planicidad para el montaje: 2 mm [0.08 in]).

El incumplimiento de estas instrucciones puede causar daño al equipo.

GEFAHR EINER BESCHÄDIGUNG DES GERÄTS
- Heben Sie das Gerät nicht in der Einschubkassette an.
- Die Einschubkassette muss bei Installation oder Entfernen des Geräts gesichert sein.
- Verteilen Sie das Gewicht des Geräts gleichmäßig auf einer stabilen Montagefläche z.B. auf Schienen oder einer Grundplatte.
- Die Montageebene muss vollkommen eben sein (Toleranz der Unterstützungsebenheit: 2 mm (0,08 in.)).

Die Nichtbeachtung dieser Anweisungen kann Sachschäden zur Folge haben.

PERICOLO DI DANNEGGIAMENTO DELL'APPARECCHIATURA
- Non sollevare il dispositivo nel telaio
- Il telaio deve essere fissato quando si installa o si rimuove il dispositivo.
- Distribuire il peso del dispositivo in modo uniforme su una superficie di montaggio rigida come guide o una piattaforma.
- Il piano di montaggio deve essere perfettamente livellato (tolleranza su supporto piano: 2 mm (0.08 in.)).

Il mancato rispetto di queste istruzioni può provocare danni alle apparecchiature.

RISCO DE DANOS NO EQUIPAMENTO
- Não levante o dispositivo fixado no chassis.
- Quando instalar ou remover o dispositivo, é necessário fixar o chassis.
- Distribua o peso do dispositivo de maneira uniforme numa superfície de montagem rígida como calhas ou uma placa de base.
- A superfície de montagem deve estar totalmente plana (tolerância da planura de apoio: 2 mm (0.08 in.)).

A não observância destas instruções pode provocar danos no equipamento.

ОПАСНОСТЬ ПОВРЕЖДЕНИЯ ОБОРУДОВАНИЯ
- Не поднимайте аппарат, установленный в шасси
- Во время установки или извлечения аппарата необходимо зафиксировать шасси.
- Равномерно распределите вес аппарата по жесткой монтажной поверхности, например салазкам или опорной плите.
- Монтажная поверхность должна быть идеально плоской (допустимое отклонение от плоскостности опор: 2 мм (0,08 дюйма)).

Несоблюдение этих инструкций может привести к повреждению оборудования.

可能有设备损坏的风险
- 请勿吊运抽架中的设备
- 安装或拆卸 设备时，必须固定抽架。
- 将设备重量 均匀分布在刚性安装表面上，例如轨道或基板上。
- 安装平面必须十分 平坦（支架平坦度公差：2 mm (0.08 in.)。

不遵循上述说明可能导致设备损坏。

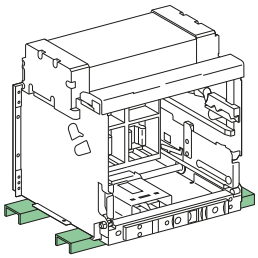

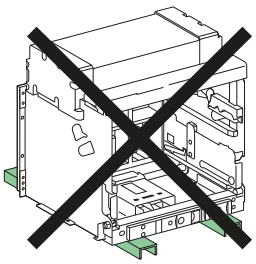

10.1 Masterpact MTZ2 3P/4P

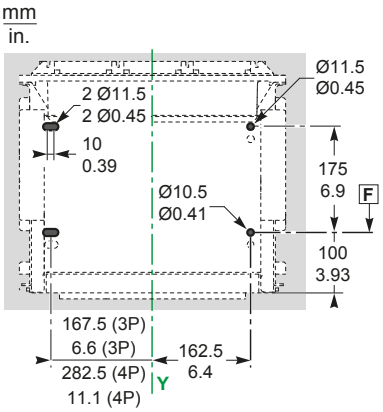

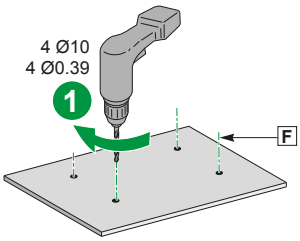

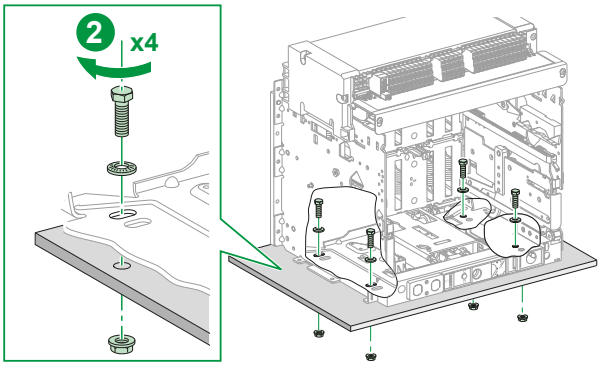

10.2 Masterpact MTZ3 3P/4P

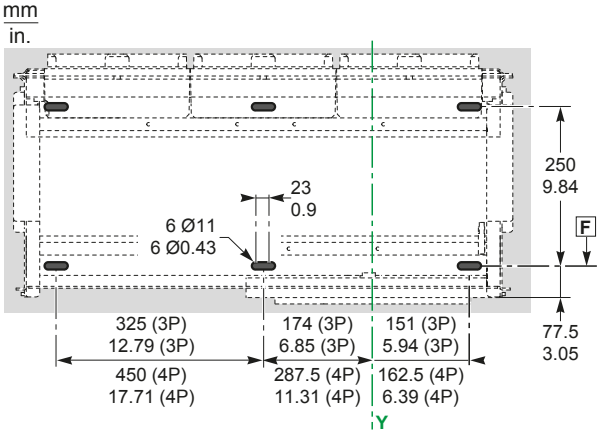

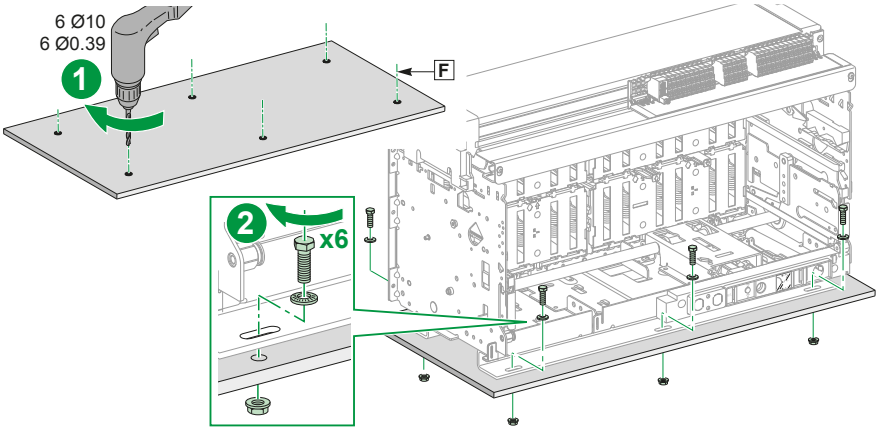

10.3 Earthing Chassis / Mise à la terre du châssis / Conexión a tierra del chasis / Erden der Einschubkassette / Collegamento a terra del telaio / Ligação do chassis à terra / Заземление шасси / 抽架接地

en If the mounting plane of the chassis is not connected to earth, you must connect the chassis to the earth protection circuit using a conductor with an appropriate section, in accordance with IEC 61439-1, section 10.5.2.

fr Si le plan de fixation du châssis n'est pas relié à la terre, il faut raccorder le châssis au circuit de protection (PE) par l'intermédiaire d'un câble de section approprié, en conformité au chapitre 10.5.2 de la norme IEC 61439-1.

es Si el plano de montaje del chasis no está conectado a tierra, debe conectar el chasis al circuito de protección a tierra mediante un conductor con la sección apropiada, según la norma IEC 61439-1, sección 10.5.2.

de Wenn die Montageebene der Einschubkassette nicht mit der Erde verbunden ist, müssen Sie die Einschubkassette gemäß IEC 61439-1, Abschnitt 10.5.2 mithilfe eines Leiters mit angemessenem Durchschnitt mit der Erdschlussschutzschaltung verbinden.

it Se il piano di montaggio del telaio non è collegato a terra, occorre collegare il telaio al circuito di protezione di terra mediante un conduttore di sezione appropriata, in conformità con IEC 61439-1, sezione 10.5.2.

pt Se a superfície de montagem do chassis não estiver ligada à terra, deve ligar o chassis ao circuito de proteção à terra utilizando um condutor com uma secção adequada, em conformidade com a IEC 61439-1, secção 10.5.2.

ru Если монтажная поверхность шасси не подключена к заземлению, необходимо подключить шасси к защитной цепи с помощью проводника с надлежащим сечением в соответствии с требованиями раздела 10.5.2. стандарта IEC 61439-1.

zh 如果抽架安装平面未接地，根据 IEC 61439-1 第 10.5.2 条，必须利用具有适当截面的导体将抽架连接到接地保护电路。

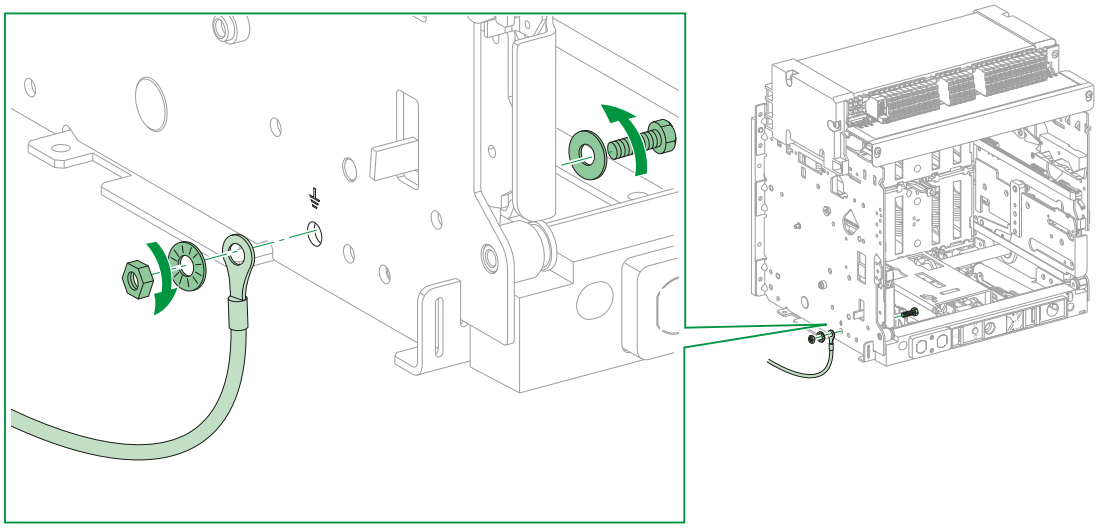

11 Locking in Disconnected, Connected and Test Positions / Verrouillage en position débroché, embroché et test / Enclavamiento en posiciones desenchufado, enchufado y test / Verriegelung in Trenn-, Betriebs- und Teststellungen / Blocco nelle posizioni estratta, inserita e test / Bloqueio em posição desligada, ligada e teste / Блокировка в отсоединенном, подсоединенном и испытательном положениях / 退出、连接和测试位置的锁定

en Without adaptation, the chassis can be locked in the disconnected position only. For locking the chassis in any position (connected, test, or disconnected position), a mechanical adaptation is required, as explained below.

fr Sans adaptation, le châssis ne peut être verrouillé qu'en position débrochée. Pour verrouiller le châssis dans n'importe quelle position (embrochée, test ou débrochée), une adaptation mécanique est nécessaire, comme indiqué ci-après.

es Sin adaptación, el chasis únicamente puede bloquearse en la posición desenchufado. Para bloquear el chasis en cualquier posición (enchufado, test o desenchufado), se requiere una adaptación mecánica, como se explica más abajo.

de Ohne Anpassung kann die Einschubkassette nur in der Trennstellung verriegelt werden. Zum Verriegeln der Einschubkassette in jeglicher Position (Betriebs-, Test- oder Trennstellung), ist eine mechanische Anpassung notwendig, wie unten beschrieben.

it Senza adattamento, il telaio può essere bloccato solo nella posizione estratta. Per bloccare il telaio in qualsiasi posizione (collegata, test o estratta), è richiesto un adattamento meccanico, come spiegato di seguito.

pt Sem adaptação, o chassis pode ser bloqueado apenas na posição desligada. Para bloquear o chassis em qualquer posição (conectado, teste ou posição desconectado), é necessário uma adaptação mecânica, como explicado abaixo.

ru Без настройки шасси можно фиксировать только в выкаченном положении. Чтобы заблокировать шасси в каком-либо положении (выкаченном, вкаченном или испытательном положении), необходимо выполнить механическую настройку в описанном далее порядке.

zh 若无适配件，抽架只能 锁定在退出 位置。为将抽架 锁定在任意位置（连接、测试或 退出位置），需要一个机械 适配件，如下文 所述。

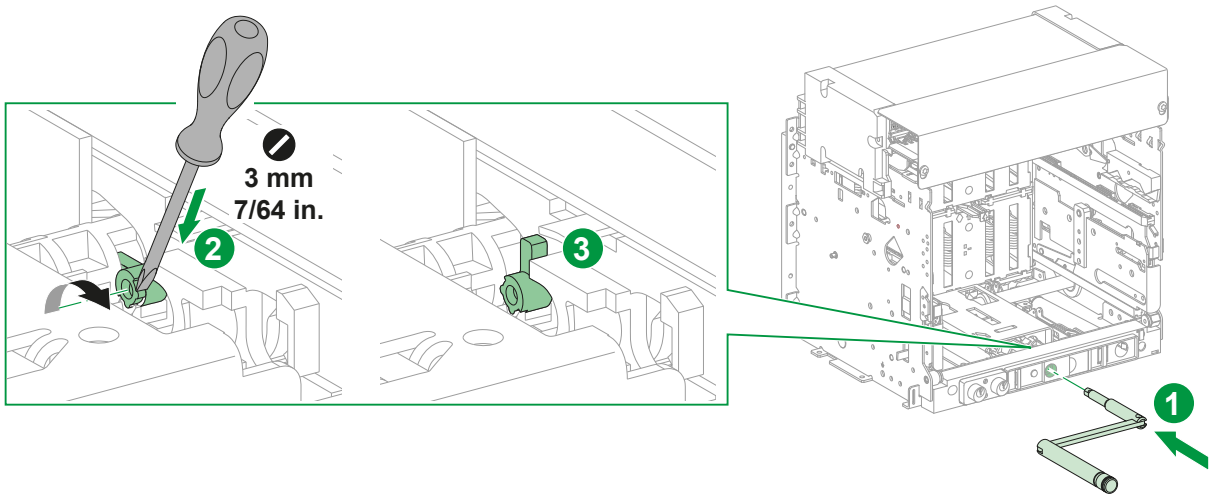

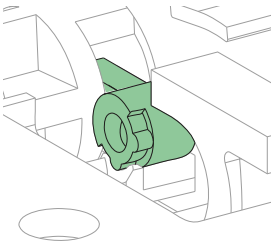

en Chassis locking in disconnected position
fr Verrouillage du châssis en position débroché
es Enclavamiento del chasis en posición desenchufado
de Verriegelung der Einschubkassette in Trennstellung
it Blocco telaio in posizione estratta
pt Bloqueio do chassis em posição desconectado
ru Блокировка шасси в выкаченном положении
zh 抽架锁位于退出位置

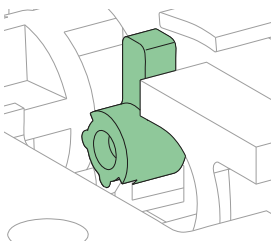

en Chassis locking in disconnected, connected or test position
fr Verrouillage du châssis en position débroché, embroché ou test
es Enclavamiento del chasis en posición desenchufado, enchufado o test
de Verriegelung der Einschubkassette in Trenn-, Betriebs- oder Teststellung
it Blocco telaio in posizione estratta, inserita o test
pt Bloqueio do chassis em posição desconectado, conectado ou posição de teste
ru Блокировка шасси в выкаченном, вкаченном или испытательном положении
zh 抽架锁位于退出、连接或测试位置

12 Installation Recommendations / Recommandations d'installation / Recomendaciones de instalación / Installationsempfehlungen / Consigli di installazione / Recomendações de instalação / Рекомендации по установке / 安装建议

12.1 Installation in Electrical Equipment / Installation dans un équipement électrique / Instalación en equipo eléctrico / Installation in einer elektrischen Anlage / Installazione in un'apparecchiatura elettrica / Instalação num equipamento elétrico / Подключение к электрооборудованию / 在电气设备中安装

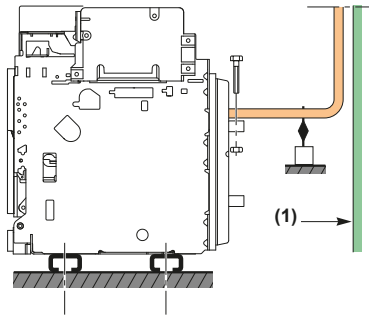

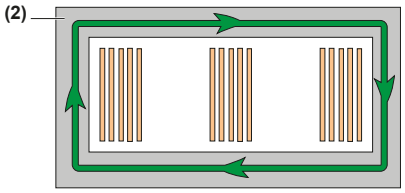

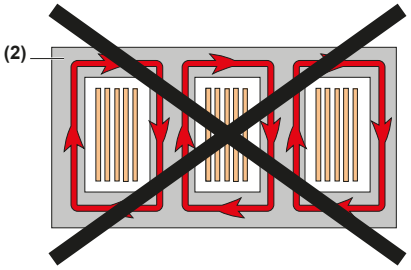

en Partitions
Sufficient openings must be provided in partitions to ensure good air circulation around the circuit breaker. Any partition between upstream and downstream connections of the device must be made of non-magnetic material.
For high currents, of 2500 A and above the metal supports or barriers in the immediate vicinity of a conductor must be made of non-magnetic material **(1)**. Metal barriers **(2)** through which a single conductor passes must not form a magnetic loop.

fr Cloisonnements
Des ouvertures suffisantes sont à aménager afin de permettre une bonne circulation de l'air autour du disjoncteur. Tout cloisonnement séparant les bornes amont et aval de l'appareil doit être réalisé en matériau amagnétique.
Pour les fortes intensités, à partir de 2500 A, les écrans ou supports métalliques situés au voisinage immédiat d'un conducteur sont à réaliser en matériau amagnétique **(1)**. Les écrans métalliques **(2)** traversés par un seul conducteur ne doivent pas former de boucle magnétique.

es Particiones
Deben practicarse aperturas suficientes en las particiones para asegurar una buena circulación del aire alrededor del interruptor automático. Todas las particiones entre conexiones aguas arriba y abajo del aparato deben estar fabricados con materiales no magnéticos.
Con corrientes elevadas de 2500 A y superiores, los soportes o barreras metálicos contiguos a un conductor deben estar fabricados con materiales no magnéticos **(1)**. Las barreras metálicas **(2)** atravesadas por un único conductor no deben formar un bucle magnético.

de Trennwände
Es sollten ausreichende Öffnungen in den Trennwänden zur Verfügung gestellt werden, um eine gute Luft zirkulation im Bereich des Leistungsschalter zu gewährleisten. Jede Trennwand zwischen vorgeschalteten und nachgeschalteten Verbindungen des Geräts muss aus nicht-magnetischem Material bestehen. Für hohe Ströme von 2500 A und höher müssen die Metallstützen oder -schranken in der unmittelbaren Nähe des Leiters aus nicht-magnetischem Material bestehen **(1)**. Metallschranken **(2)** durch die ein einzelner Leiter führt, dürfen keine Magnetschleifen bilden.

it Divisori
Disporre aperture sufficienti nei divisori per assicurare una buona circolazione dell'aria attorno all'interruttore. Qualsiasi divisorio tra le connessioni a monte e a valle del dispositivo deve essere di materiale non magnetico.
Per elevate correnti, di 2500 A e oltre, i supporti o le barriere di metallo nell'immediata prossimità di un conduttore devono essere in materiale non magnetico **(1)**. Le barriere metalliche **(2)** attraverso cui passa un singolo conduttore non devono formare un loop magnetico.

pt Partições
Devem ser fornecidas aberturas suficientes nas partições para assegurar uma boa circulação do ar à volta do disjuntor. Qualquer partição entre as ligações a montante e a jusante do dispositivo jusante do dispositivo devem ser compostas por material não magnético.
Para correntes elevadas, de 2 500 A e superiores os suportes ou barreiras metálicas próximos de um condutor devem ser compostos por um material não magnético **(1)**. As barreiras metálicas **(2)** através das quais passa um condutor não devem formar um laço magnético.

ru Разделительные пластины
Для обеспечения хорошей циркуляции воздуха вокруг автоматического выключателя в разделительных пластинах должны быть предусмотрены отверстия надлежащего размера.
Разделительные пластины, установленные между подключениями раньше и дальше по цепи, должны быть выполнены из немагнитного материала.
Для токов высокой силы от 2500 А металлические опоры или перегородки в непосредственной близости от проводника должны быть выполнены из немагнитного материала **(1)**.
Металлические перегородки **(2)**, через которые проходит одиночный проводник, не должны образовывать магнитный контур.

zh 隔断
隔断中必须有充足的开口 以确保断路器周围 的空气流通良好。 设备上游和下游连接之间的 隔断 必须采用非磁性 材料。
对于 2500 A 及 以上的高电流，导体附近的 金属支架或隔板 必须采用非磁性材料 **(1)**。 单根导体穿过金属隔板 **(2)** 时，不得形成 磁环。

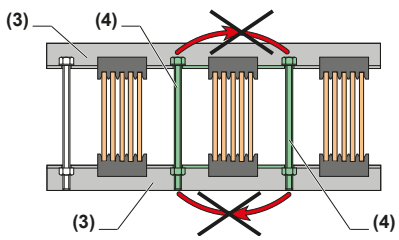

en Busbars
Do not create a magnetic loop around a conductor (with the busbar supports for example). To avoid this, either the supports **(3)** and/or the fixing screws **(4)** must be made of non-magnetic materials.

fr Barres
Ne créez pas de boucle magnétique autour d'un conducteur (avec des supports de barre, par exemple). Pour éviter ce phénomène, les supports **(3)** et/ou les vis de fixation **(4)** doivent être fabriqués en matériaux non magnétiques.

es Barras colectoras
No cree un bucle magnético alrededor de un conductor (mediante los soportes de la barra colectora,
por ejemplo). Para evitarlo, los soportes **(3)** o los tornillos de fijación **(4)** (o ambos) deben estar fabricados con materiales no magnéticos.

de Busbars
Erstellen Sie keine Magnetschleifen um einen Leiter herum (mit der Busbar-Halterung beispielsweise). Um dies zu vermeiden, müssen entweder die Halterungen **(3)** und/oder die Befestigungsschrauben **(4)** aus nicht-magnetischem Material bestehen.

it Barre del bus
Non creare un loop magnetico attorno a un conduttore (con i supporti della barra del bus ad esempio).
Per evitare ciò, i supporti **(3)** e/o le viti di fissaggio **(4)** devono essere di materiale non magnetico.

pt Barras condutoras
Não crie um laço magnético à volta de um condutor (com os suportes das barras condutoras, por exemplo).
Para evitar esta situação, os suportes **(3)** e/ou os parafusos de fixação **(4)** devem ser compostos por materiais não magnéticos.

ru Шины
Запрещено создавать магнитный контур вокруг проводника (например, с помощью опор для шин).
Чтобы не допускать этого, опоры **(3)** и (или) крепежные винты **(4)** должны быть изготовлены из немагнитных материалов.

zh 母线
请勿在导体周围 形成磁环（例如同母线支架一起）。为避免形成磁环，支架 **(3)** 和/或or定位螺钉 **(4)** 必须 由非金属材料制成。

12.2 Busbar Connections / Raccordement des barres / Conexiones de las barras colectoras / Verbindungen der Busbar / Connessioni barre del bus / Ligações das barras condutoras / Подсоединения к шинам / 母线连接

NOTICE / AVIS / AVISO / HINWEIS / AVVISO / AVISO / УВЕДОМЛЕНИЕ / 注意

HAZARD OF EQUIPMENT DAMAGE Do not exceed the maximum distance **(A)** between the first busbar support and the connection point of the device. **Failure to follow these instructions can result in equipment damage.**	**RISQUE DE DOMMAGES MATÉRIELS** Ne dépassez pas la distance maximum **(A)** entre le premier entretoisement des barres et le point de raccordement de l'appareil. **Si ces directives ne sont pas respectées, cela peut entraîner des dommages matériels.**	**PELIGRO DE DAÑO AL EQUIPO** No supere la distancia máxima **(A)** entre el soporte de la primera barra colectora y el punto de conexión del aparato. **El incumplimiento de estas instrucciones puede causar daño al equipo.**	**GEFAHR EINER BESCHÄDIGUNG DES GERÄTS** Überschreiten Sie den Maximalabstand **(A)** zwischen der ersten Busbar-Halterung und dem Verbindungspunkt des Geräts nicht. **Die Nichtbeachtung dieser Anweisungen kann Sachschäden zur Folge haben.**
PERICOLO DI DANNEGGIAMENTO DELL'APPARECCHIATURA Non superare la distanza massima **(A)** tra il primo supporto della barra del bus e il punto di connessione del dispositivo. **Il mancato rispetto di queste istruzioni può provocare danni alle apparecchiature.**	**RISCO DE DANOS NO EQUIPAMENTO** Não exceda a distância máxima **(A)** entre o primeiro suporte das barras condutoras e o ponto de ligação do dispositivo. **A não observância destas instruções pode provocar danos no equipamento.**	**ОПАСНОСТЬ ПОВРЕЖДЕНИЯ ОБОРУДОВАНИЯ** Не превышайте максимальное расстояние **(A)** между первой опорой для шин и точкой подключения аппарата. **Несоблюдение этих инструкций может привести к повреждению оборудования.**	可能有设备损坏的风险 请勿超过第一母线支架与设备连接点之间的最大距离 **(A)**。 不遵循上述说明可能导致设备损坏。

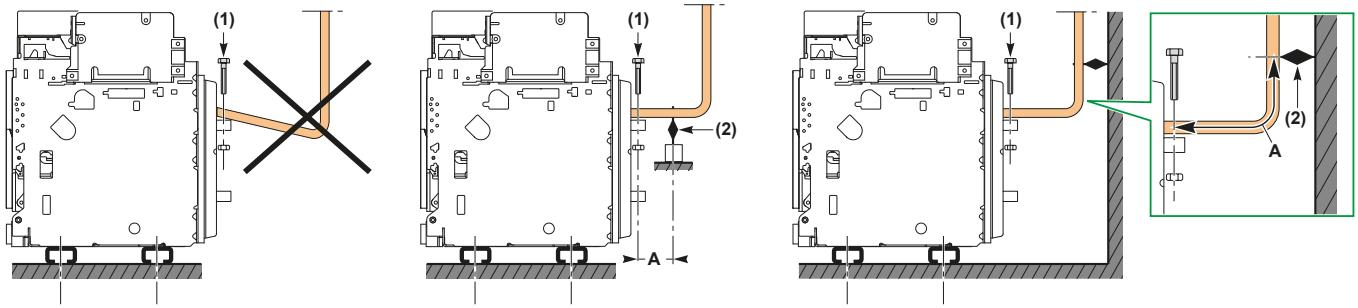

en Maximum distance **(A)** between the circuit breaker power terminal and the first busbar support

fr Distance maximale **(A)** entre la borne du disjoncteur et le premier support de barre

es Distancia máxima **(A)** entre el terminal de alimentación del interruptor automático y el soporte de la primera barra colectora

de Maximalabstand **(A)** zwischen dem Anschlussblock des Leistungsschalter und der ersten Busbar-Halterung

it Distanza massima **(A)** tra il terminale di alimentazione dell'interruttore e il primo supporto della barra del bus

pt Distância máxima **(A)** entre o terminal de alimentação do disjuntor e o primeiro suporte das barras condutoras

ru Максимальное расстояние **(A)** между клеммой питания автоматического выключателя и первой опорой для шины

zh 断路器电源端子与第一母线支架之间的最大距离 **(A)**

Isc (kA)	30	50	65	80	100	150
A	350 mm	300 mm	250 mm	150 mm	150 mm	150 mm
	13.77 in.	11.81 in.	9.84 in.	5.9 in.	5.9 in.	5.9 in.

en **Busbars connections**

- The busbars must be suitably adjusted to ensure that the connection points are positioned on the power terminals before the bolts **(1)** are inserted.
- The weight of the busbars must be supported by busbar supports **(2)** that are solidly fixed to the switchboard framework and not by the circuit breaker power terminals
- The first busbar support must be situated within a maximum distance **(A)** from the power terminal of the circuit breaker. This distance must be respected so that the busbar can withstand the electrodynamic stresses between phases in the event of a short circuit.The table below gives the maximum distance **(A)** depending on the prospective short-circuit current Isc.

fr **Raccordement des barres**

- Les barres doivent être correctement ajustées pour que les points de raccordement soient positionnés sur les bornes d'alimentation avant la mise en place les boulons **(1)**.
- Le poids des barres doit être soutenu par des supports **(2)** solidement fixés au châssis du tableau électrique et non par les bornes du disjoncteur.
- Le premier support de barre doit être situé à une distance maximale **(A)** de la borne du disjoncteur. Cette distance doit être respectée pour que la barre résiste aux contraintes électrodynamiques entre les phases en cas de court-circuit.

Le tableau ci-dessous indique la distance maximale **(A)** selon le courant de court-circuit présumé (Isc).

es **Conexiones para barras**

- Las barras colectoras deben ajustarse adecuadamente para garantizar que los puntos de conexión están colocados en los terminales de alimentación antes de insertar los pernos **(1)**
- El peso de las barras colectoras debe recaer en los soportes de barras colectoras **(2)**, fijados firmemente a la estructura del panel de conmutación, y no en los terminales de alimentación de los interruptores automáticos.
- El soporte de la primera barra colectora debe estar situado dentro de una distancia máxima **(A)** del terminal de alimentación del interruptor automático. Esta distancia debe respetarse de modo que la barra colectora pueda aguantar la tensión electrodinámica entre fases en caso de cortocircuito. La tabla siguiente muestra la distancia máxima **(A)** en función del Isc de corriente de línea previsible.

de **Verbindungen der Busbar**

- Die Busbars müssen angemessen angepasst sein, um sicherzustellen, dass die Verbindungspunkte auf den Anschlussblöcken positioniert sind, bevor die Schrauben **(1)** eingesetzt werden.
- Das Gewicht der Busbars muss von den Busbar-Halterungen **(2)** gehalten werden, die fest am Schaltschrankgehäuse angebracht sind, und darf nicht auf den Anschlussblöcken des Leistungsschalter lasten.
- Die erste Busbar-Halterung muss mit einem Maximalabstand **(A)** vom Anschlussblock des Leistungsschalter angebracht sein. Dieser Abstand muss eingehalten werden, damit der Busbar ausreichend gegen die elektrodynamischen Belastungen zwischen den Phasen geschützt ist, falls ein Kurzschluss auftritt.

Die folgende Tabelle gibt den Maximalabstand **(A)** an,abhängig von dem erwartbaren Kurzschlussstrom Isc.

it **Connessioni barra del bus**

- Le barre del bus devono essere regolate adeguatamente per garantire che i punti di connessione siano posizionati sui terminali di alimentazione prima di inserire i bulloni **(1)**
- Il peso delle barre del bus deve essere supportato dai relativi supporti **(2)** fissati solidamente alla struttura del quadro e non dai terminali di alimentazione dell'interruttore
- Il primo supporto della barra del bus deve essere posto entro una distanza minima **(A)** dal terminale di alimentazione dell'interruttore. Rispettare la distanza in modo che la barra del bus possa sostenere gli stress elettrodinamici tra le fasi nel caso di un corto circuito. La tabella di seguito indica la distanza massima **(A)** in base alla corrente di corto circuito prevista Isc.

pt **Ligações das barras condutoras**

- As barras condutoras devem ser ajustadas de maneira adequada para garantir que os pontos de ligação estão posicionados nos terminais de alimentação antes dos parafusos **(1)** serem inseridos
- O peso das barras condutoras deve ser suportado por suportes de barras de condutoras **(2)** que estejam fixadas com firmeza no quadro de alimentação e não pelos terminais de alimentação do disjuntor
- O primeiro suporte das barras condutoras deve estar situado a uma distância máxima **(A)** do terminal de alimentação do disjuntor. Esta distância deve ser respeitada para que a barra condutora possa suportar o esforço eletrodinâmico entre as fases na eventualidade de um curto-circuito.

A tabela abaixo indica a distância máxima **(A)** dependendo do potencial Isc de corrente do curto-circuito.

ru **Подсоединения к шинам**

- Шины должны быть надлежащим образом отрегулированы, чтобы точки подключения были установлены на клеммах питания до того, как будут вставлены болты **(1)**
- Вес шин должен поддерживаться опорами для шин **(2)**, которые должны быть прочно прикреплены к раме распределительного щита, а не к клеммам питания автоматического выключателя
- Первая опора для шины должна быть расположена на максимальном расстоянии **(A)** от клеммы питания автоматического выключателя. Это расстояние необходимо для того, чтобы шина могла выдерживать электродинамические нагрузки между фазами в случае короткого замыкания. В приведенной ниже таблице отражена зависимость максимального расстояния **(A)** от ожидаемого тока короткого замыкания Isc.

zh 母线连接

- 必须适当调节母线，确保连接点 位于电源 端子上方，然后插入螺栓 **(1)**
- 母线重量必须 由母线支架 **(2)** 支撑，母线支架牢牢固定在 配电盘框架上，而不是由断路器 电源端子固定
- 第一母线支架与断路器电源端子 的距离必须在最大距离 **(A)** 范围 内。

必须遵守该距离 要求，使得在短路时，母线
能够耐受 各相之间的电动 应力。下表给出了 不同预期短路电流 Isc 对应的最大 距离 **(A)**。

12.3 Cable Connections / Raccordement des câbles / Conexiones de cables / Kabelverbindungen / Connessioni dei cavi / Ligações dos cabos / Кабельные соединения / 电缆连接

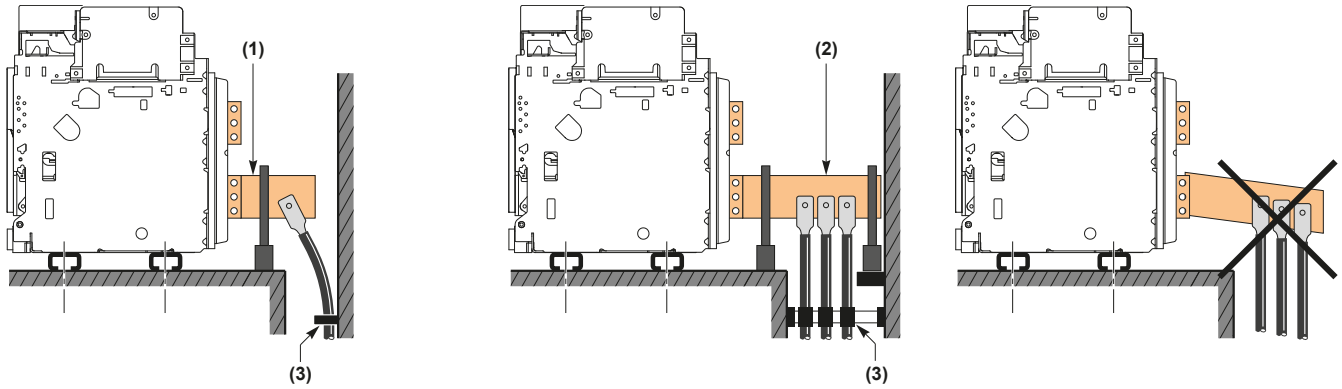

en **Cable connections**

If cables are used for the power connections, make sure that their weight is not supported by the circuit breaker power terminals, but is supported by the panel structure.
For this, make the connections as follows:
- Extend the device terminals using short bars designed and installed following the recommendations for bar-type power connections:
- For a single cable, use solution **(1)** above
- For multiple cables, use solution **(2)** above.
- In all cases, follow the general rules for connections to busbars:
- Position the cable lugs before inserting the bolts
- Secure the cables firmly to the framework **(3)**.

fr **Raccordement des câbles**

Si des câbles sont utilisés pour les raccordements d'alimentation, vérifiez que leur poids n'est pas supporté par les bornes du disjoncteur mais par la structure du tableau. Pour cela, établissez les raccordements comme suit :
- Prolongez les bornes de l'appareil à l'aide de barres courtes conçues et installées selon les recommandations pour les raccordements d'alimentation par barre :
- Avec un câble unique, utilisez la solution **(1)** ci-dessus.
- Avec plusieurs câbles, utilisez la solution **(2)** ci-dessus.
- Dans tous les cas, respectez les règles générales de raccordement aux barres :
- Placez les cosses de câble avant les boulons.
- Fixez les câbles solidement au châssis **(3)**.

es **Conexiones de cables**

Si se usan cables para las conexiones de alimentación, asegúrese de que su peso no esté soportado por los terminales de alimentación del interruptor automático, sino por la estructura del panel. Para ello, realice las conexiones del modo siguiente:
- Amplíe los terminales del aparato mediante barras cortas diseñadas e instaladas siguiendo las recomendaciones de las conexiones de alimentación de barra:
- Sisólo hay un cable, use la solución **(1)** anterior
- Sihay varios cables, use la solución **(2)** anterior.
- En todos los casos, siga las reglas generales de conexiones a barras colectoras:
- Coloque los terminales de cable antes de insertar los pernos
- Fije los cables firmemente a la estructura **(3)**.

de **Kabelverbindungen**

Wenn für die Stromverbindungen Kabel verwendet werden, muss sichergestellt werden, dass ihr Gewicht nicht auf den Anschlussblücken des Leistungsschalter lastet, sondern von der Panel-Struktur getragen wird. Um dies zu gewährleisten müssen die Verbindungen wie folgt erstellt werden:
- Erweitern Sie die Geräteklemmleisten mit kurzen Bars, die gemäß den Empfehlungen für Stromverbindungen des Bar-Typs entworfen und installiert wurden:
- Für ein einfaches Kabel, verwenden Sie Lösung **(1)** oben.
- Für mehrere Kabel, verwenden Sie Lösung **(2)** oben.
- Folgen Sie in allen Fällen den allgemeinen Bestimmungen für Verbindungen zu Busbars:
- Positionieren Sie die Klemmenadapter, bevor Sie die Schrauben einsetzen
- Sichern Sie die Kabel fest am Gehäuse **(3)**.

it **Connessioni dei cavi**

Se si utilizzano cavi per le connessioni di alimentazione, verificare che il loro peso non sia sostenuto dai terminali di alimentazione dell'interruttore, ma dalla struttura del pannello. Per questo, eseguire le connessioni come segue:
- Estendere i terminali del dispositivo tramite corte barre designate e installate seguendo le raccomandazioni per le connessioni di alimentazione di tipo a barra:
- Per un cavo singolo, utilizzare la soluzione **(1)** sopra
- Per più cavi, utilizzare la soluzione **(2)** sopra.
- In tutti i casi, seguire le regole generali per le connessioni alle barre del bus:
- Posizionare i capocorda dei cavi prima di inserire i bulloni
- Fissare i cavi al telaio **(3)**.

pt **Ligações dos cabos**

Se os cabos forem utilizados para as ligações de alimentação, certifique-se de que o peso não é suportado pelos terminais de alimentação do disjuntor, mas sim pela estrutura do painel. Para tal, efetue as ligações do seguinte modo:
- Extenda os terminais do dispositivo utilizando barras curtas concebidas e instaladas de acordoas recomendações para as ligações de alimentação do tipo barra:
- Para um único cabo, utilize a solução **(1)** indicada acima
- Para vários cabos, utilize a solução **(2)** indicada acima.
- Em todos os casos, siga as seguintes regras para a ligação das barras condutoras:
- Posicioneos terminais de condutor antes de inserir os parafusos
- Fixe os cabos com firmeza na estrutura **(3)**.

ru **Кабельные соединения**

Если для подключения питания используются кабели, они должны опираться не на клеммы питания автоматического выключателя, а на панельную конструкцию. Для этого следует выполнять подключения, как описано далее.
- Удлините клеммы аппарата с помощью коротких пластин, разработанных и установленных в соответствии с рекомендациями для подключения питания с использованием шин:
- для одного кабеля следует использовать решение **(1)**
- для нескольких кабелей следует использовать решение **(2)**
- Во всех случаях необходимо следовать общим правилам выполнения подключений к шинам:
- сначала устанавливайте кабельные наконечники, а затем — болты;
- надежно прикрепляйте кабели к раме **(3)**.

zh **电缆连接**

如果使用电缆来连接 电源，应确保其重量 不是由断路器电源 端子支撑，而是由面板结构支撑。 对此，应按如下方式进行 连接：
- 使用短条延长设备端子， 短条 根据条形电源连接 建议进行设计和安装：
- 对于单根电缆，使用上面的解决方案 **(1)**
- 对于多根电缆，使用上面的解决方案 **(2)**
- 所有情况下都应遵循关于连接母线的一般规则：
- 先放好电缆接线头，再 插入螺栓
- 将电缆牢牢固定到框架 **(3)** 上。

13 Power Terminals / Raccordements de puissance / Bornes de potencia / Anschlussblöcke / Terminali di alimentazione / Terminais de alimentação / Клеммы питания / 电源端子

⚠ WARNING / AVERTISSEMENT / ADVERTENCIA / WARNUNG / AVVERTIMENTO / ATENÇÃO / ПРЕДУПРЕЖДЕНИЕ / 警告

HAZARD OF FIRE
- Do not fit aluminum (Al) connectors in place of the copper (Cu) connectors.
- Do not fit connectors of a lower rating than the rating of the device.

Failure to follow these instructions can result in death, serious injury, or equipment damage.

RISQUE D'INCENDIE
- Ne montez pas de connecteurs en Aluminium (Al) à la place des connecteursen Cuivre (Cu).
- Ne montez pas de connecteurs de calibre inférieur au calibre de l'appareil.

Si ces directives ne sont pas respectées, cela peut entraîner la mort ou des blessures graves ou des dommages matériels.

PELIGRO DE INCENDIO
- No utilice conectores de aluminio (Al) en lugar de conectores de cobre (Cu).
- No instale conectores de un calibre inferior al del aparato.

El incumplimiento de estas instrucciones puede causar la muerte, lesiones serias o daño al equipo.

BRANDGEFAHR
- Ersetzen Sie keine Kupferanschlüsse (Cu) durch Aluminiumanschlüsse (Al).
- Bringen Sie keine Anschlüsse mit einer niedrigeren Bemessungskapazität als derjenigen des Geräts an.

Die Nichtbeachtung dieser Anweisungen kann Tod, schwere Verletzungen oder Sachschäden zur Folge haben.

PERICOLO DI INCENDIO
- Non usare connettori in alluminio (Al) al posto di quelli in rame (Cu).
- Non utilizzare connettori con valori nominali inferiori a quelli del dispositivo.

Il mancato rispetto di queste istruzioni può provocare morte, gravi infortuni o danni alle apparecchiature.

PERIGO DE INCÊNDIO
- Não utilize conetores de alumínio (Al) em vez de conetores de cobre (Cu).
- Não encaixe conectores com uma corrente mais baixa que a do dispositivo.

A não observância destas instruções pode provocar a morte, ferimentos graves, ou danos no equipamento.

УГРОЗА ВОЗГОРАНИЯ
- Не устанавливайте алюминиевые (Al) соединительные элементы вместо медных (Cu) соединительных элементов.
- Не подсоединяйте разъемы более низкого номинала, чем номинал аппарата.

Несоблюдение этих инструкций может привести к смерти, серьезной травме или повреждению оборудования.

火灾危险
- 不适合将铝接线端子替代铜接线端子。
- 所安装的连接器的额定规格不得低于设备的额定规格

不遵循上述说明可能导致人员伤亡或设备损坏。

		800 A	1600 A	2000 A	2500 A 3200 A	4000 A	5000 A 6300 A
	NA	Al	Al				
	N1	Al	Al	Al			
	H1, HA	Al	Al	Al	Cu	Cu	Cu
	H2, HF	Al	Al	Al	Cu	Cu	Cu
	H3			Cu	Cu	Cu	
	H10, HA10	Al	Al	Al	Cu	Cu	
	L1	Al	Al	Cu			

		800 A	1600 A	2000 A	2500 A 3200 A	4000 A	5000 A 6300 A
	NA	Al	Al				
	N1	Al	Al	Cu			
	H1, HA	Al	Al	Cu	Cu		
	H2, HF	Al	Al	Cu	Cu		
	H3			Cu	Cu		
	L1	Al	Al	Cu			

13.1 MTZ2 800–3200 A: Front Connectors / Prises avant / Conectores anteriores / Vorderseitige Anschlüsse / Attacchi frontali / Conetores dianteiros / Передние соединительные элементы / 前端子

800–1600 A (Al)	
LV847960SP (3P)	LV847961SP (4P)
x3	x4
x12	x16

2000–3200 A (Cu)	
LV847962SP (3P)	LV847963SP (4P)
x3	x4
x12	x16

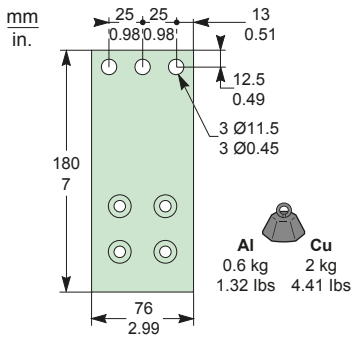

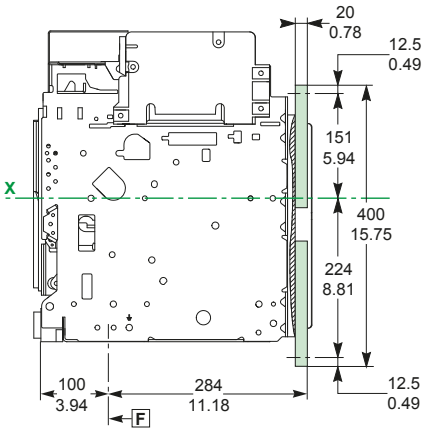

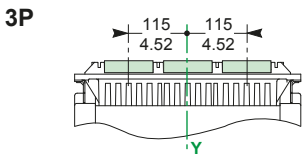

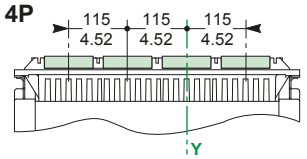

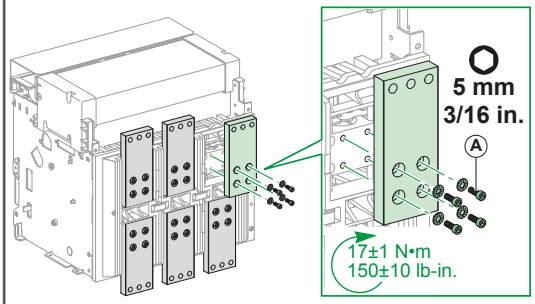

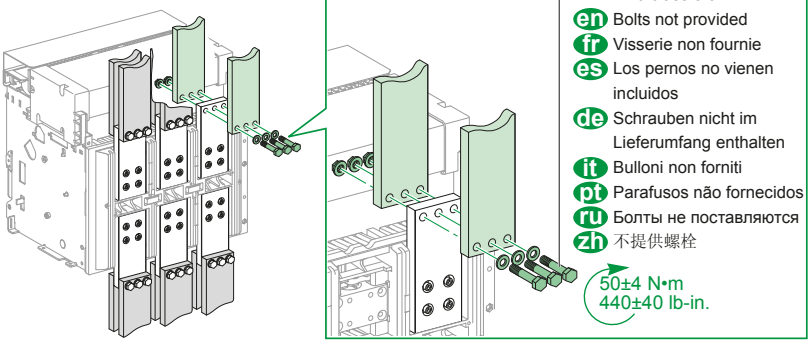

13.2 Rear Connectors, Horizontal / Prises arrières horizontales / Conectores posteriores planos / Rückseitige Anschlüsse, horizontal / Attacchi posteriori, orizzontali / Conetores traseiros, horizontal / Задние соединительные элементы, горизонтальные / 后端子，水平

800–2000 A (Al)	
LV847964SP (3P)	LV847965SP (4P)
x3 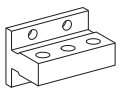 x12 	x4 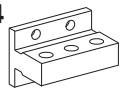 x16 

2000–3200 A (Cu)	
LV847966SP (3P)	LV847967SP (4P)
x3 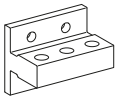 x12 	x4 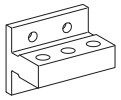 x16 

mm
in.

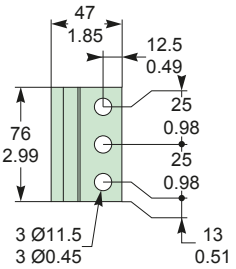

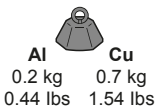

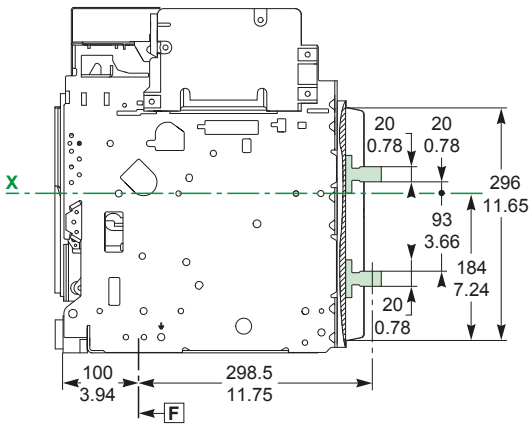

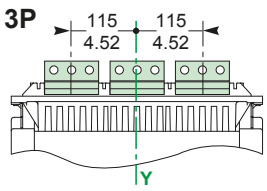

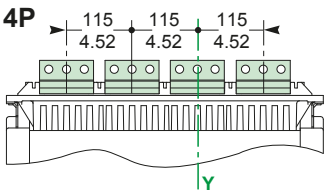

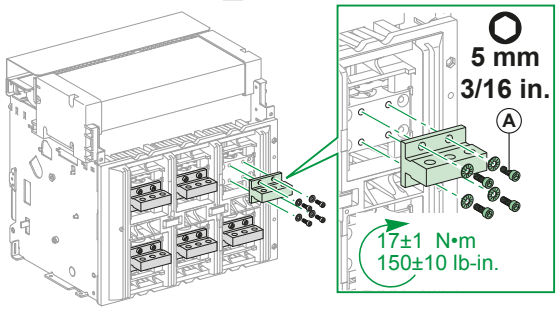

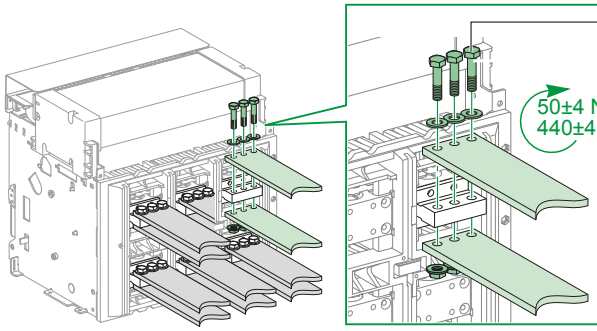

M10 class 8.8
- en Bolts not provided
- fr Visserie non fournie
- es Los pernos no vienen incluidos
- de Schrauben nicht im Lieferumfang enthalten
- it Bulloni non forniti
- pt Parafusos não fornecidos
- ru Болты не поставляются
- zh 不提供螺栓

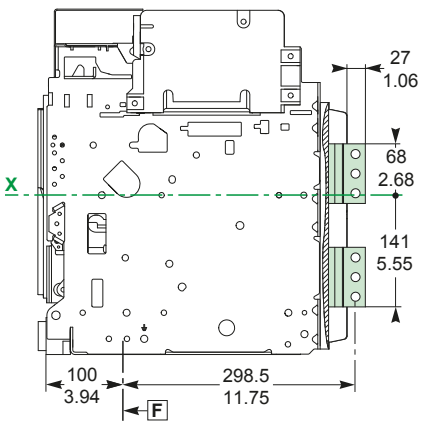

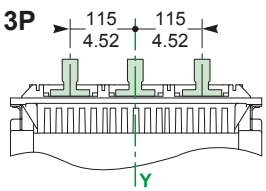

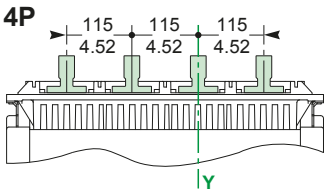

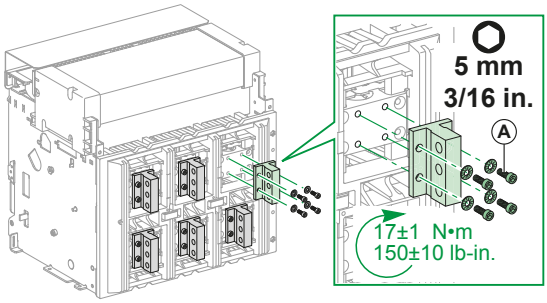

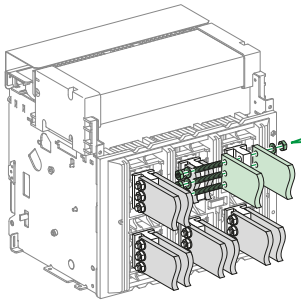

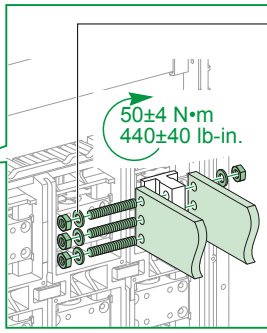

M10 class 8.8
- en Bolts not provided
- fr Visserie non fournie
- es Los pernos no vienen incluidos
- de Schrauben nicht im Lieferumfang enthalten
- it Bulloni non forniti
- pt Parafusos não fornecidos
- ru Болты не поставляются
- zh 不提供螺栓

13.3 Rear Connectors, Horizontal / Prises arrières horizontales / Conectores posteriores planos / Rückseitige Anschlüsse, horizontal / Attacchi posteriori, orizzontali / Conetores traseiros, horizontal / Задние соединительные элементы, горизонтальные / 后端子，水平

LV847970SP (3P)	LV847971SP (4P)
x2 x1 x12	x2 x2 x16

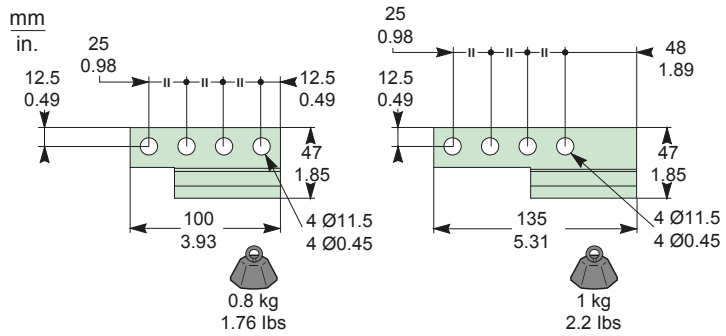

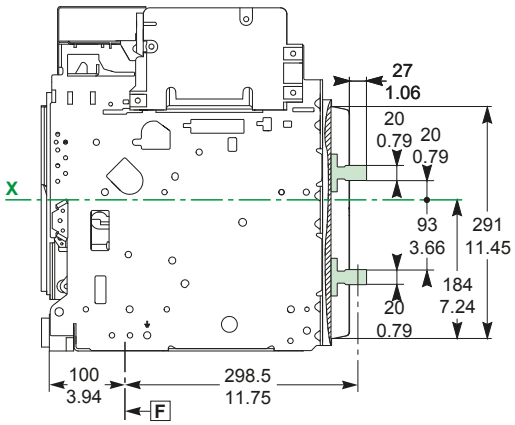

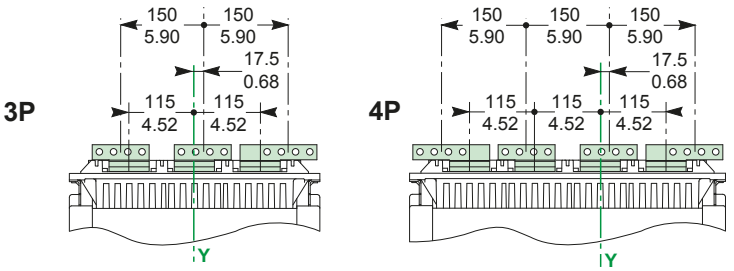

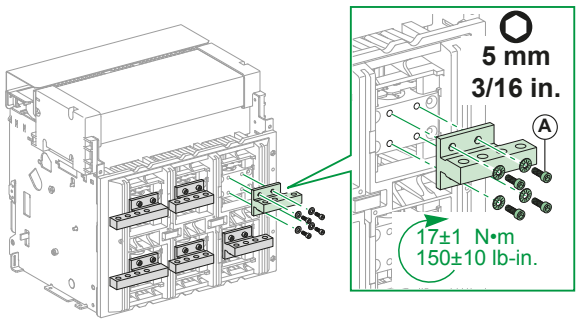

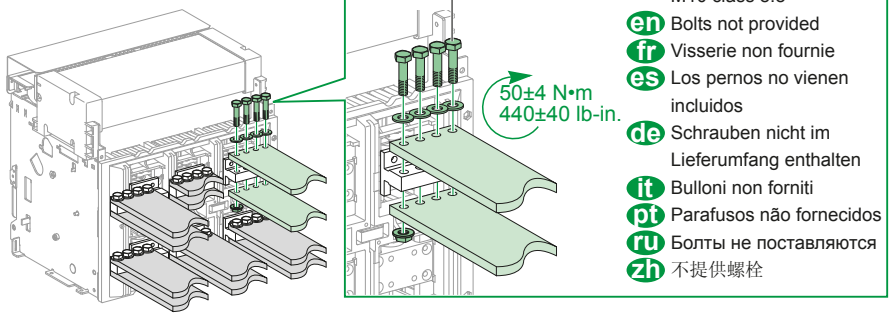

13.4 MTZ2 4000 A: Rear Connectors, Vertical / Prises arrières verticales / Conectores posteriores de canto / Rückseitige Anschlüsse, vertikal / Attacchi posteriori, verticali / Conetores traseiros, vertical / Задние соединительные элементы, вертикальные / 后端子，垂直

LV847968SP (3P)	LV847969SP (4P)
x3 x12	x4 x16

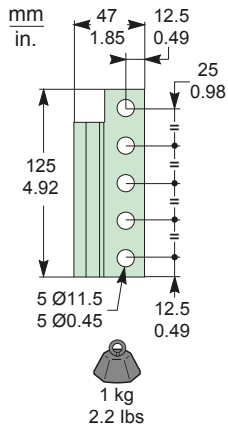

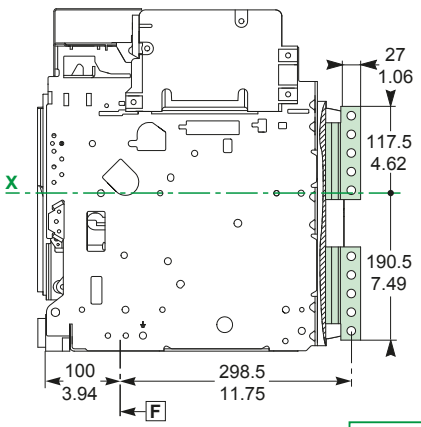

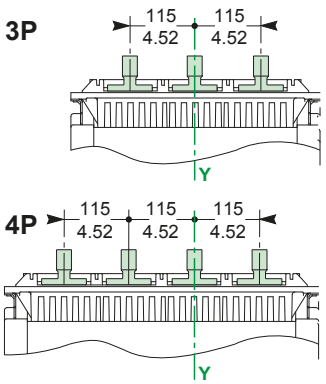

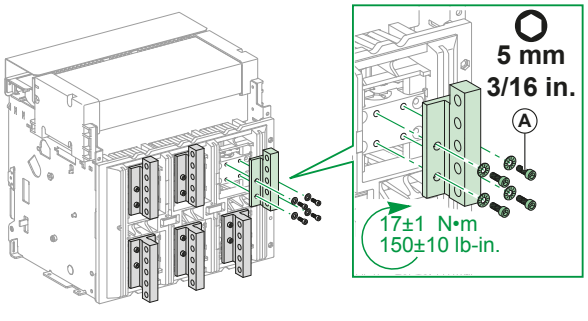

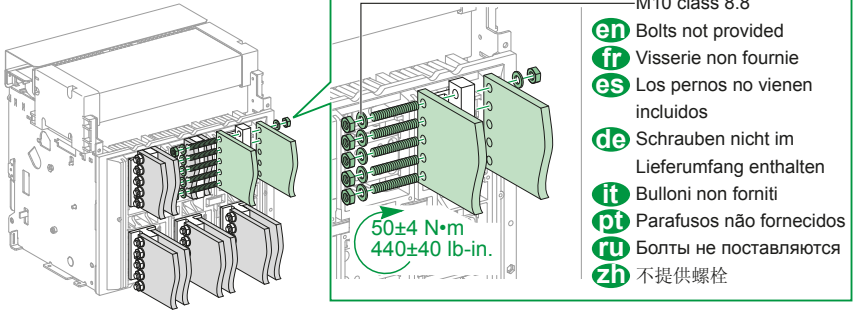

13.5 Rear Connectors, Horizontal and Vertical / Prises arrières horizontales ou verticales / Conectores posteriores, planos y de canto / Rückseitige Anschlüsse, horizontal und vertikal / Attacchi posteriori, orizzontali e verticali / Conetores traseiros, horizontal e vertical / Задние соединительные элементы, горизонтальные и вертикальные / 后端子，水平和垂直

LV847966SP (3P) x2	LV847967SP (4P) x2
x3 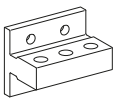	x4 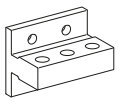
x12 	x16 

mm
in.

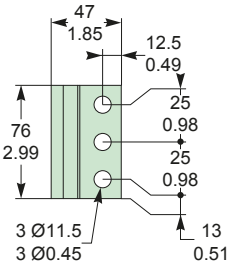


0.7 kg
1.54 lbs

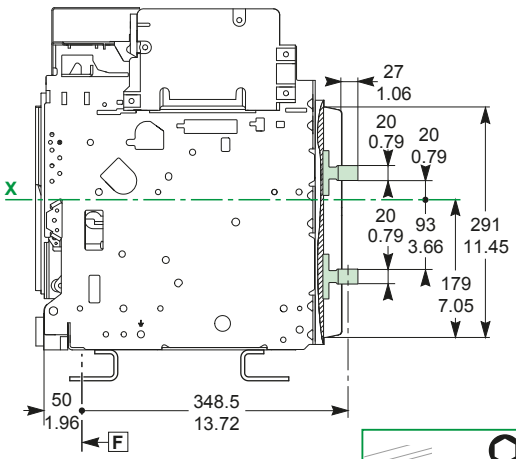

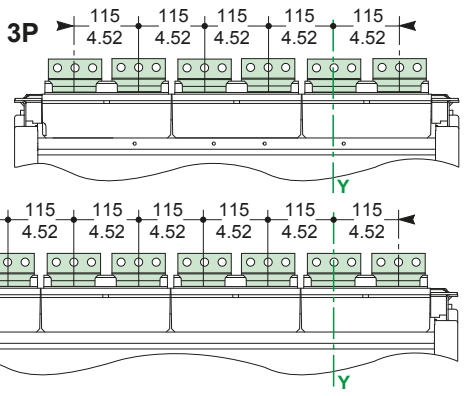

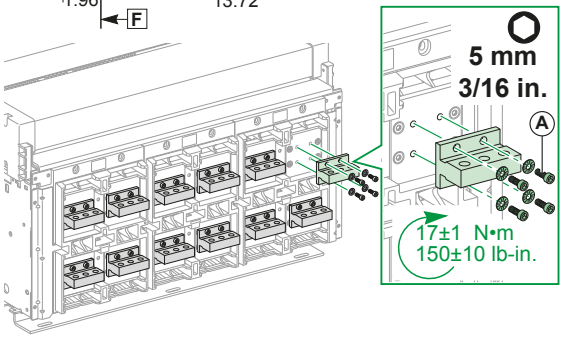

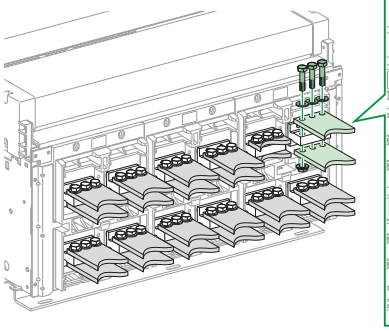

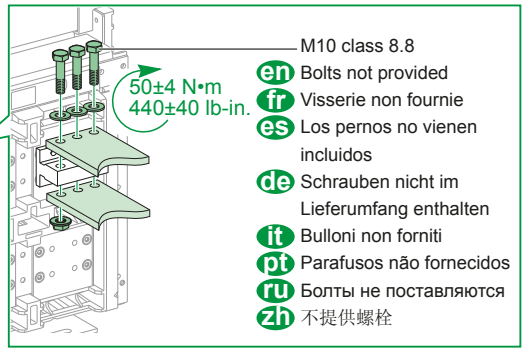

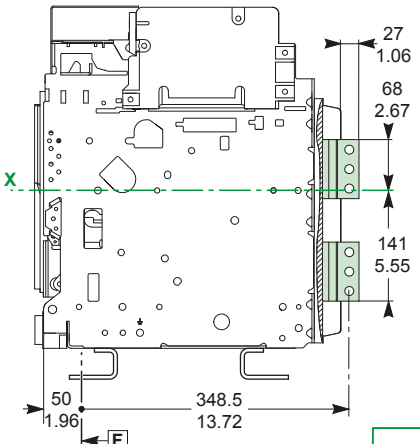

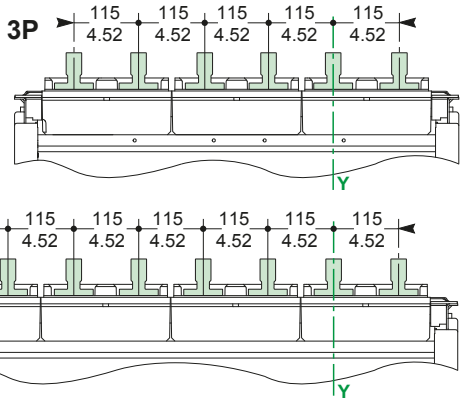

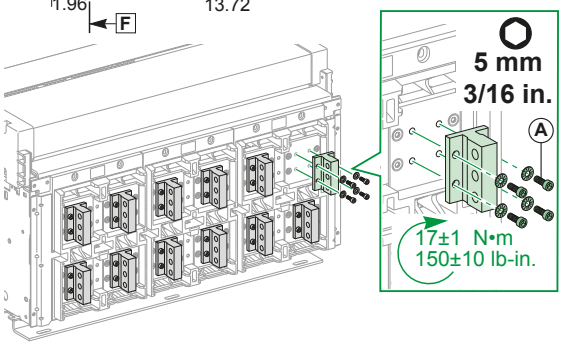

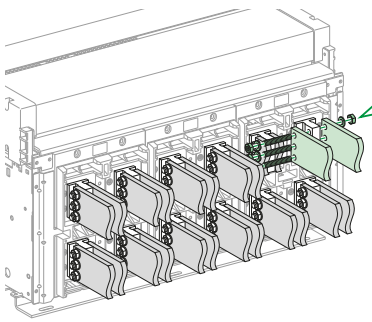

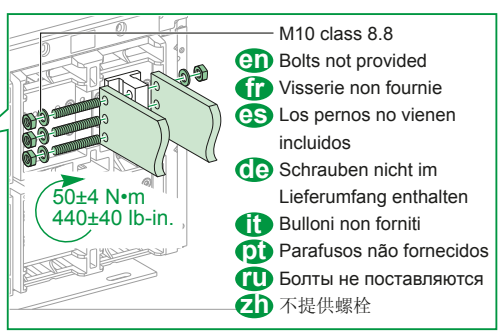

13.6 Rear Connectors, Vertical / Prises arrières verticales / Conectores posteriores de canto / Rückseitige Anschlüsse, vertikal / Attacchi posteriori, verticali / Conetores traseiros, vertical / Задние соединительные элементы, вертикальные / 后端子，垂直

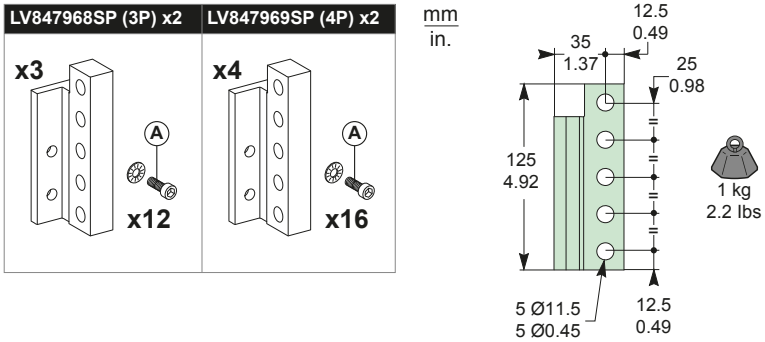

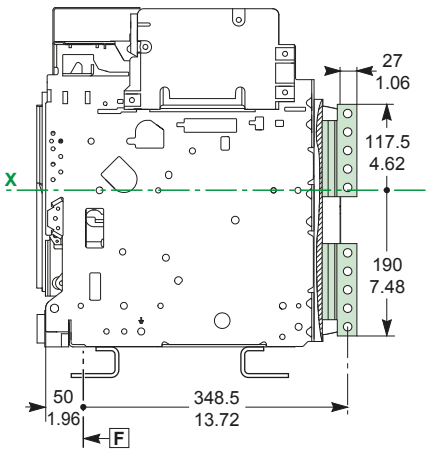

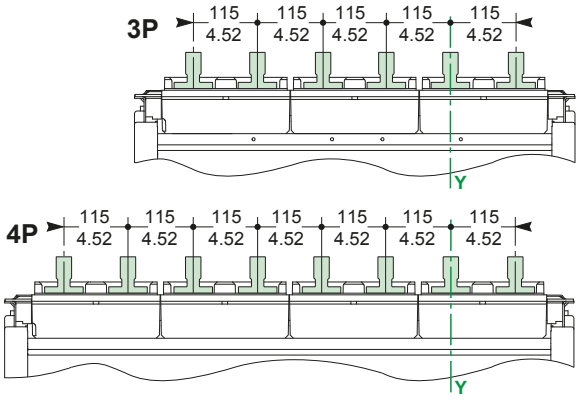

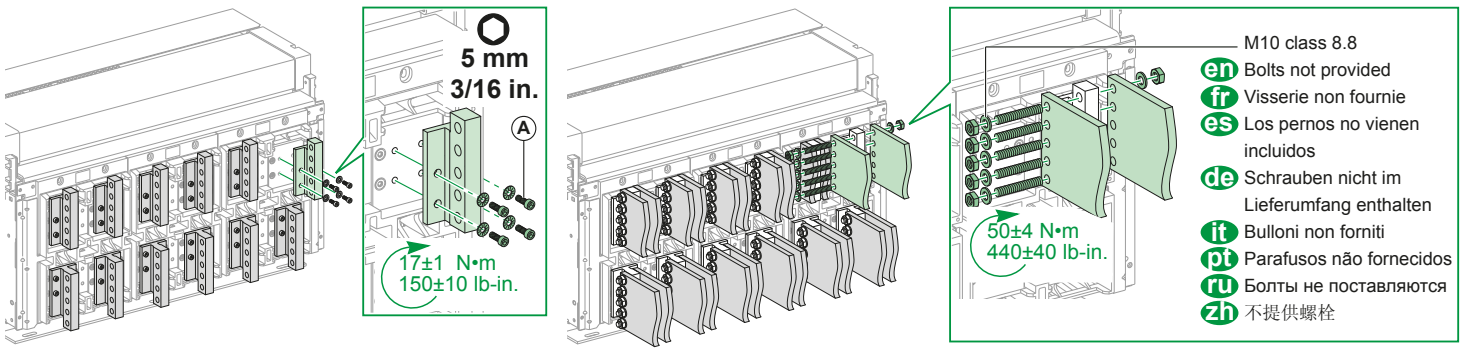

14 Interphase Barriers / Séparateurs de phases / Separadores de fase / Phasentrenner / Separatori di fase / Barreiras interfásicas / Межфазные перегородки / 相间屏障

LV848600SP

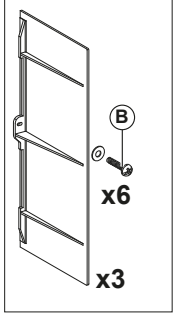

MTZ2 800–3200 A 3P/4P

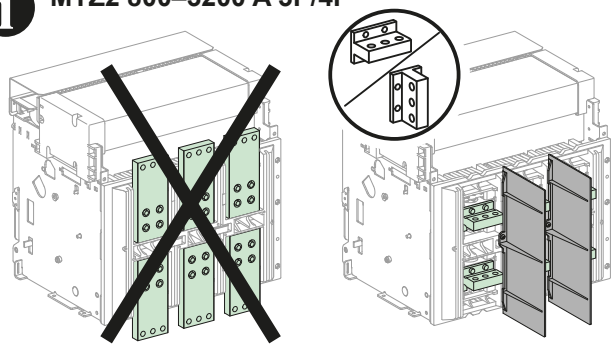

MTZ2 4000 A 3P/4P

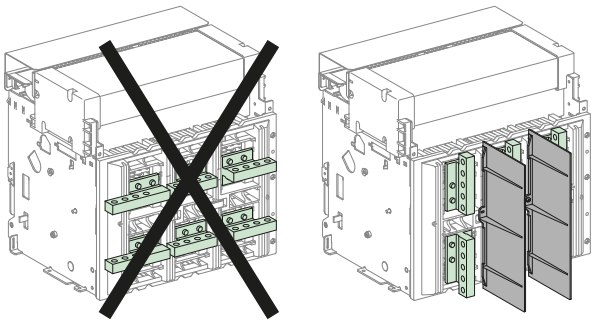

MTZ3 4000–5000 A 3P/4P

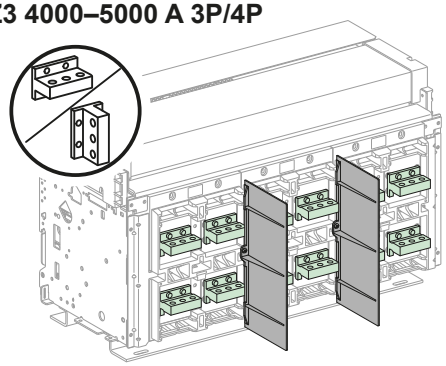

MTZ3 6300 3P/4P

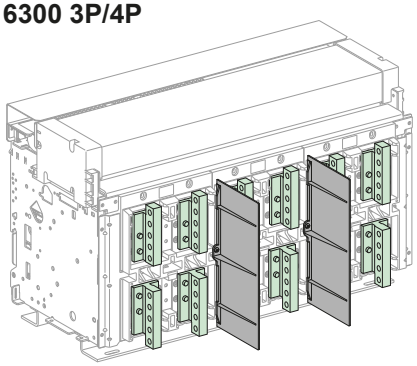

MTZ2 800–4000 3P/4P

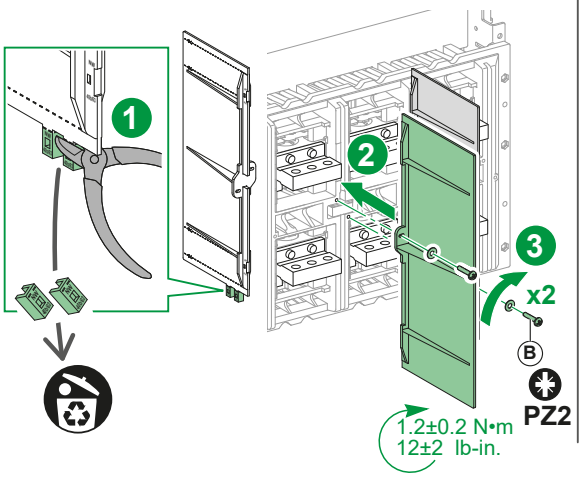

MTZ3 4000–6300 3P/4P

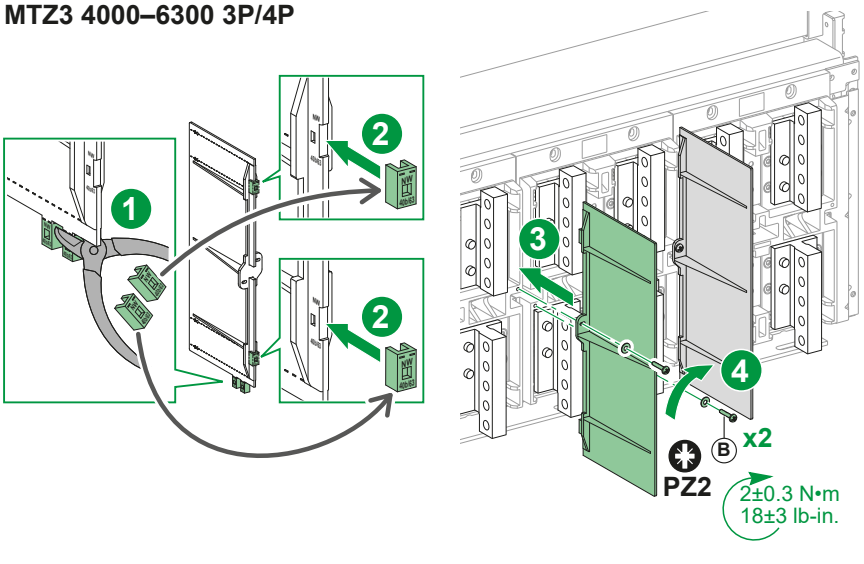

MTZ2 800–4000 3P/4P

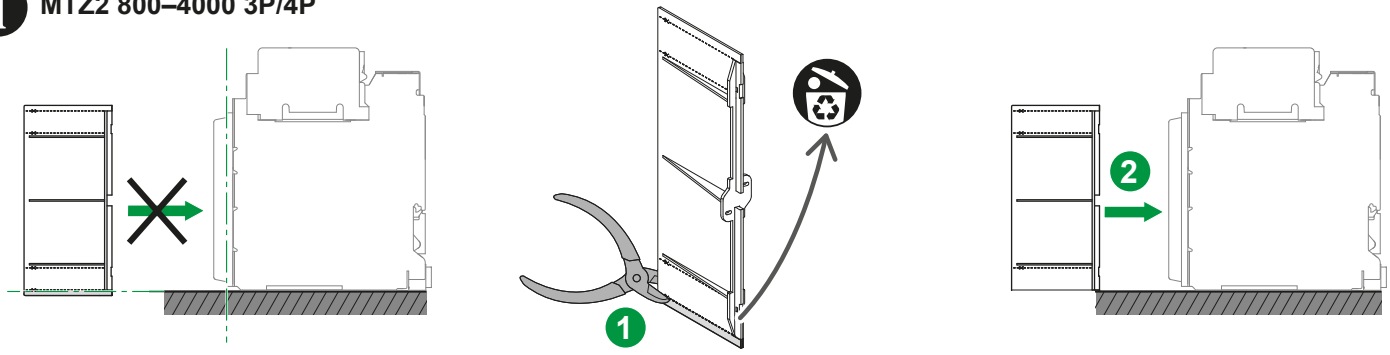

15 Chassis Terminals / Bornes châssis / Terminales de chasis / Klemmen der Einschubkassette / Terminali telaio / Terminais do chassis / Клеммы шасси / 抽架端子

15.1 Layout of Terminal Blocks / Implantation des borniers / Disposición de los borneros / Layout der Klemmleisten / Disposizione delle morsettiere / Disposição dos blocos de terminais / Схема клеммников / 端子板布局

NOTICE / AVIS / AVISO / HINWEIS / AVVISO / AVISO / УВЕДОМЛЕНИЕ / 注意			
LOSS OF DOUBLE INSULATION If a voltage higher than 480 Vac is connected to a terminal, it is forbidden to connect adjacent terminals to a 24 Vdc SELV (Safety Extra Low Voltage) power supply in order to observe the insulation distances. For example, if you connect a 690 Vac supply to the UC4 terminal block, you must not connect a 24 Vdc SELV supply to the SDE2 terminal block. **Failure to follow these instructions will result in a basic/single insulated system.**	**PERTE DE LA DOUBLE ISOLATION** Si une tension supérieure à 480 Vca est raccordée sur une borne, il est interdit de raccorder les bornes voisines en 24 Vcc (TBTS, très basse tension de sécurité) pour respecter les distances d'isolement. Exemple : si une tension de 690 Vca est raccordée sur le bornier UC4, il est interdit de raccorder le bornier SDE2 en 24 Vcc (TBTS). **Si ces directives ne sont pas respectées, cela peut entraîner un système d'isolation restreint à son isolation principale/simple.**	**PÉRDIDA DE DOBLE SECCIONAMIENTO** Si se conecta una tensión nominal superior a 480 V CA a un terminal, no se permite conectar terminales adyacentes a una fuente de alimentación de muy baja tensión de seguridad (MBTS) de 24 V CC para cumplir las distancias de aislamiento. Por ejemplo, si conecta una alimentación de 690 V CA al bornero UC4, no conecte una alimentación de tensión de seguridad muy baja de 24 V CC al bornero SDE2. **El incumplimiento de estas instrucciones provocará la obtención de un sistema básico/aislado único.**	**VERLUST DER DOPPELTEN ISOLIERUNG** Wenn eine Spannung über 480 VAC an eine Klemme angelegt wird, dürfen die neben liegenden Klemmen keinesfalls mit einer 24-Vcc-SELV-Spannungsversorgung (Sicherheitskleinspannung) verbunden werden, damit die Isolationsabstände eingehalten werden können. Wenn Sie beispielsweise eine 690 VAC-Versorgung an die UC4-Klemmleiste anschließen, dürfen Sie an der SDE2-Klemmleiste keine 24 VDC-Versorgung anschließen. **Wenn diesen Anweisungen nicht nachgekommen wird, ist das Resultat ein einfach- oder basisisoliertes System.**
PERDITA DEL DOPPIO ISOLAMENTO Se si collega una tensione superiore a 480 Vca a un terminale, è vietato collegare i terminali adiacenti a un'alimentazione da 24 Vcc SELV (Safety Extra Low Voltage) al fine di osservare le distanze di isolamento. Ad esempio, se si collega un'alimentazione a 690 Vca alla morsettiera UC4, non si deve collegare un'alimentazione a 24 Vcc SELV alla morsettiera SDE2. **Il mancato rispetto di queste istruzioni darà luogo a un sistema di base/con isolamento singolo.**	**PERDA DE ISOLAMENTO DUPLO** Se uma tensão mais alta que 480 Vac estiver conectada a um terminal, não conecte os terminais adjacentes a uma fonte de energia de 24 Vcc SELV (Tensão extra baixa de segurança) para observar as distâncias de isolamento. Por exemplo, se ligar uma fonte de alimentação de 690 Vca ao bloco de terminais UC4, não deve ligar uma fonte de alimentação SELV de 24 Vcc ao bloco de terminais SDE2. **A não observância destas instruções irá resultar em um sistema com isolamento básico/único.**	**ПОТЕРЯ ДВОЙНОЙ ИЗОЛЯЦИИ** Если к клемме подключено напряжение выше 480 В переменного тока, запрещается подключать смежные клеммы к источнику питания 24 В БСНН (безопасное сверхнизкое напряжение) для соблюдения зазоров для обеспечения изоляции. Например, при подключении источника питания 690 В пер. тока к клеммнику UC4 запрещено подключать источник БСНН 24 В пост. тока к клеммнику SDE2. **При несоблюдении данных инструкций система будет иметь базовую/ одинарную изоляцию.**	丧失双重隔离 如果连接到端子的电压高于 480 Vac，则禁止将相邻端子连接到 24 Vcc SELV（安全特低电压）电源，以便达到隔离距离要求。例如，若将 690 Vac 电源连接到 UC4 端子板，则不得将 24 Vdc SELV 电源连接到 SDE2 端子板。 不遵照这些说明将导致基本/单绝缘系统。

CD3	CD2	CD1
834	824	814
832	822	812
831	821	811

CE6	CE5	CE4
364	354	344
362	352	342
361	351	341

LV833170SP / LV833171SP

(3) (1) (2) (1)

COM	UC1		UC2		SDE2/Res	UC4	UC3	M2C/ESM	SDE1	CE3	CE2	CE1
	T6	M1	M2	M3/T1 T5	184/K2	V3	-	484	84	334	324	314
→ EIFE	Z3	Z4	AF3	T2	182/ -	V2	VN	474	82	332	322	312
F2 + F1 -	Z1	Z2	AF1	AF2	181/K1	V1	-	471	81	331	321	311

CT6	CT5	CT4
964	954	944
962	952	942
961	951	941

ULP port **LV847850SP** **LV847849SP** **LV833170SP / LV833171SP**

(1)

MN/MX2	MX1	XF	PF	MCH
D2/C12	C2	A2	254	B2
/C13	C3	A3	252	B3
D1/C11	C1	A1	251	B1

LV847849SP

Without EIFE / Sans EIFE / Sin EIFE / Ohne EIFE / Senza EIFE / Sem EIFE / Без EIFE / 不带 EIFE

(1)

OF24	OF23	OF22	OF21	OF14	OF13	OF12	OF11	OF4	OF3	OF2	OF1	CT3	CT2	CT1
244	234	224	214	144	134	124	114	44	34	24	14	934	924	914
242	232	222	212	142	132	122	112	42	32	22	12	932	922	912
241	231	221	211	141	131	121	111	41	31	21	11	931	921	911

CE9	CE8	CE7
394	384	374
392	382	372
391	381	371

CD6	CD5	CD4
864	854	844
862	852	842
861	851	841

LV847849SP **LV833170SP / LV833171SP**

EF24	EF23	EF22	EF21	EF14	EF13	EF12	EF11
248	238	228	218	148	138	128	118
246	236	226	216	146	136	126	116
245	235	225	215	145	135	125	115

LV848477SP / LV848478SP

With EIFE / Avec EIFE / Con EIFE / Mit EIFE / Con EIFE / Com EIFE / C EIFE / 带 EIFE

(1)

OF22	OF21	OF14	OF13	OF12	OF11	OF4	OF3	OF2	OF1	
224	214	144	134	124	114	44	34	24	14	EIFE
222	212	142	132	122	112	42	32	22	12	
221	211	141	131	121	111	41	31	21	11	

LV847849SP **LV851200SP**

EF24	EF23	EF22	EF21	EF14	EF13	EF12	EF11
248	238	228	218	148	138	128	118
246	236	226	216	146	136	126	116
245	235	225	215	145	135	125	115

LV848477SP / LV848478SP

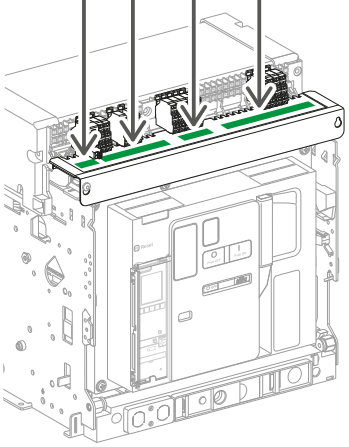

en
(1) Supplied as standard with chassis
(2) Supplied as standard with 3P chassis only
(3) Supplied as standard with chassis for MTZ2/MTZ3 circuit breakers only

fr
(1) Livré en standard avec le châssis
(2) Livrés en standard avec les châssis 3P uniquement
(3) Livrés en standard avec les châssis pour les disjoncteurs MTZ2/MTZ3 uniquement

es
(1) Suministrados de serie con el chasis
(2) Suministrados de serie sólo con el chasis 3P
(3) Suministrados de serie sólo con el chasis para interruptores automáticos MTZ2/MTZ3

de
(1) Standardmäßig im Lieferumfang der Einschubkassette enthalten
(2) Standardmäßig im Lieferumfang der 3P-Einschubkassette enthalten
(3) Nur für MTZ2/MTZ3-Leistungsschalter standardmäßig im Lieferumfang der Einschubkassette enthalten

it
(1) Fornito come standard con il telaio
(2) Fornito come standard solo con il telaio 3P
(3) Fornito come standard con il telaio solo per interruttori MTZ2/MTZ3

pt
(1) Providenciado como standard com chassis
(2) Providenciado como standard somente com chassis 3P
(3) Providenciado como standard com chassis somente para disjuntores MTZ2/MTZ3

ru
(1) Поставляется стандартно с шасси
(2) Поставляется стандартно только с шасси 3P
(3) Поставляется стандартно с шасси только для автоматических выключателей MTZ2/MTZ3

zh
(1) 抽架的标配
(2) 仅 3P 抽架的标配
(3) 仅 MTZ2/MTZ3 断路器用抽架的标配

15.2 Auxiliary Terminal Shields Removal / Démontage des capots bornier auxiliaire / Extracción de los cubrebornes auxiliares / Entfernen der Abdeckung der Zubehöranschlussklemmen / Rimozione protezione sulla morsettiera ausiliaria / Remoção das blindagens dos terminais auxiliares / Снятие вспомогательных электроизоляторов клемм / 拆除二次接线端子盖板

LV864942SP
LV848596SP
LV848597SP
LV848598SP

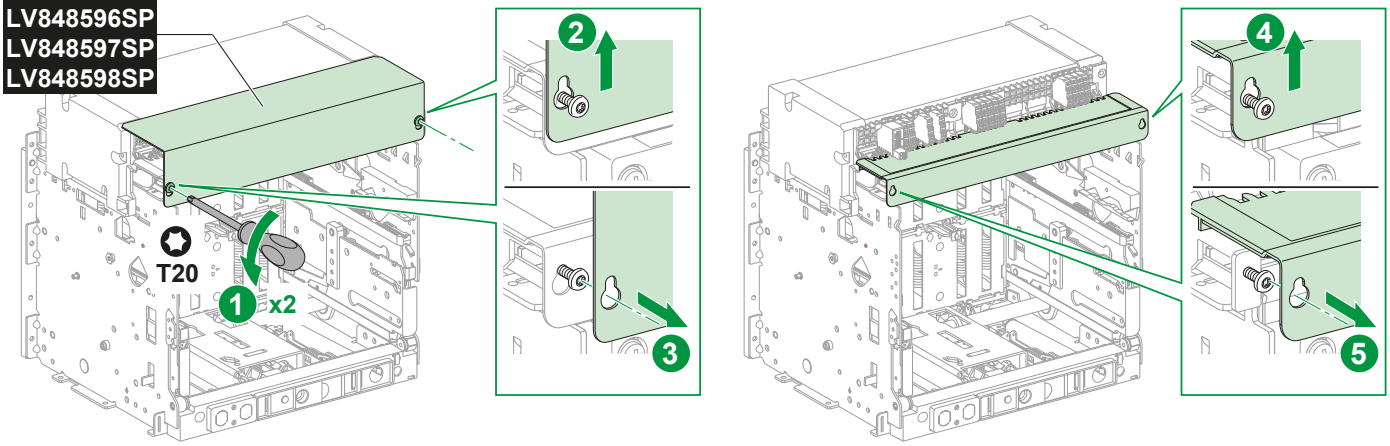

16 Terminal Blocks Installation and Wiring / Installation et câblage des borniers / Instalación y cableado del terminal / Klemmeminstallation und -verdrahtung / Installazione terminale e cablaggio / Instalação e ligação dos terminais / Установка и подключение клемм / 端子安装和接线

16.1 Terminal Blocks Installation / Installation des bornes auxiliaires / Instalación del terminal auxiliar / Zubehörklemmeninstallation / Installazione terminale ausiliario / Instalaçãodos bornes auxiliares / Установка вспомогательного клеммника / 二次接线端子安装

LV847849SP
LV847850SP

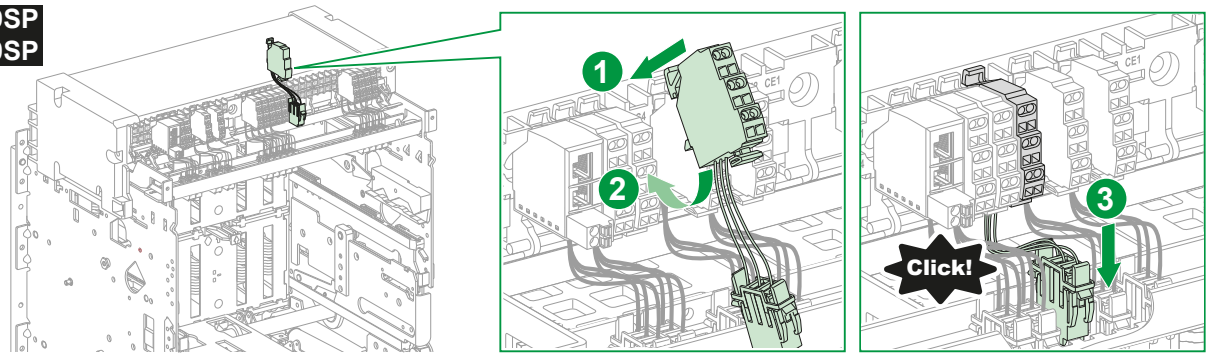

16.2 EF Terminals and Actuator Installation / Installation des bornes et actionneur EF / Instalación del actuador y terminales EF / EF-Klemmen- und Aktuatorinstallation / Installazione attuatore e terminali EF / Terminais EF e instalação do atuador / Монтаж клемм EF и исполнительного устройства / EF 端子和致动器安装

LV848477SP
LV848478SP

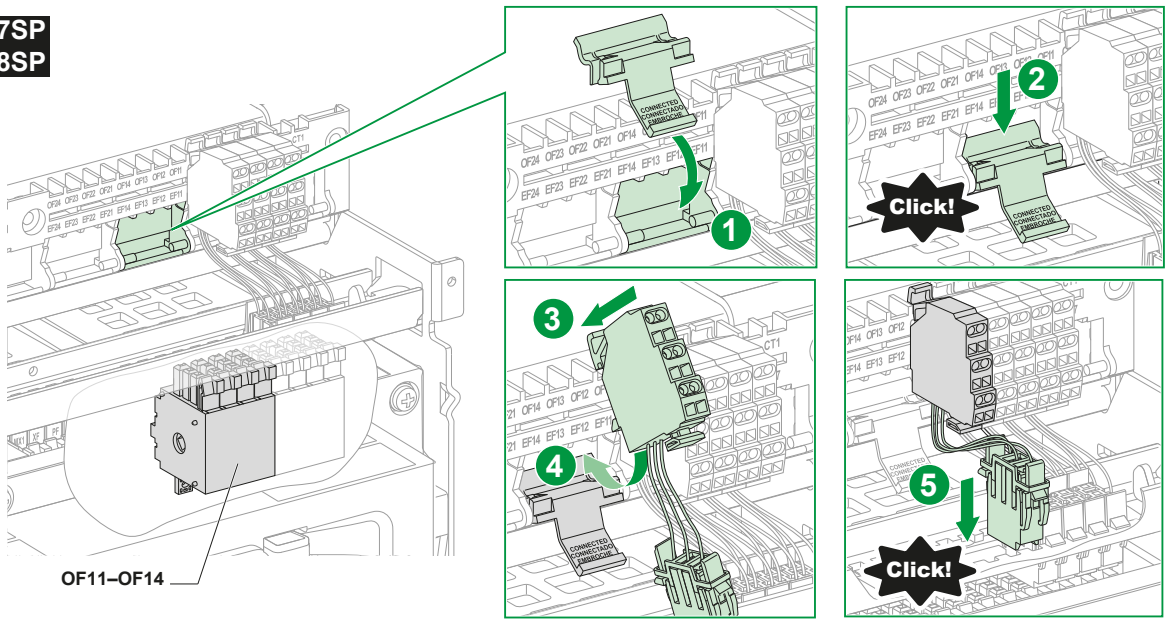

16.3 Wiring / Câblage / Cableado / Verkabelung / Cablaggio / Cablagem / Кабель / 电缆

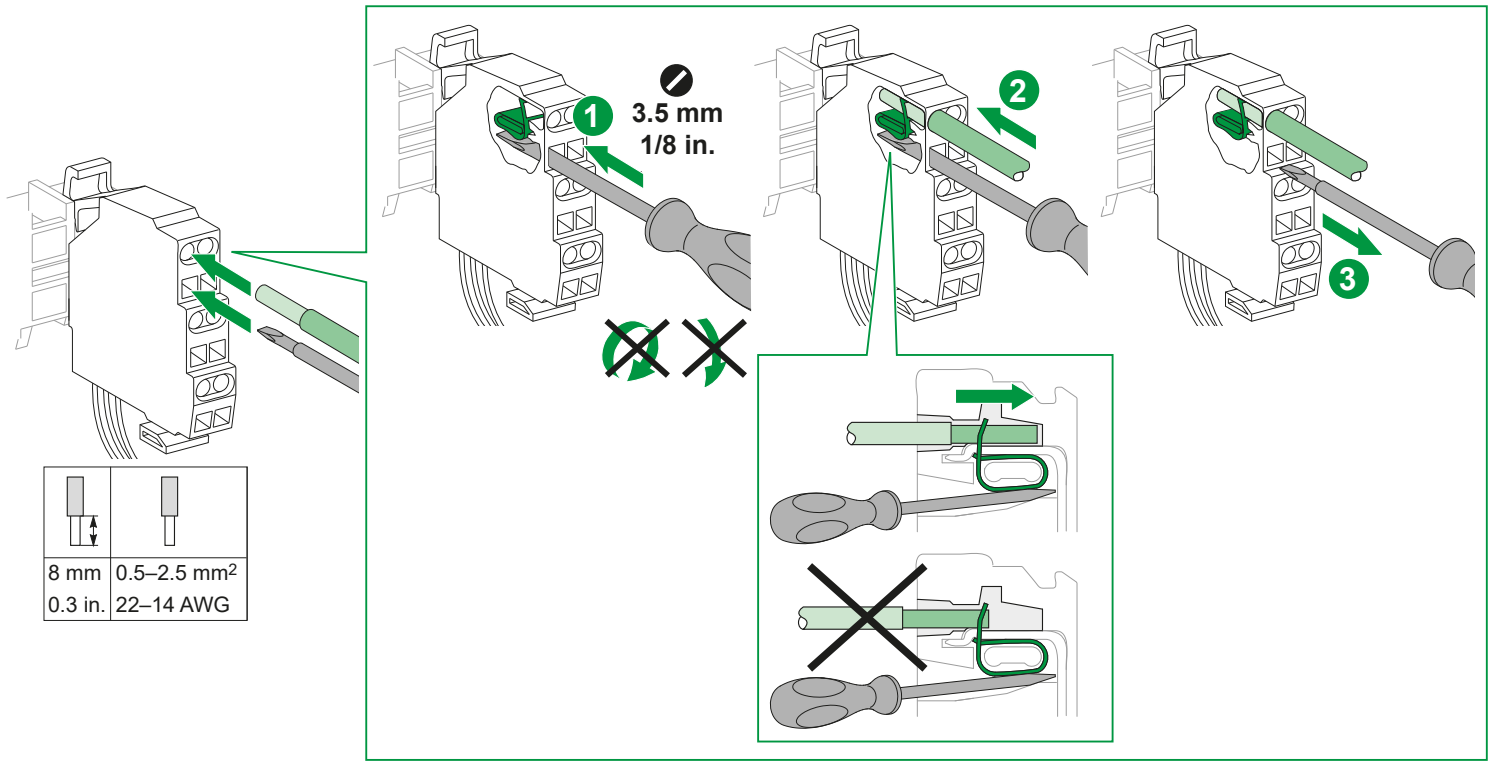

16.4 Terminal Block Identification Plate Installation / Installation de la plaque d'identification des borniers / Instalación de la placa de identificación del bornero / Installation des Typenschilds der Klemmenleiste / Installazione piastra di identificazione morsettiera / Instalação da placa de identificação do bloco terminais / Прикрепление таблички с паспортными данными клеммного блока / 接线端子铭牌安装

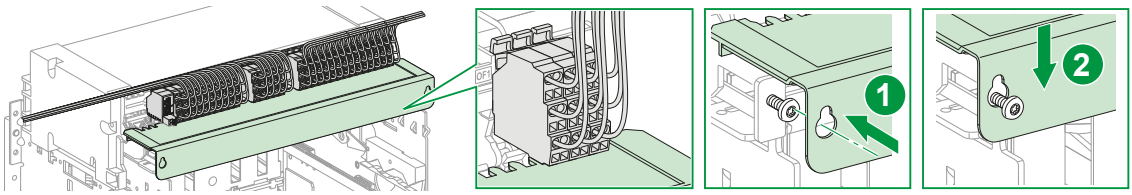

16.5 Removal / Démontage / Extracción / Entfernen / Rimozione / Remoção / Извлечение / 拆卸

en
- Put the circuit breaker in the test position, see page 17.
- Remove in reverse order of installation.

fr
- Mettez le disjoncteur en position test, voir section page 17.
- Démontez dans l'ordre inverse de l'installation.

es
- Coloque el interruptor automático en la posición de test (consulte la página 17).
- Realice la extracción en el orden inverso al de la instalación.

de
- Bewegen Sie den Leistungsschalter in die Teststellung, siehe Seite 17.
- Führen Sie die Entfernung in umgekehrter Reihenfolge zur Installation durch.

it
- Mettere l'interruttore nella posizione di test, vedere a pagina 17.
- Per la rimozione procedere nell'ordine inverso dell'installazione.

pt
- Coloque o disjuntor na posição de teste, consulte a página 17.
- Remova pela ordem inversa da instalação.

ru
- Переведите автоматический выключатель в положение испытание, см. с. 17.
- Извлечение производят в порядке, обратном порядку установки.

zh
- 将断路器置于测试 位置，参见第 17 页。
- 拆卸步骤与安装步骤相反。

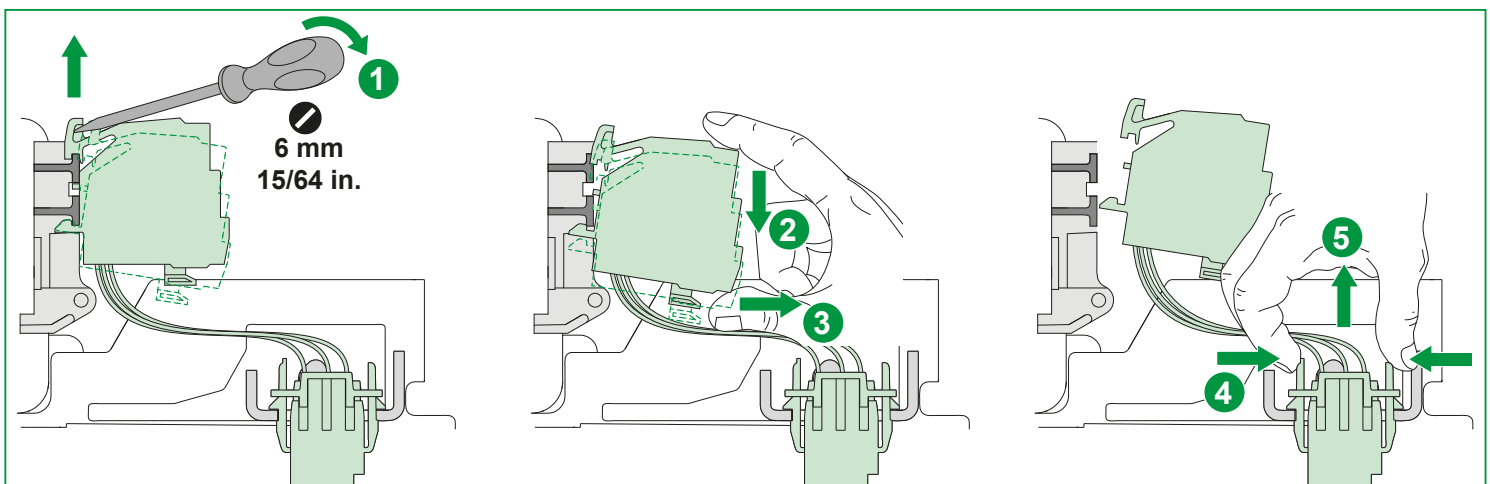

17 ULP Port Module Wiring / Câblage du module port ULP / Cableado de módulo de puerto ULP / Verdrahtung des ULP-Portmoduls / Cablaggio modulo porta ULP / Ligação do módulo da porta ULP / Подключение модуля порта ULP / ULP 端口模块接线

NOTICE / AVIS / AVISO / HINWEIS / AVVISO / AVISO / УВЕДОМЛЕНИЕ / 注意

LOSS OF DOUBLE INSULATION
- Supply the ULP port module with 24 Vdc SELV (Safety Extra Low Voltage) power supply only, paying attention to polarity (the ULP port module supplies the Micrologic X control unit).
- Do not supply single-insulated non-SELV devices with this 24 Vdc SELV power supply (for example, do not use the same 24 Vdc SELV power supply to supply a Micrologic X control unit for Masterpact MTZ and a Micrologic A/E/P/H for Masterpact NT/NW).

Failure to follow these instructions will result in a basic/single insulated system.

PERTE DE LA DOUBLE ISOLATION
- Alimentez le module port ULP en 24 Vcc TBTS (très basse tension de sécurité) uniquement, en respectant la polarité (le module port ULP alimente l'unité de contrôle Micrologic X).
- N'alimentez pas d'appareils non TBTS à simple isolation avec cette même alimentation 24 Vcc TBTS (par exemple, n'utilisez pas la même alimentation 24 Vcc TBTS pour alimenter une unité de contrôle Micrologic X pour Masterpact MTZ et une unité de contrôle Micrologic A/E/P/H pour Masterpact NT/NW).

Si ces directives ne sont pas respectées, cela peut entraîner un système d'isolation restreint à son isolation principale/simple.

PÉRDIDA DE DOBLE SECCIONAMIENTO
- Conecte el módulo de puerto ULP sólo con una fuente de alimentación de muy baja tensión de seguridad (MBTS) de 24 V CC, respetando la polaridad (el módulo de puerto ULP alimenta la unidad de control Micrologic X).
- No alimente dispositivos con tensiones no MBTS de aislamiento simple con esta alimentación MBTS de 24 V CC (por ejemplo, no utilice la misma fuente de alimentación MBTS de 24 V CC para alimentar una unidad de control Micrologic X para Masterpact MTZ y una Micrologic A/E/P/H para Masterpact NT/NW).

El incumplimiento de estas instrucciones provocará la obtención de un sistema básico/aislado único.

VERLUST DER DOPPELTEN ISOLIERUNG
- Speisen Sie das ULP-Portmodul ausschließlich über eine 24-Vcc-SELV-Spannungsversorgung (Sicherheitskleinspannung), wobei auf die Polarität geachtet werden muss (das ULP-Portmodul versorgt die Micrologic X-Steuereinheit).
- Einfach isolierte Nicht-SELV-Geräte dürfen nicht über diese 24-Vcc-SELV-Spannungsversorgung gespeist werden (verwenden Sie beispielsweise nicht dieselbe 24-Vcc-SELV-Spannungsversorgung zur Speisung einer Micologic X-Steuereinheit für Masterpact MTZ und einer Micrologic A/E/P/H für Masterpact NT/NW).

Wenn diesen Anweisungen nicht nachgekommen wird, ist das Resultat ein einfach- oder basisisoliertes System.

PERDITA DEL DOPPIO ISOLAMENTO
- Fornire al modulo porta ULP solo alimentazione a 24 Vcc SELV (Safety Extra Low Voltage), facendo attenzione alla polarità (il modulo porta ULP alimenta l'unità di controllo Micrologic X).
- Non alimentare dispositivi non SELV a singolo isolamento con questa alimentazione a 24 Vcc SELV (ad esempio, non utilizzare la stessa alimentazione 24 Vcc SELV per alimentare un'unità di controllo Micrologic X per Masterpact MTZ e un Micrologic A/E/P/H per Masterpact NT/NW).

Il mancato rispetto di queste istruzioni darà luogo a un sistema di base/con isolamento singolo.

PERDA DE ISOLAMENTO DUPLO
- Forneça energia ao módulo da porta ULP apenas com fonte de energia de 24 Vcc SELV (Tensão extra baixa de segurança), prestando atenção à polaridade (o módulo da porta ULP alimenta a unidade de controle Micrologic X).
- Não forneça energia a dispositivos com isolamento simples não SELV com essa fonte de energia de 24 Vcc SELV (por exemplo não use a mesma fonte de energia de 24 Vcc para fornecer energia a uma unidade de controle Micrologic X para Masterpact MTZ e um Micrologic A/E/P/H para Masterpact NT/NW).

A não observância destas instruções irá resultar em um sistema com isolamento básico/único.

ПОТЕРЯ ДВОЙНОЙ ИЗОЛЯЦИИ
- Питание на модуль порта ULP можно подавать только от источника питания 24 В БСНН (безопасное сверхнизкое напряжение), учитывая полярность (от модуля порта ULP подается питание на блок управления Micrologic X).
- Запрещается подавать питание на устройства без БСНН с одной изоляцией с данного источника питания 24 В БСНН (например, запрещается использовать один и тот же источник питания 24 В БСНН для подачи питания на блок управления Micrologic X для Masterpact MTZ и Micrologic A/E/P/H для Masterpact NT/NW).

При несоблюдении данных инструкций система будет иметь базовую/ одинарную изоляцию.

丧失双重隔离
- 仅对 ULP 端口模块使用 24 Vcc SELV（安全特低电压）电源，请注意极性（ULP 端口模块为 Micrologic X 控制单元供电）。
- 不得使用这种 24 Vcc SELV 电源为单绝缘型非 SELV 设备供电（比如，不得使用同一 24 Vcc SELV 电源为 Masterpact MTZ 的 Micrologic X 控制单元以及 Masterpact NT/NW 的 Micrologic A/E/P/H 供电）。

不遵照这些说明将导致基本/单绝缘系统。

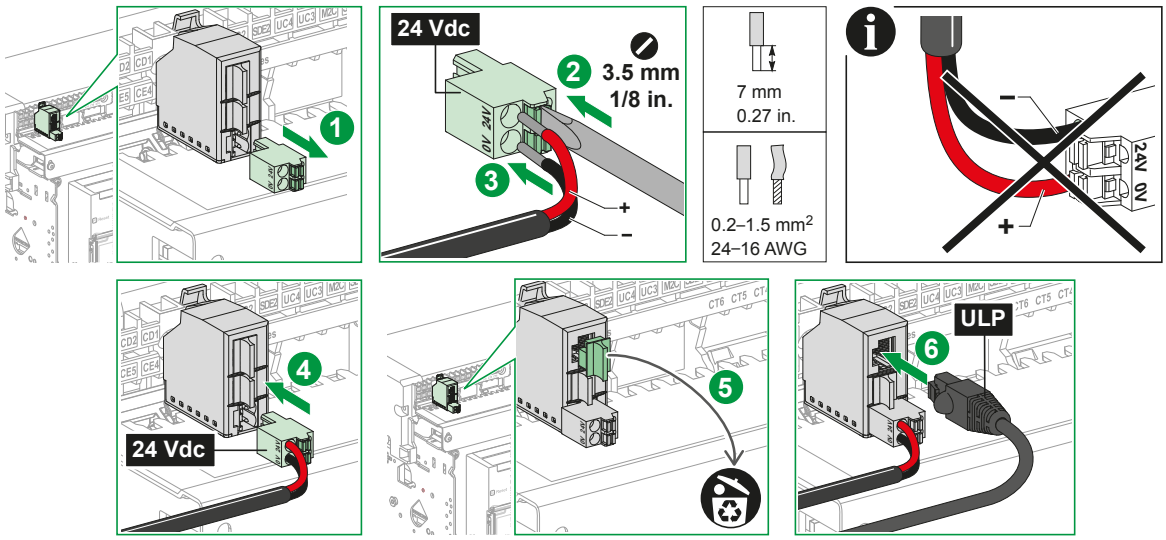

en Use the same 24 Vdc SELV power supply to supply the Micrologic X control unit and the other ULP modules connected to the ULP port module.

fr Utilisez la même alimentation 24 Vcc TBTS pour alimenter l'unité de contrôle Micrologic X et les autres modules ULP raccordés sur le module port ULP.

es Utilice la misma alimentación MBTS de 24 V CC para alimentar la unidad de control Micrologic X y los otros módulos ULP conectados al módulo de puerto ULP.

de Verwenden Sie dieselbe 24-Vcc-SELV-Spannungsversorgung zur Speisung der Micologic X-Steuereinheit und der anderen mit dem ULP-Portmodul verbundenen ULP-Module.

it Utilizzare la stessa alimentazione 24 Vcc SELV per alimentare l'unità di controllo Micrologic X e altri moduli ULP connessi al modulo porta ULP.

pt Use a mesma fonte de energia de 24 Vcc SELV para fornecer energia à unidade de controle Micrologic X e os outros módulos ULP conectados ao módulo da porta ULP.

ru Используйте один и тот же источник питания 24 В БСНН для подачи питания на блок питания Micrologic X и другие модули ULP, подключенные к модулю порта ULP.

zh 使用相同的 24 伏直流SELV电源供给的 Micrologic X 控制单元和连接到 ULP 端口模块的其他 ULP 模块。

18 Wiring Diagrams / Schémas de câblage / Esquemas eléctricos / Verdrahtungspläne / Schemi di cablaggio / Diagramas de ligação / Схемы подключения / 接线图

en The diagrams are shown with circuits de-energized, all devices open, connected and charged, and relays in normal position

fr Les schémas montrent les circuits hors tension, tous les appareils ouverts, raccordés et armés, et les relais en position normale.

es Los diagramas se muestran con los circuitos deenergizados, todos los aparatos abiertos, conectados y cargados, y los relés en posición normal

de Die Abbildungen zeigen die Stromkreise als nicht spannungsführend, mit allen Geräten offen, verbunden und gespannt, und Relais in normaler Position.

it Gli schemi sono visualizzati con i circuiti non in tensione, tutti i dispositivi aperti, collegati e caricati e i relè in posizione normale.

pt Os diagramas são apresentados com os circuitos desenergizados, todos os dispositivos abertos, conetados e carregados e os relés na posição normal

ru На приведенных ниже схемах питание отключено, все аппараты разомкнуты, подключены и взведены, а реле находятся в исходном состоянии.

zh 在所示接线图中，电路 断电，所有设备开路， 已连接并储能，继电器 处于正常位置.

NOTICE / AVIS / AVISO / HINWEIS / AVVISO / AVISO / УВЕДОМЛЕНИЕ / 注意

HAZARD OF DESTRUCTION OF THE CONTROL UNIT OR ACCESSORIES Observe the voltages and polarities for the power supply to accessories when wiring the customer terminal block. **Failure to follow these instructions can result in equipment damage.**	**RISQUE DE DESTRUCTION DE L'UNITE DE CONTROLE OU DES ACCESSOIRES** Respectez les tensions et les polarités pour l'alimentation des accessoires lors du câblage du bornier client. **Si ces directives ne sont pas respectées, cela peut entraîner des dommages matériels.**	**RIESGO DE DESTRUCCIÓN DE LA UNIDAD DE CONTROL O LOS ACCESORIOS** Respete las tensiones y las polaridades para la alimentación de los accesorios al cablear el bornero del cliente. **El incumplimiento de estas instrucciones puede causar daño al equipo.**	**RISIKO DER ZERSTÖRUNG DES AUSLÖSESYSTEMS ODER DES ZUBEHÖRS** Beachten Sie die Spannungen und Polaritäten für die Spannungsversorgung des Zubehörs bei der Verdrahtung der Kunden-Klemmenleiste. **Die Nichtbeachtung dieser Anweisungen kann Sachschäden zur Folge haben.**
RISCHIO DI DISTRUZIONE DELL'UNITÀ DI CONTROLLO O DEGLI ACCESSORI Osservare le tensioni e le polarità per l'alimentazione degli accessori quando si esegue il cablaggio della morsettiera del cliente. **Il mancato rispetto di queste istruzioni può provocare danni alle apparecchiature.**	**RISCO DE DESTRUIÇÃO DA UNIDADE DE CONTROLE OU DOS ACESSÓRIOS** Observe as tensões e polaridades para a fonte de energia a acessórios ao conectar o bloco de terminais do cliente. **A não observância destas instruções pode provocar danos no equipamento.**	**РИСК РАЗРУШЕНИЯ БЛОКА КОНТРОЛЯ И УПРАВЛЕНИЯ ИЛИ ВСПОМОГАТЕЛЬНЫХ УСТРОЙСТВ** Соблюдайте напряжение и полярность для источников питания принадлежностей при прокладке электрических проводов к клеммнику заказчику. **Несоблюдение этих инструкций может привести к повреждению оборудования.**	控制单元或配件 损毁风险 在连接客户的端子块时，确保连接到附件的电源的电压和极性均正确。 不遵循上述说明可能导致设备损坏。

18.1 Power and Control Unit / Puissance et unité de contrôle / Unidad de control y alimentación / Strom- und Auslösesystem / Alimentazione e unità di controllo / Potência e unidade de controle / Питание и блок контроля и управления / 功率和控制单元

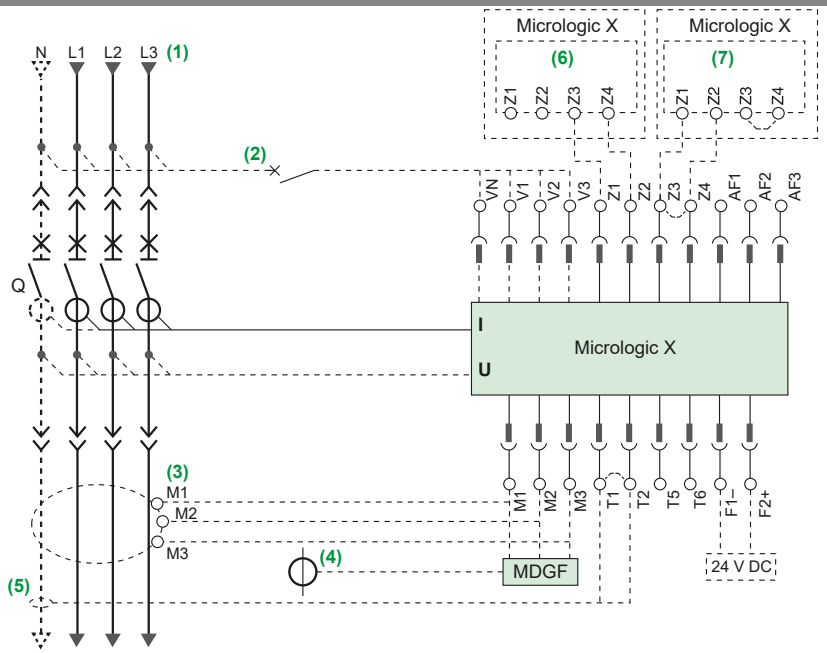

en
- (1) Power
- (2) Connection for PTE option
- (3) Rectangular sensor option
  or
- (4) SGR sensor option
- (5) Neutral external sensor option
- (6) Upstream circuit breaker, connected for ZSI function
- (7) Downstream circuit breaker, connected for ZSI function

NOTE:
- Remove jumper between Z3-Z4 when connecting the downstream circuit breaker.
- Remove jumper between T1-T2 when connecting the neutral external sensor.
- 10 spare jumpers (LV847900SP) can be ordered if necessary.

fr
- (1) Puissance
- (2) Raccordement de l'option PTE
- (3) Option cadre sommateur
  ou
- (4) Option capteur SGR
- (5) Option capteur de neutre externe
- (6) Disjoncteur amont, raccordé pour la fonction ZSI
- (7) Disjoncteur aval, raccordé pour la fonction ZSI

NOTA :
- Retirer le cavalier Z3-Z4 avant de raccorder le disjoncteur aval.
- Retirer le cavalier T1-T2 avant de raccorder le capteur de neutre externe.
- il est possible de commander 10 cavaliers supplémentaires (LV847900SP) si nécessaire.

es
- (1) Alimentación
- (2) Conexión para la opción PTE
- (3) Opción de trafo rectangular
  o
- (4) Opción de sensor SGR
- (5) Opción de sensor externo neutro
- (6) Interruptor automático aguas arriba, conectado para función ZSI
- (7) Interruptor automático aguas abajo, conectado para función ZSI

NOTA:
- Extraiga el puente entre Z3-Z4 cuando conecte el interruptor automático aguas abajo.
- Extraiga el puente entre T1-T2 cuando conecte el sensor externo neutro.
- Pueden solicitarse 10 puentes de repuesto (LV847900SP) si es necesario.

de
- (1) Leistung
- (2) Verbindung für PTE-Option
- (3) Rechteckiger Sensor (Option)
  oder
- (4) SGR-Sensor (Option)
- (5) Neutraler externer Sensor (Option)
- (6) Vorgeschalteter Leistungsschalter, angeschlossen für ZSI-Funktion
- (7) Nachgeschalteter Leistungsschalter, angeschlossen für ZSI-Funktion

HINWEIS:
- Entfernen Sei den Jumper zwischen Z3-Z4, wenn Sie den nachgeschalteten Leistungsschalter anschließen.
- Entfernen Sie den Jumper zwischen T1-T2, wenn Sie den neutralen externen Wandler anschließen.
- 10 Ersatz-Jumper (LV847900SP) können bestellt werden, wenn nötig.

it
(1) Alimentazione
(2) Connessione per opzione PTE
(3) Toroide rettangolare opzionale oppure
(4) TA SGR opzionale
(5) TA esterno neutro opzionale
(6) Interruttore a monte, collegato per funzione ZSI
(7) Interruptor automático aguas abajo, conectado para función ZSI

pt
(1) Potência
(2) Ligação para a opção PTE
(3) Opção de sensor retangular ou
(4) Opção de sensor SGR
(5) Opção do sensor externo neutro
(6) Disjuntor a montante, conectado para a função ZSI
(7) Disjuntor a jusante, conectado para a função ZSI

ru
(1) Питание
(2) Подключение для PTE
(3) Прямоугольный датчик (опция) или
(4) Датчик SGR (опция)
(5) Нейтральный внешний датчик (опция)
(6) Вышестоящий автоматический выключатель, подключенный для функции ZSI
(7) Нижестоящий автоматический выключатель, подключенный для функции ZSI

zh
(1) 功率
(2) PTE 选项连接
(3) 矩形互感器选项或
(4) SGR 互感器选项
(5) 中性线外部互感器选项
(6) 上游断路器，连接后用于 ZSI 功能
(7) 下游断路器，连接后用于 ZSI 功能

NOTA:
● Rimuovere il ponticello tra Z3-Z4 quando si collega l'interruttore a valle.
● Rimuovere il ponticello tra T1-T2 quando si collega il TA esterno neutro.
● È possibile ordinare 10 ponticelli di ricambio (LV847900SP) se necessario.

NOTA:
● Retire a ligação direta entre Z3-Z4 quando ligar o disjuntor a jusante.
● Remova a ligação direta entre T1-T2 quando ligar o sensor externo neutro.
● Se necessário, pode encomendar 10 ligações diretas sobresselentes (LV847900SP).

ПРИМЕЧАНИЕ:
● В случае подключения нижестоящего автоматического выключателя следует снять перемычку между Z3—Z4.
● В случае подключения нейтрального внешнего датчика снимите перемычку между T1—T2.
● При необходимости можно заказать 10 запасных перемычек (LV847900SP).

注:
● 连接 下游 断路器时，应拆下 Z3-Z4 之间的跳线.
● 连接 中性线外部 互感器时，应拆下 T1-T2 之间的跳线。
● 若需要，可订购 10 个备用跳线 (LV847900SP)。

18.2 Indication Contacts and Chassis Contacts / Contacts de signalisation et contacts châssis / Contactos de señalización y del chasis / Meldeschalter und Einschubkassettenkontakte / Contatti di segnalazione e contatti telaio / Contatos de sinalização chassis / Контакты сигнализации и контакты шасси / 指示触点和抽架触点

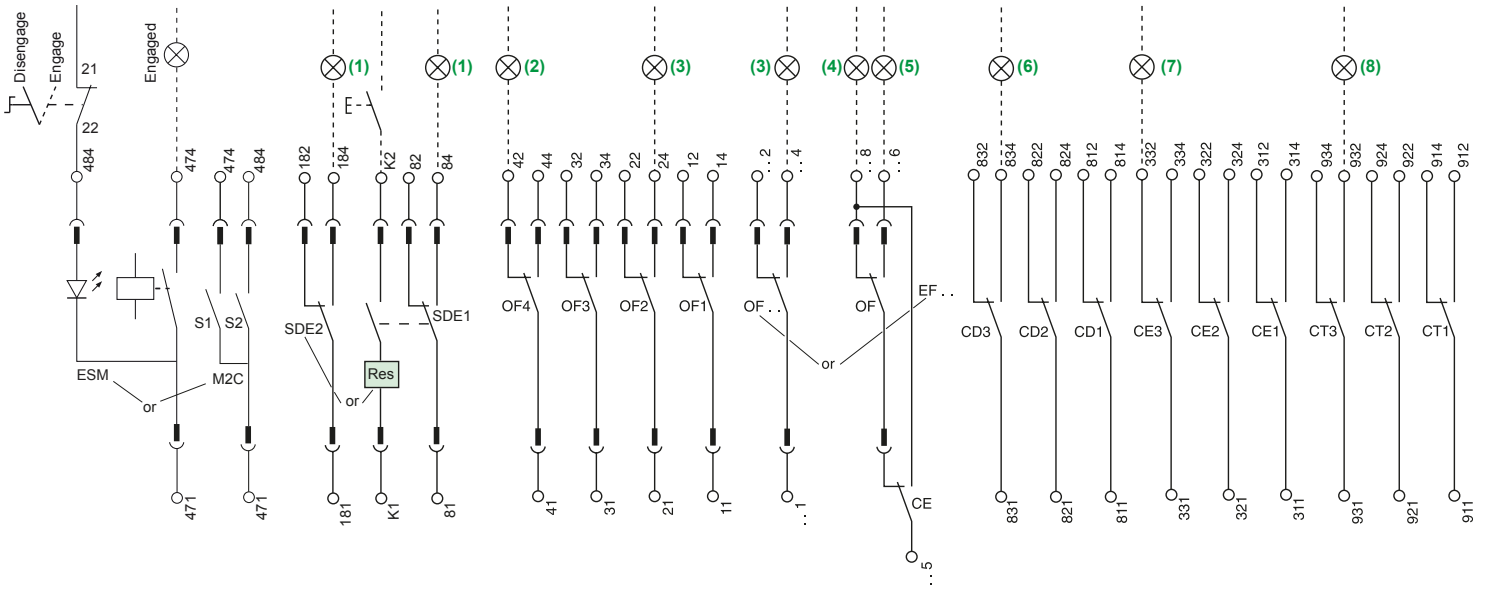

en
(1) Fault
(2) Open
(3) Closed
(4) Not connected or connected and open
(5) Connected and closed
(6) Disconnected
(7) Connected
(8) Test

fr
(1) Défaut
(2) Ouvert
(3) Fermé
(4) Débroché ou bien embroché et ouvert
(5) Embroché et fermé
(6) Débroché
(7) Embroché
(8) Test

es
(1) Fallo
(2) Abierto
(3) Cerrado
(4) No conectado, o conectado y abierto
(5) Conectado y cerrado
(6) Desconectado
(7) Conectado
(8) Prueba

de
(1) Fehler/Auslösung
(2) Offen
(3) Geschlossen
(4) Nicht verbunden oder verbunden und offen
(5) Verbunden und geschlossen
(6) Nicht verbunden
(7) Verbunden
(8) Test

it
(1) Guasto
(2) Aperto
(3) Chiuso
(4) Non collegato o collegato e aperto
(5) Collegato e chiuso
(6) Scollegato
(7) Collegato
(8) Test

pt
(1) Falha
(2) Aberto
(3) Fechado
(4) Não está ligado ou está ligado e aberto
(5) Ligado e fechado
(6) Desligado
(7) Ligado
(8) Teste

ru
(1) Сбой
(2) Разомкнут
(3) Замкнут
(4) Не подключен либо подключен и разомкнут
(5) Подключен и замкнут
(6) Отключено
(7) Подключено
(8) Проверка

zh
(1) 故障
(2) 分闸
(3) 合闸
(4) 未连接或已连接但分闸
(5) 已连接且已合闸
(6) 已退出
(7) 已连接
测试

18.3 External 24 Vdc AD Power Supply Module / Module d'alimentation externe AD 24 Vcc / Módulo externo de fuente de alimentación de 24 V CC AD / Externes 24 VDC-Stromversorgungsmodul (AD) / Modulo di alimentazione esterno 24 Vcc AD / Módulo da fonte de alimentação AD de 24 Vcc externa / Внешний модуль блока питания 24 В пост. тока / 外部 **24 Vdc AD** 供电模块

NOTICE / AVIS / AVISO / HINWEIS / AVVISO / AVISO / УВЕДОМЛЕНИЕ / 注意

LOSS OF DOUBLE INSULATION
Do not supply single-insulated non-SELV devices with the AD external 24 Vdc SELV power supply module of the Micrologic X control unit (for example, do not use the same AD 24 Vdc SELV power supply module to supply a Micrologic X control unit for Masterpact MTZ and a Micrologic A/E/P/H for Masterpact NT/NW).
Failure to follow these instructions will result in a basic/single insulated system.

PERTE DE LA DOUBLE ISOLATION
N'alimentez pas d'appareils non TBTS à simple isolation avec le module d'alimentation externe AD 24 Vcc TBTS de l'unité de contrôle Micrologic X.
Par exemple, n'utilisez pas le même module d'alimentation AD 24 Vcc TBTS pour alimenter une unité de contrôle Micrologic X pour Masterpact MTZ et une unité de contrôle Micrologic A/E/P/H pour Masterpact NT/NW.
Si ces directives ne sont pas respectées, cela peut entraîner un système d'isolation restreint à son isolation principale/simple.

PÉRDIDA DE DOBLE SECCIONAMIENTO
No alimente dispositivos con tensiones no MBTS de aislamiento simple con el módulo de alimentación externo AD MBTS de 24 V CC de la unidad de control Micrologic X (por ejemplo, no utilice el mismo módulo de alimentación AD MBTS de 24 V CC para alimentar una unidad de control Micrologic X para Masterpact MTZ y una Micrologic A/E/P/H para Masterpact NT/NW).
El incumplimiento de estas instrucciones provocará la obtención de un sistema básico/aislado único.

VERLUST DER DOPPELTEN ISOLIERUNG
Einfach isolierte Nicht-SELV-Geräte dürfen nicht über das externe 24-Vcc-SELV-AD-Spannungsversorgungsmodul der Micrologic X-Steuereinheit gespeist werden (verwenden Sie beispielsweise nicht dasselbe 24-Vcc-SELV-AD-Spannungsversorgungsmodul zur Speisung einer Micologic X-Steuereinheit für Masterpact MTZ und einer Micrologic A/E/P/H für Masterpact NT/NW).
Wenn diesen Anweisungen nicht nachgekommen wird, ist das Resultat ein einfach- oder basisisoliertes System.

PERDITA DEL DOPPIO ISOLAMENTO
Non alimentare dispositivi non SELV a singolo isolamento con il modulo di alimentazione a 24 Vcc SELV esterno AD dell'unità di controllo Micrologic X (ad esempio, non utilizzare lo stesso modulo di alimentazione 24 Vcc SELV AD per alimentare un'unità di controllo Micrologic X per Masterpact MTZ e un Micrologic A/E/P/H per Masterpact NT/NW).
Il mancato rispetto di queste istruzioni darà luogo a un sistema di base/con isolamento singolo.

PERDA DE ISOLAMENTO DUPLO
Não forneça energia a dispositivos com isolamento simples não SELV com módulo de alimentação AD externo de 24 Vcc SELV da unidade de controle Micrologic X (por exemplo não use o mesmo módulo de fornecimento de energia AD de 24 Vcc SELV para fornecer energia a uma unidade de controle Micrologic X para Masterpact MTZ e uma Micrologic A/E/P/H para Masterpact NT/NW).
A não observância destas instruções irá resultar em um sistema com isolamento básico/único.

ПОТЕРЯ ДВОЙНОЙ ИЗОЛЯЦИИ
Запрещается подавать питание на устройства без БСНН с одной изоляцией с модуля внешнего питания AD 24 В БСНН блока управления Micrologic X (например, запрещается использовать один и тот же модуль источника питания AD 24 В БСНН для подачи питания на блок управления Micrologic X для Masterpact MTZ и Micrologic A/E/P/H для Masterpact NT/NW).
При несоблюдении данных инструкций система будет иметь базовую/ одинарную изоляцию.

丧失双重隔离
不得使用 Micrologic X 控制单元的 AD 外部 24 Vcc SELV 电源模块为单绝缘型非 SELV 设备供电（比如，不得使用同一 AD 24 Vcc SELV 电源模块为 Masterpact MTZ 的 Micrologic X 控制单元以及 Masterpact NT/NW 的 Micrologic A/E/P/H 供电）。
不遵照这些说明将导致基本/单绝缘系统。

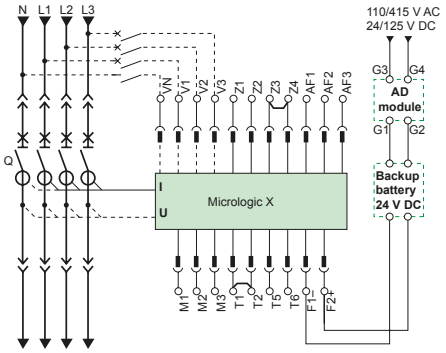

NOTICE / AVIS / AVISO / HINWEIS / AVVISO / AVISO / УВЕДОМЛЕНИЕ / 注意

HAZARD OF EQUIPMENT DAMAGE
Use the same AD 24 Vdc SELV power supply module to supply the Micrologic X control unit and the other ULP modules connected to the ULP port module.
Failure to follow these instructions can result in equipment damage.

RISQUE DE DOMMAGES MATÉRIELS
Utilisez le même module d'alimentation AD 24 Vcc TBTS pour alimenter l'unité de contrôle Micrologic X et les autres modules ULP raccordés sur le module port ULP.
Si ces directives ne sont pas respectées, cela peut entraîner des dommages matériels.

PELIGRO DE DAÑO AL EQUIPO
Utilice el mismo módulo de alimentación AD MBTS de 24 V CC para alimentar la unidad de control Micrologic X y los otros módulos ULP conectados al módulo de puerto ULP.
El incumplimiento de estas instrucciones puede causar daño al equipo.

GEFAHR EINER BESCHÄDIGUNG DES GERÄTS
Verwenden Sie dasselbe 24-Vcc-SELV-AD-Spannungsversorgungsmodul zur Speisung der Micologic X-Steuereinheit und der anderen mit dem ULP-Portmodul verbundenen ULP-Module.
Die Nichtbeachtung dieser Anweisungen kann Sachschäden zur Folge haben.

PERICOLO DI DANNEGGIAMENTO DELL'APPARECCHIATURA
Utilizzare lo stesso modulo di alimentazione 24 Vcc SELV AD per alimentare l'unità di controllo Micrologic X e altri moduli ULP connessi al modulo porta ULP.
Il mancato rispetto di queste istruzioni può provocare danni alle apparecchiature.

RISCO DE DANOS NO EQUIPAMENTO
Use o mesmo módulo de alimentação AD de 24 Vcc SELV para fornecer energia à unidade de controle Micrologic X e os outros módulos ULP conectados ao módulo da porta ULP.
A não observância destas instruções pode provocar danos no equipamento.

ОПАСНОСТЬ ПОВРЕЖДЕНИЯ ОБОРУДОВАНИЯ
Используйте один и тот же источник питания AD 24 В БСНН для подачи питания на блок питания Micrologic X и другие модули ULP, подключенные к модулю порта ULP.
Несоблюдение этих инструкций может привести к повреждению оборудования.

可能有设备损坏的风险
使用同一 AD 24 Vcc SELV 电源模块为 Micrologic X 控制单元以及连接到 ULP 端口模块的其他 ULP 模块供电。
不遵循上述说明可能导致设备损坏。

en Recommendations for use of AD external 24 Vdc SELV power supply modules:
- The same AD 24 Vdc SELV power supply module can be used to supply several Micrologic X control units.
- Use a separate 24 Vdc power supply to supply the MN/MX/XF voltage releases or the MCH gear motor.

fr Recommandations d'utilisation des modules d'alimentation externes AD 24 Vcc TBTS :
- Le même module d'alimentation AD 24 Vcc TBTS peut être utilisé pour alimenter plusieurs unités de contrôle Micrologic X.
- Utilisez une alimentation 24 Vcc séparée pour alimenter les déclencheurs voltmétriques MN/MX/XF ou le moto-réducteur MCH.

es Recomendaciones para el uso de módulos de alimentación externos AD MBTS de 24 V CC:
- Se puede utilizar el mismo módulo de alimentación AD MBTS de 24 V CC para alimentar varias unidades de control Micrologic X.
- Utilice una alimentación de 24 V CC independiente para alimentar las bobinas de disparo MN/MX/XF o el motorreductor MCH.

de Empfehlungen für die Verwendung externer 24-Vcc-SELV-AD-Spannungsversorgungsmodule:
- Ein einzelnes 24-Vcc-SELV-AD-Spannungsversorgungsmodul kann zur Speisung mehrerer Micrologic X-Steuereinheit eingesetzt werden.
- Verwenden Sie eine separate 24-Vcc-Spannungsversorgung zur Speisung der MN/MX/XF-Spannungsauslöser bzw. der MCH-Getriebemotoren.

it Raccomandazioni per l'uso di moduli di alimentazione 24 Vcc SELV AD esterni:
- È possibile utilizzare lo stesso modulo di alimentazione 24 Vcc SELV AD per alimentare diverse unità di controllo Micrologic X.
- Utilizzare un alimentatore da 24 Vcc separato per alimentare gli sganciatori voltmetrici MN/MX/XF o il motoriduttore MCH.

pt Recomendações para uso de módulos de alimentação AD externo de 24 Vcc SELV:
- O mesmo módulo de alimentação AD de 24 Vcc SELV pode ser usado para alimentar várias unidades de controle Micrologic X.
- Use uma fonte de energia de 24 Vcc para fornecer energia a liberações de tensão MN/MX/XF ou ao motor de engrenagem MCH.

ru Рекомендации по использованию внешних модулей источников питания AD 24 В БСНН
- Один и тот же модуль источника питания AD 24 В БСНН можно использовать для подачи питания на несколько блоков управления Micrologic X.
- Используйте отдельный источник питания 24 В для подачи питания на расцепители напряжения MN/MX/XF или мотор-редуктор MCH.

zh AD 外部 24 Vcc SELV 电源模块使用建议：
- 可以使用同一 AD 24 Vcc SELV 电源模块为多个 Micrologic X 控制单元供电。
- 使用独立的 24 Vcc 电源为 MN/MX/XF 线圈或 MCH 储能马达供电。

18.4 MN-MX-XF Voltage Releases / Déclencheurs voltmétriques MN-MX-XF / Bobinas de disparo MN-MX-XF / MN-MX-XF Spannungsauslöser / Sganciatori voltmetrici MN-MX-XF / Libertações de tensão MN-MX-XF / Расцепители напряжения MN-MX-XF / MN-MX-XF 线圈

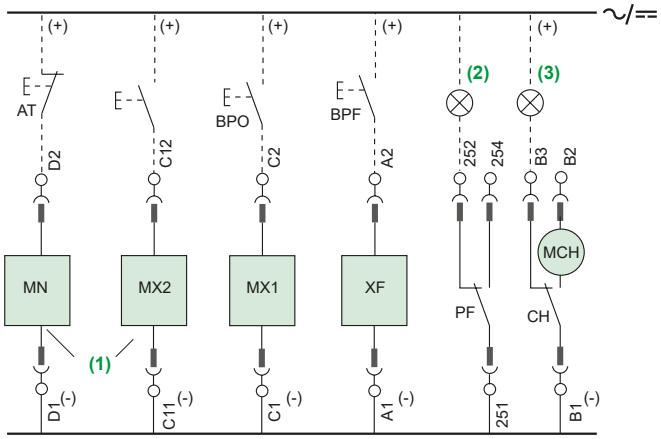

en (1) Possibility to add a second MX (MX2) or MN voltage release
(2) Ready to close
(3) Charged

fr (1) Ajout possible d'un deuxième déclencheur voltmétrique MX (MX2) ou MN
(2) Prêt à fermer
(3) Armé

es (1) Se puede añadir una segunda bobina de disparo MX (MX2) o MN
(2) Preparado para cerrar
(3) Cargado

de (1) Möglichkeit des Hinzufügens eines zweiten MX (MX2) oder MN-Spannungsauslösers
(2) Einschaltbereit
(3) Gespannt

it (1) Possibilità di aggiungere un secondo sganciatore voltmetrico MX (MX2) o MN
(2) Pronto alla chiusura
(3) Caricato

pt (1) Possibilidade de adicionar uma libertação de tensão MX (MX2) ou MN
(2) Pronto para fechar
(3) Carregado

ru (1) Возможность добавить второй расцепитель напряжения MX (MX2) или MN
(2) Готовность к включению
(3) Взведенное состояние

zh (1) 可再加一个 MX (MX2) 或 MN 线圈
(2) 准备合闸
(3) 储能

18.5 MN-MX-XF Communicating Voltage Releases with Diagnostic Function / Déclencheurs voltmétriques communicants MN-MX-XF avec fonction de diagnostic / Bobinas de disparo comunicantes MN-MX-XF con función diagnóstica / MN-MX-XF kommunikationsfähige Spannungsauslöser mit Diagnosefunktion / Sganciatori voltmetrici comunicanti MN-MX-XF con funzione diagnostica / Libertações de tensão de comunicação MN-MX-XF com função de diagnóstico / Расцепители напряжения MN-MX-XF с функциями диагностики / 带诊断功能的 MN-MX-XF 通信线圈

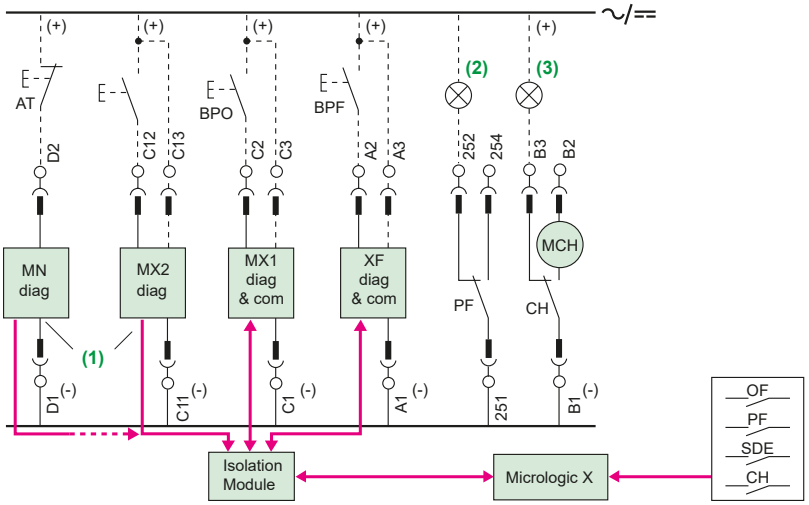

18.6 MN-MX-XF Communicating Voltage Releases with Diagnostic and Communication Functions / Déclencheurs voltmétriques communicants MN-MX-XF avec fonction de diagnostic et de communication / Bobinas de disparo comunicantes MN-MX-XF con funciones diagnóstica y de comunicación / MN-MX-XF kommunikationsfähige Spannungsauslöser mit Diagnose- und Kommunikationsfunktionen / Sganciatori voltmetrici comunicanti MN-MX-XF con funzioni di diagnostica e comunicazione / Libertações de tensão de comunicação MN-MX-XF com funções de diagnóstico ecomunicação / Расцепители напряжения MN-MX-XF с функциями связи и диагностики / 带诊断和通信功能的 MN-MX-XF 通信线圈

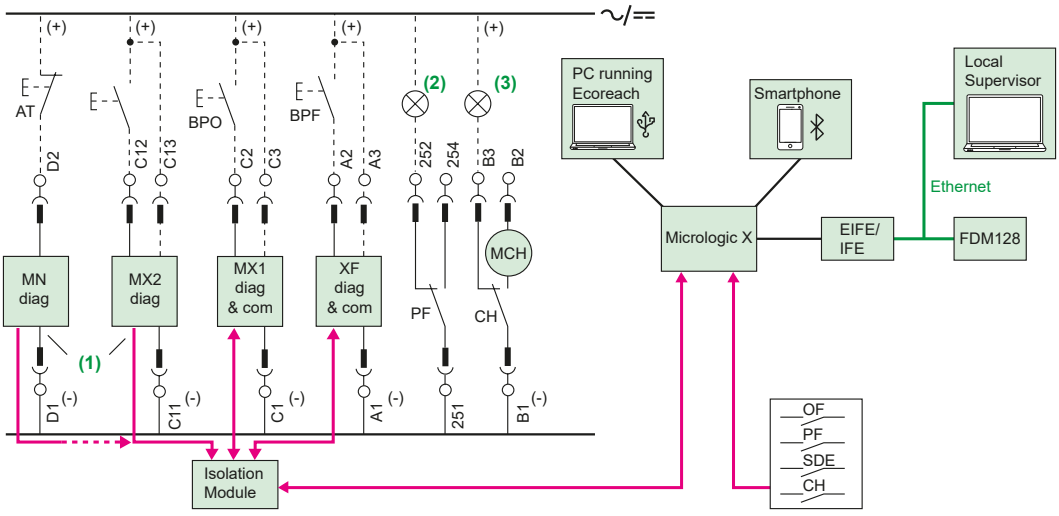

18.7 Voltage Measurement Inputs / Entrées de mesure de la tension / Entradas de medición de la tensión / Spannungsmesseingänge / Ingressi di misura tensione / Entradas de medição de tensão / Входы измерения напряжения / 电压测量输入

⚠ ⚠ DANGER / DANGER / PELIGRO / GEFAHR / PERICOLO / PERIGO / ОПАСНОСТЬ / 危险			
HAZARD OF ELECTRIC SHOCK, EXPLOSION OR ARC FLASH Do not install a VPS module on a network with a voltage above 600 V~. **Failure to follow these instructions will result in death or serious injury.**	**RISQUE D'ÉLECTROCUTION, D'EXPLOSION OU ÉCLAIR D'ARC ÉLECTRIQUE** L'installation du module VPS est interdite pour des réseaux avec une tension supérieure à 600 V~. **Si ces directives ne sont pas respectées, cela entraînera la mort ou des blessures graves.**	**PELIGRO DE DESCARGA ELÉCTRICA, EXPLOSIÓN O DESTELLO POR ARQUEO** No instale un módulo VPS en una red con una tensión superior a 600 V~. **El incumplimiento de estas instrucciones provocará lesiones graves o incluso la muerte.**	**GEFAHR VON ELEKTRISCHEM SCHLAG, EXPLOSION ODER LICHTBOGEN** Installieren Sie ein VPS-Modul nicht in einem Netzwerk mit einer Spannung über 600 V~. **Die Nichtbeachtung dieser Anweisungen führt zu Tod oder schweren Verletzungen.**
RISCHIO DI FOLGORAZIONE, ESPLOSIONI O ARCO ELETTRICO Non installare il modulo VPS in una rete con una tensione oltre 600 V~. **Il mancato rispetto di queste istruzioni provocherà morte o gravi infortuni.**	**RISCO DE ELECTROCUSSÃO, DE EXPLOSÃO, OU DE ARCO ELÉCTRICO** Não instale um módulo VPS numa rede com tensão superior a 600 V~. **A não observância destas instruções resultará em morte, ou ferimentos graves.**	**Опасность поражения электрическим током, взрыва или возникновения дуги** Не устанавливайте модуль VPS в сети, напряжение в которой превышает 600 В~. **Несоблюдение этих инструкций приведет к смерти или серьезной травме.**	电击、爆炸或弧闪的危险 勿将 VPS 模块安装到电压超过 600 V~ 的 VPS 模块上。 不遵循上述说明将导致人员伤亡。

Internal Voltage Measurement Inputs / Prises de tension internes / Entradas de medición de la tensión interna / Interne Spannungsmesseingänge / Ingressi di misurazione tensione interna / Entradas de medição da tensão interna / Входы измерения внутреннего напряжения / 内部电压测量输入

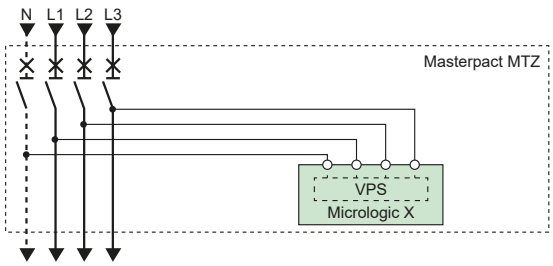

Optional PTE External Voltage Measurement Inputs / Option prise de tension externe PTE / Entradas de medición de tensión externa PTE opcionales / Externe PTE-Spannungsmesseingänge (Optional) / Ingressi di misurazione tensione esterna PTE opzionali / Entradas de medição de tensão do PTE externo opcionais / Дополнительные входы измерения внешнего напряжения PTE / 可选的 PTE 外部电压测量输入

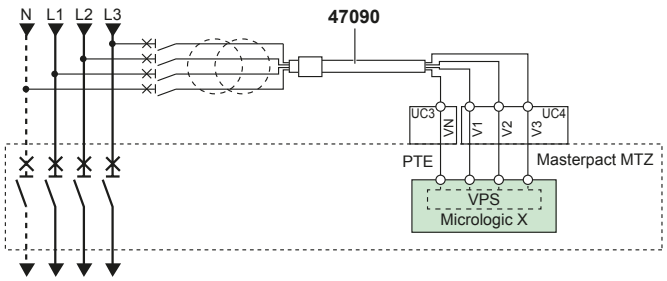

- **en** PTE connected on the top side terminals of circuit breaker with the cable 47090 delivered with the PTE option.
- **fr** PTE connectée sur les bornes supérieures du disjoncteur avec le câble 47090 livré avec l'option PTE.
- **es** PTE conectado en los bornes de la parte superior del interruptor automático con el cable 47090 suministrado con la opción PTE.
- **de** PTE-Anschluss an die Klemmen an der Oberseite des Leistungsschalters mithilfe des mit der PTE-Option mitgelieferten Kabels 47090
- **it** PTE collegati sui terminali superiori dell'interruttore con il 47090 fornito con il PTE opzionale.
- **pt** PTE conectado nos terminais superiores do disjuntor com o cabo 47090 fornecido com a opção PTE.
- **ru** PTE, подключенные к верхним клеммам автоматического выключателя с помощью кабеля 47090, поставляемого с PTE (опция).
- **zh** 籍由 PTE 选项随附的电缆 47090 连接在断路器顶侧端子上的 PTE。

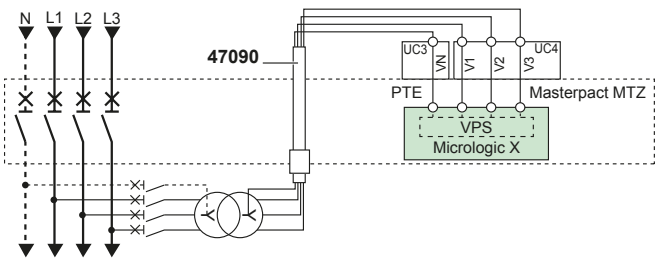

- **en** PTE connected on the bottom side terminals of circuit breaker with the cable 47090 delivered with the PTE option.
- **fr** PTE connectée sur les bornes inférieures du disjoncteur avec le câble 47090 livré avec l'option PTE.
- **es** PTE conectado en los bornes de la parte inferior del interruptor automático con el cable 47090 suministrado con la opción PTE.
- **de** PTE-Anschluss an die Klemmen an der Unterseite des Leistungsschalters mithilfe des mit der PTE-Option mitgelieferten Kabels 47090
- **it** PTE collegati sui terminali inferiori dell'interruttore con il 47090 fornito con il PTE opzionale.
- **pt** PTE conectado nos terminais inferiores do disjuntor com o cabo 47090 fornecido com a opção PTE.
- **ru** PTE, подключенные к нижним клеммам автоматического выключателя с помощью кабеля 47090, поставляемого с PTE (опция).
- **zh** 籍由 PTE 选项随附的电缆 47090 连接在断路器底侧端子上的 PTE。

18.8 ENCT External Sensor for Neutral and Residual Earth Fault Protection / Transformateur de courant ENCT pour la protection contre les défauts de terre neutre et résiduelle / Sensor externo para la protección de defecto a tierra residual y neutra ENCT / ENCT Externer Sensor für Erdschlussschutz bei neutralem und Reststrom / Sensore esterno ENCT per protezione da guasti di terra residua e neutra / ENCT Sensor externo para proteção contra falhas de terra neutras e residuais / Внешний датчик защиты нуля и от остаточного тока замыкания на землю ENCT / ENCT 中性线和残余接地故障保护外部互感器

NOTICE / AVIS / AVISO / HINWEIS / AVVISO / AVISO / УВЕДОМЛЕНИЕ / 注意

HAZARD OF NUISANCE TRIPPING Connect the cable supplied with the ENCT to the circuit breaker as follows: ● Connect the black wire to terminal T1. ● Connect the brown wire to terminal T2. **Failure to follow these instructions can result in equipment damage.**	**RISQUE DE DECLENCHEMENT INTEMPESTIF** Raccordez le câble livré avec le ENCT au disjoncteur comme indiqué : ● raccordez le fil noir sur la borne T1 ● raccordez le fil marron sur la borne T2 **Si ces directives ne sont pas respectées, cela peut entraîner des dommages matériels.**	**RIESGO DE DISPARO IMPREVISTO** Conecte el cable suministrado con el ENCT al interruptor automático del modo siguiente: ● Conecte el cable negro al terminal T1 ● Conecte el cable marrón al terminal T2 **El incumplimiento de estas instrucciones puede causar daño al equipo.**	**GEFAHR VON FEHLAUSLÖSUNGEN** Verbinden Sie das mit dem ENCT gelieferte Kabel mit dem Leistungsschalter wie folgt: ● Verbinden Sie das schwarze Kabel mit Klemme T1 ● Verbinden Sie das braune Kabel mit Klemme T2 **Die Nichtbeachtung dieser Anweisungen kann Sachschäden zur Folge haben.**
RISCHIO DI DISTURBI Collegare il cavo fornito con ENCT all'interruttore come segue: ● Collegare il cavo nero al terminale T1 ● Collegare il cavo marrone al terminale T2 **Il mancato rispetto di queste istruzioni può provocare danni alle apparecchiature.**	**RISCO DE DISPARO INDEVIDO** Ligue o cabo LV848906SP fornecido com o TCE entre o TCE e o disjuntor do seguinte modo: ● Ligue o fio preto ao terminal T1 ● Ligue o fio castanho ao terminal T2 **A não observância destas instruções pode provocar danos no equipamento.**	**РИСК ЛОЖНЫХ СРАБАТЫВАНИЙ** **Соедините ТСЕ** Подключите кабель, который поставляется вместе с ENCT, к автоматическому выключателю следующим образом: ● подключите черный провод к клемме T1 ● подключите коричневый провод к клемме T2 **Несоблюдение этих инструкций может привести к повреждению оборудования.**	跳闸风险 按如下方式将随同 ENCT 提供的电缆连接至断路器： ● 黑线连接端子 T1。 ● 棕线连接端子 T2。 不遵循上述说明可能导致设备损坏。

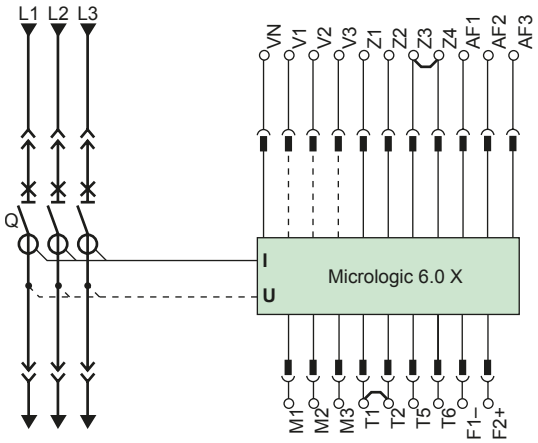

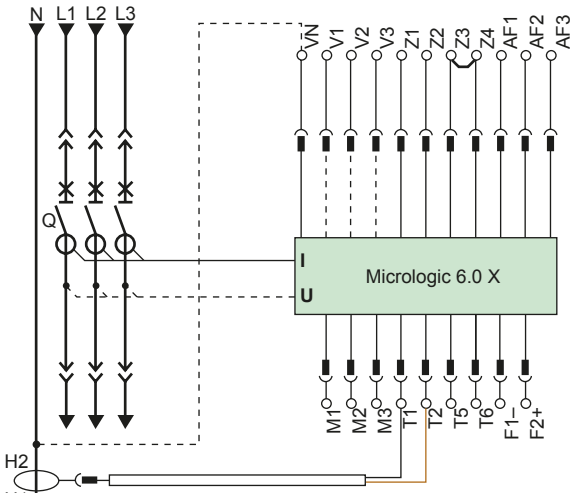

en Circuit breaker has factory-installed jumper connecting the T1 and T2 terminals.
- For three-phase, three-wire systems, leave the jumper wire installed.
- For three-phase, four-wire systems, remove the jumper wire before installing ENCT neutral current transformer.

fr Le disjoncteur a un cavalier installé en usine entre les bornes T1 et T2.
- Pour un système triphasé à trois fils, laissez ce cavalier en place.
- Pour un système triphasé à quatre fils, retirez le cavalier avant d'installer le transformateur de courant neutre ENCT.

es El interruptor automático dispone de un puente instalado de fábrica que conecta los terminales T1 y T2.
- Para sistemas trifásicos de tres conductores, deje el conductor del puente instalado.
- Para sistemas trifásicos de cuatro conductores, retire el conductor del puente antes de instalar el transformador de corriente en el neutro ENCT.

de Der Leistungsschalter ist werksseitig mit einem Jumper ausgestattet, der die Klemmenleisten T1 und T2 verbindet.
- Bei dreiphasigen Dreileitersystemen muss der Jumperdraht installiert bleiben.
- Bei dreiphasigen, Vierleitersystemen muss der Jumperdraht entfernt werden, bevor der neutrale Strom wandler ENCT installiert wird.

it L'interruttore è fornito di ponticello installato in fabbrica che collega i terminali T1 e T2.
- Per sistema trifase e tre cavi, lasciare il ponticello installato.
- Per sistemi trifase e quattro cavi, rimuovere il ponticello prima di installare il trasformatore di corrente neutra ENCT.

pt O disjuntor tem uma ligação direta instalada de origem que liga os terminais T1 e T2.
- Para os sistemas trifásicos de três cabos, deixe o fio de ligação direta instalado.
- Para os sistemas trifásicos de quatro cabos, retire o fio de ligação direta antes de instalar o transformador de corrente ao neutro ENCT.

ru В автоматическом выключателе на заводе установлена перемычка между клеммами T1 и T2.
- Для трехфазных трехпроводных систем оставьте перемычку на месте.
- Для трехфазных четырехпроводных систем перед установкой трансформатора тока нейтрали ENCT снимите перемычку.

zh 断路器具有出厂时安装的连接 T1 和 T2 端子的跳线。
- 对于三相三线系统，保持该跳线处于其安装时的原状。
- 对于三相四线系统，在安装 ENCT 中性线电流互感器之前，应拆下该跳线。

18.9 SGR External Sensor for Source Ground Return Protection / Transformateur de courant SGR pour la protection de terre de type Source Ground Return / Sensor externo para protección de tierra Source Ground Return (SGR) / SGR Externer Sensor für Rückfehlerstromschutz / TA esterno SGR per protezione ritorno terra di origine / Proteção de falta a terra (SGR) com retorno à fonte do sensor externo / Внешний датчик SGR для защиты от замыканий на землю типа возврат тока через заземлитель / SGR 电源接地回路保护外部互感器

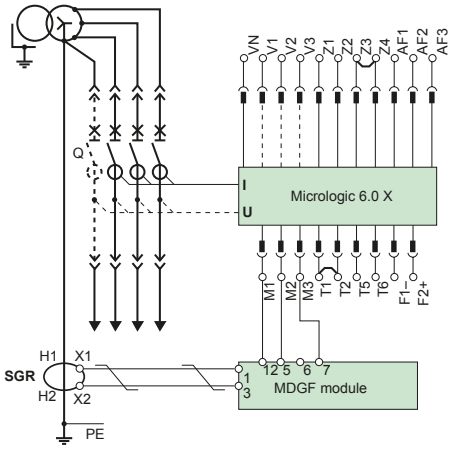

18.10 Rectangular Sensor for Earth-Leakage Protection / Cadre sommateur pour la protection contre les fuites de terre / Trafo rectangular para protección de fuga a tierra / Rechteckiger Sensor für Erdschlussschutz / Toroide rettangolare per protezione dispersione di terra / Sensor retangular para proteção diferencial / Суммирующая рамка дифференциальной защиты для защиты от тока утечки на землю / 接地漏电保护矩形互感器

⚠ WARNING / AVERTISSEMENT / ADVERTENCIA / WARNUNG / AVVERTIMENTO / ATENÇÃO / ПРЕДУПРЕЖДЕНИЕ / 警告

EARTH-LEAKAGE PROTECTION LOSS Never use Masterpact MTZ2/MTZ3 with embedded Micrologic 7.0 X control unit without LV833573SP or LV833574SP connected rectangular sensor for earth-leakage protection. **Failure to follow these instructions can result in death, serious injury, or equipment damage.**	**PERTE DE LA PROTECTION DIFFERENTIELLE** Un Masterpact MTZ2/MTZ3 avec unité de contrôle Micrologic 7.0 X doit toujours être raccordé à un cadre sommateur pour protection différentielle LV833573SP ou LV833574SP. **Si ces directives ne sont pas respectées, cela peut entraîner la mort ou des blessures graves ou des dommages matériels.**	**PÉRDIDA DE LA PROTECCIÓN DIFERENCIAL** No utilice nunca Masterpact MTZ2/MTZ3 con la unidad de control integrada Micrologic 7.0 X sin el trafo rectangular conectado LV833573SP o LV833574SP para obtener la protección del diferencial. **El incumplimiento de estas instrucciones puede causar la muerte, lesiones serias o daño al equipo.**	**VERLUST DES FEHLERSTROMSCHUTZES** Der Masterpact MTZ2/MTZ3 mit integrierter Micrologic 7.0 X-Steuereinheit darf keinesfalls ohne Anschluss eines rechteckigen Sensors LV833573SP oder LV833574SP zum Fehlerstromschutz verwendet werden. **Die Nichtbeachtung dieser Anweisungen kann Tod, schwere Verletzungen oder Sachschäden zur Folge haben.**
PERDITA DI PROTEZIONE DA DISPERSIONE DI TERRA Non utilizzare mai Masterpact MTZ2/MTZ3 con unità di controllo Micrologic 7.0 X integrata senza toroide rettangolare LV833573SP o LV833574SP connesso per protezione da dispersione di terra. **Il mancato rispetto di queste istruzioni può provocare morte, gravi infortuni o danni alle apparecchiature.**	**PERDA DE PROTEÇÃO DIFERENCIAL** Nunca use Masterpact MTZ2/MTZ3 com a unidade de controle Micrologic 7.0 X sem o sensor retangular conectado LV833573SP ou LV833574S para proteção diferencial. **A não observância destas instruções pode provocar a morte, ferimentos graves, ou danos no equipamento.**	**ПОТЕРЯ ЗАЩИТЫ ОТ УТЕЧКИ НА ЗЕМЛЮ** Запрещается использовать Masterpact MTZ1 со встроенным блоком управления Micrologic 7.0 X без подключенного к LV833573SP или LV833574S прямоугольного датчика для защиты от утечки на землю. **Несоблюдение этих инструкций может привести к смерти, серьезной травме или повреждению оборудования.**	丧失接地泄漏保护功能 切勿在未使用矩形互感器（连接到 LV833573SP 或 LV833574S）进行接地泄漏保护的情况下，将 Masterpact MTZ2/MTZ3 与嵌入式 Micrologic 7.0 X 控制单元一起使用。 不遵循上述说明可能导致人员伤亡或设备损坏。

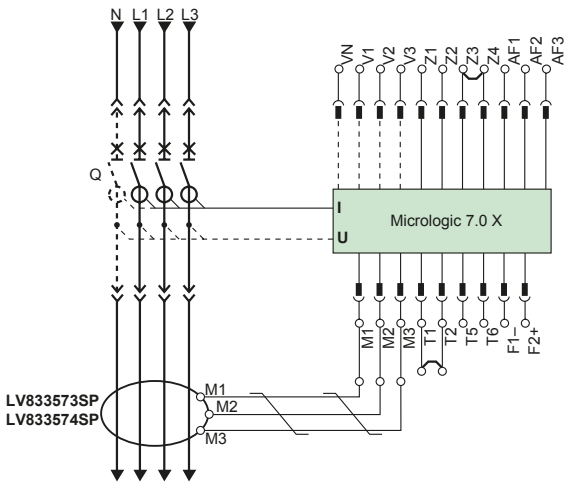

19 Chassis Removal / Démontage du châssis / Extracción del chasis / Entfernen der Einschubkassette / Rimozione telaio / Remoção do chassis / Демонтаж шасси / 抽架拆卸

⚠ ⚠ DANGER / DANGER / PELIGRO / GEFAHR / PERICOLO / PERIGO / ОПАСНОСТЬ / 危险

HAZARD OF ELECTRIC SHOCK, EXPLOSION OR ARC FLASH ● Apply appropriate personal protective equipment (PPE) and follow safe electrical work practices. See NFPA 70E, CSA Z462, NOM 029-STPS or local equivalent. ● This equipment must only be installed and serviced by qualified electrical personnel. **Failure to follow these instructions will result in death or serious injury.**	**RISQUE D'ÉLECTROCUTION, D'EXPLOSION OU ÉCLAIR D'ARC ÉLECTRIQUE** ● Portez un équipement de protection individuel (EPI) adapté et respectez les consignes de sécurité électrique courantes. Reportez-vous aux normes NFPA 70E, CSA Z462, NOM 029-STPS ou aux codes locaux en vigueur. ● Seul un personnel qualifié doit effectuer l'installation et l'entretien de cet équipement. **Si ces directives ne sont pas respectées, cela entraînera la mort ou des blessures graves.**	**PELIGRO DE DESCARGA ELÉCTRICA, EXPLOSIÓN O DESTELLO POR ARQUEO** ● Utilice equipo de protección personal (EPP) apropiado y siga las prácticas de seguridad eléctricos establecidas. Consulte las normas NFPA 70E, CSA Z462, NOM-029-STPS u otros códigos locales correspondientes. ● Solamente el personal eléctrico calificado deberá instalar y prestar servicio de mantenimiento a este equipo. **El incumplimiento de estas instrucciones provocará lesiones graves o incluso la muerte.**	**GEFAHR VON ELEKTRISCHEM SCHLAG, EXPLOSION ODER LICHTBOGEN** ● ragen Sie persönliche Schutzausrüstung (PSA) und befolgen Sie sichere Verfahren im Umgang mit Elektrogeräten. Siehe NFPA 70E, CSA Z462, NOM 029-STPS oder lokale Entsprechung. ● Diese Geräte dürfen nur von qualifizierten Elektrikern installiert und gewartet werden. **Die Nichtbeachtung dieser Anweisungen führt zu Tod oder schweren Verletzungen.**
RISCHIO DI FOLGORAZIONE, ESPLOSIONI O ARCO ELETTRICO ● Utilizzare dispositivi di protezione individuale (DPI) idonei e adottare misure di sicurezza adeguate per lavori elettrici. Vedere le normative NFPA 70E, CSA Z462, NOM 029-STPS o le norme equivalenti nel paese di installazione. ● Installazione e manutenzione di questa apparecchiatura si devono affidare solo ad elettricisti qualificati. **Il mancato rispetto di queste istruzioni provocherà morte o gravi infortuni.**	**RISCO DE ELECTROCUSSÃO, DE EXPLOSÃO, OU DE ARCO ELÉCTRICO** ● Utilize equipamento de protecção pessoal (PPE) e siga os métodos de segurança eléctrica. Consulte NFPA 70E, CSA Z462, NOM 029-STPS ou o equivalente local. ● A instalação e manutenção deste equipamento só devem ser efectuadas por electricistas qualificados. **A não observância destas instruções resultará em morte, ou ferimentos graves.**	**Опасность поражения электрическим током, взрыва или возникновения дуги** ● Используйте подходящие средства индивидуальной защиты (СИЗ) и соблюдайте технику безопасности при электротехнических работах. См. NFPA 70E, CSA Z462, NOM 029-STPS или местный эквивалентный стандарт. ● Данное оборудование могут устанавливать и обслуживать только квалифицированные электрики. **Несоблюдение этих инструкций приведет к смерти или серьезной травме.**	电击、爆炸或弧闪的危险 ● 采用适当的个人防护设备 (PPE) 并遵循电气作业安全守则。请参阅 NFPA 70E, CSA Z462, NOM 029-STPS 或当地对应的标准。 ● 只有具备相应资质的电气人员才能安装和维修该设备。 不遵循上述说明将导致人员伤亡。

en
1. Turn off all power supplying this equipment before working on or inside equipment.
2. Use a properly-rated voltage sensing device to confirm power is off.
3. Turn off or trip circuit breaker before removal. Make sure the circuit breaker is in the open (O) position and spring is discharged.
4. Remove circuit breaker from chassis.
5. Remove chassis in reverse order of installation.

fr
1. Débranchez toutes les sources d'alimentation de cet équipement avant d'effectuer toute opération interne ou externe sur celui-ci.
2. Utilisez toujours un dispositif de détection de tension ayant une valeur nominale appropriée pour vous assurer que l'alimentation est coupée.
3. Fermez ou déclenchez le disjoncteur avant le retrait. Vérifiez que le disjoncteur est en position ouverte (O) et que le ressort d'accumulation d'énergie est déchargé.
4. Retirez le disjoncteur du châssis.
5. Démontez le châssis dans l'ordre inverse de l'installation.

es
1. Desconecte toda la alimentación suministrada a este equipo antes de trabajar con él.
2. Utilice un dispositivo de detección de tensión de capacidad adecuada para confirmar la ausencia de alimentación eléctrica.
3. Apague o dispare el interruptor automático antes de la extracción. Asegúrese de que el interruptor automático esté en posición abierta (O) y que el muelle resorte esté descargado.
4. Extraiga el interruptor automático del chasis.
5. Extraiga el chasis en el orden inverso al de la instalación.

de
1. Schalten Sie die gesamte Stromversorgung für diese Anlage ab, bevor Sie mit der Arbeit an oder in der Anlage beginnen.
2. Verwenden Sie einen Spannungsfühler mit der korrekten Bemessungsspannung, um sicherzustellen, dass keine Spannung anliegt.
3. Schalten oder lösen Sie den Leistungsschalter aus, bevor Sie ihn entfernen. Stellen Sie sicher, dass sich der Leistungsschalter in der offenen (O) Position befindet und die Feder nicht gespannt ist.
4. Entfernen Sie den Leistungsschalter von der Einschubkassette.
5. Entfernen Sie die Einschubkassette in umgekehrter Reihenfolge der Installation.

it
1. Disattivare tutte le alimentazioni di questa apparecchiatura prima di lavorare sulla o all'interno dell'apparecchiatura.
2. Utilizzare un dispositivo di rilevamento di tensione di capacità adeguata per confermare l'assenza di alimentazione.
3. Disattivare o sganciare l'interruttore prima della rimozione. Verificare che l'interruttore sia in posizione aperta (O) e che la molla sia scarica.
4. Rimuovere l'interruttore dal telaio.
5. Rimuovere il telaio nell'ordine inverso di installazione.

pt
1. Desligue completamente a alimentação de energia para este equipamento antes de trabalhar no equipamento ou dentro do mesmo.
2. Utilize um dispositivo de detecção de tensão com a calibragem necessária para confirmar se a alimentação está desligada.
3. Desligue ou dispare o disjuntor antes de o remover. Certifique-se de que o disjuntor está na posição aberta (O) e que a mola está descarregada.
4. Retire o disjuntor do chassis.
5. Retire o chassis pela ordem inversa de instalação.

ru
1. При работе с данным оборудованием или внутри него необходимо выключить все источники питания.
2. Используйте обладающий соответствующими характеристиками датчик напряжения для проверки отключения электропитания.
3. Перед началом демонтажа выключите или разомкните автоматический выключатель. Убедитесь, что автоматический выключатель находится в разомкнутом (O) положении и что пружина не взведена.
4. Снимите автоматический выключатель с шасси.
5. Снимите шасси, выполнив действия по установке в обратном порядке.

zh
1. 在设备上或其内部工作之前，关闭为该设备供电的所有电源。
2. 使用适当的额定电压传感设备确认电源已关闭。
3. 拆卸之前，关闭断路器或使其脱扣。确保断路器处于分闸 (O) 位置，并且弹簧已释能。
4. 从抽架中拆除 断路器。
5. 按与安装相反的步骤拆卸 抽架。

20 Dielectric Test / Test diélectrique / Prueba dieléctrica / Dielektrizitätsprüfung / Test dielettrico / Teste dielétrico / Испытание на диэлектрическую прочность / 介电测试

en Before conducting any dielectric tests, move the VPS module (if included in the Micrologic X control unit) to the disconnected position and unplug any cables from the mini USB port on the front face of the Micrologic X control unit.

fr Avant tout test diélectrique, placez le module VPS (si inclus dans l'unité de contrôle Micrologic X) en position déconnectée et vérifiez qu'aucun câble n'est branché sur le port mini-USB à l'avant de l'unité de contrôle Micrologic X.

es Antes de realizar ninguna prueba dieléctrica, pase el módulo VPS a la posición desenchufado (si está incluido en la unidad de control Micrologic X) y desconecte todos los cables del puerto mini USB en la parte frontal de la unidad de control Micrologic X.

de Vor der Durchführung von Dielektrizitätsprüfungen müssen Sie das VPS-Modul (falls im Micrologic X Auslösesystem inbegriffen) in die Trennstellung bewegen und alle Kabel vom mini-USB-Port an der Vorderseite des Micrologic X Auslösesystems abtrennen.

it Prima di effettuare qualsiasi test dielettrico, spostare il modulo VPS (se incluso nell'unità di controllo Micrologic X) nella posizione scollegato e staccare eventuali cavi dalla porta mini USB anteriore dell'unità di controllo Micrologic X.

pt Antes de realizar qualquer teste dielétrico, mova o módulo VPS (se estiver incluído na Unidade de controle Micrologic X) para a posição desconectado e desconecte qualquer cabo da porta mini USB na face frontal da Unidade de controle Micrologic X.

ru Перед проведением каких-либо испытаний на диэлектрическую прочность переместите модуль VPS (если он входит в блок управления Micrologic X) в отсоединенное положение и отключите все кабели от порта mini-USB на передней панели блока управления Micrologic X.

zh 开展任何介电测试之前，先将 VPS 模块（如果 Micrologic X 制单元中包含）移动到退出位置，然后拔下 Micrologic X 控制单元正面 Mini USB 端口上的一切电缆。

⚠ CAUTION / ATTENTION / ATENCIÓN / VORSICHT / ATTENZIONE / CUIDADO / ВНИМАНИЕ / 小心

DETERIORATION OF VPS MODULE

Disconnect the VPS module by pulling it out to the disconnected position before running a dielectric test on the equipment.

Failure to follow these instructions can result in injury or equipment damage.

DÉTERIORATION DU MODULE VPS

Déconnectez le module VPS jusqu'à ce qu'il soit en butée, avant un test diélectrique de l'équipement.

Si ces directives ne sont pas respectées, cela peut entraîner des blessures ou des dommages matériels.

DETERIORO DEL MÓDULO VPS

Desconecte el módulo VPS tirando de él hasta la posición de desconexión antes de realizar la prueba dieléctrica en el equipo.

El incumplimiento de estas instrucciones puede causar lesiones o daño al equipo.

VERSCHLECHTERUNG DES VPS-MODULS

Trennen Sie das VPS-Modul von der Anlage, indem Sie es in die Trennstellung ziehen, bevor Sie eine dielektrische Prüfung der Anlage vornehmen.

Die Nichtbeachtung dieser Anweisungen kann Verletzungen oder Sachschäden zur Folge haben.

DETERIORAMENTO DEL MODULO VPS

Scollegare il modulo VPS portandolo in posizione estratta prima di eseguire un test dielettrico sull'apparecchiatura.

Il mancato rispetto di queste istruzioni può provocare infortuni o danni alle apparecchiature.

DETERIORAÇÃO DO MÓDULO VPS

Desligue o módulo VPS puxando-o para fora da posição desligada antes de efectuar um teste dieléctrico no equipamento.

A não observância destas instruções pode provocar ferimentos pessoais, ou danos no equipamento.

УХУДШЕНИЕ ХАРАКТЕРИСТИК МОДУЛЯ VPS

Отсоедините модуль VPS, передвинув его в выкаченное (отсоединенное) положение, до начала испытания диэлектрических свойств оборудования.

Несоблюдение этих инструкций может привести к травме или повреждению оборудования.

VPS 模块退化

在对设备运行绝缘测试前，将 VPS 模块拉出到退出位置以断开 VPS 模块的连接。

不遵循上述说明可能导致人身伤害或设备损坏。

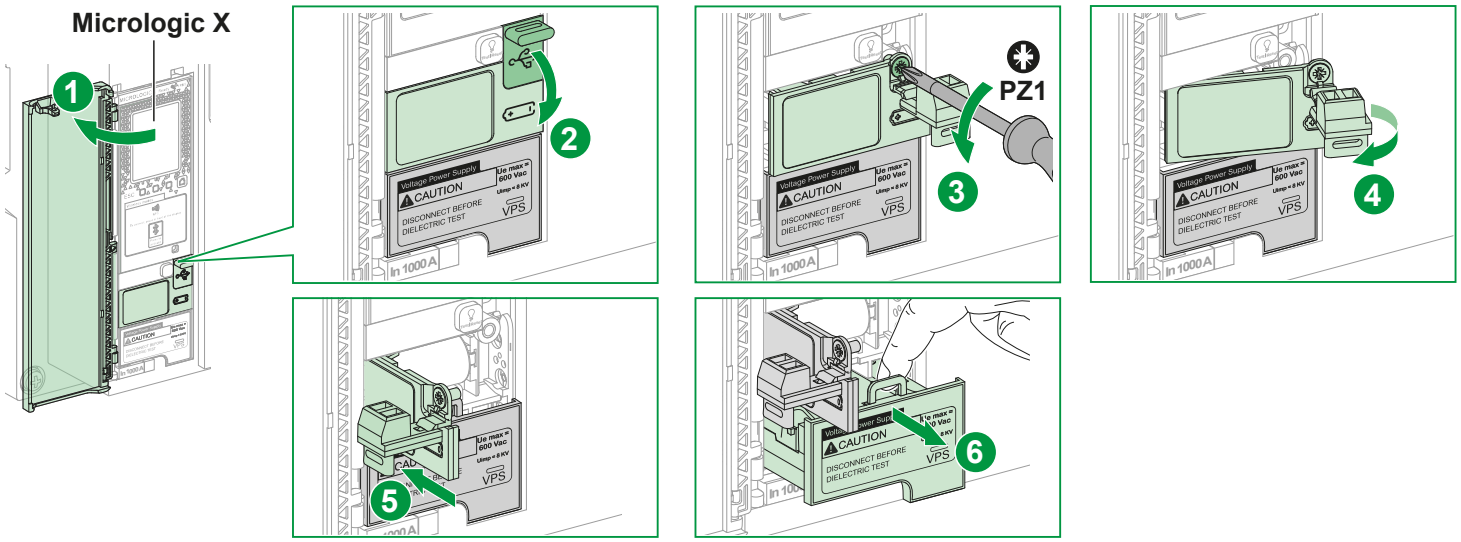

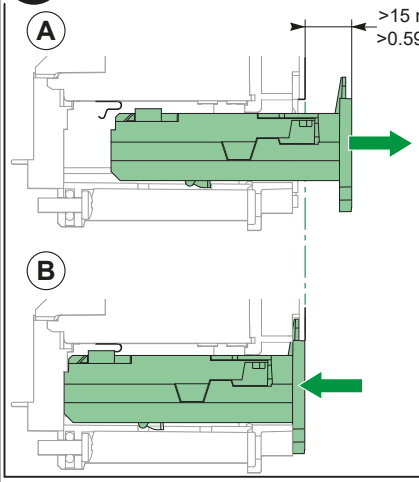

en The dielectric test must be run with the VPS module pulled out to the disconnected position (Diagram A). When the dielectric test has been run, reconnect the VPS module by pushing it fully into its housing (Diagram B).

fr Le test diélectrique doit être effectué avec le module VPS deconnecté et en butée (schéma A). Une fois le test diélectrique effectué, remettez en place le module VPS en le poussant au fond de son logement (schéma B).

es Para ejecutar la prueba dieléctrica es necesario que el módulo VPS esté en la posición de desconexión (diagrama A). Una vez que se haya ejecutado la prueba dieléctrica, vuelva a conectar el módulo VPS insertándolo completamente en su alojamiento (diagrama B).

de Die dielektrische Prüfung darf nur erfolgen, wenn sich das VPS-Modul in der Trennstellung befindet (Abbildung A). Verbinden Sie das VPS-Modul nach der dielektrischen Prüfung wieder, indem Sie es komplett in das Gehäuse schieben (Abbildung B).

it Il test dielettrico deve essere eseguito con il modulo VPS portato nella posizione estratta (Schema A). Dopo aver eseguito il test dielettrico, ricollegare il modulo VPS spingendolo a fondo nell'alloggiamento (Schema B).

pt O teste dieléctrico deve ser efectuado com o módulo VPS retirado da posição desligada (Diagrama A). Depois de o teste dieléctrico ser efectuado, volte a ligar o módulo VPS puxando-o totalmente para dentro da caixa (Diagrama B).

ru Диэлектрическое испытание обязательно выполняйте, когда модуль VPS находится в выкаченном (отсоединенном) положении (схема A). По завершении испытания диэлектрических свойств повторно присоедините модуль VPS, полностью вкатив его в корпус (схема B).

zh 必须在 VPS 模块被拉出到退出位置的情况下运行绝缘测试（图 A）。
在运行绝缘测试后，将 VPS 模块完全推入它的外壳以重新连接 VPS 模块（图 B）。

21 Micrologic X Setting / Réglage du Micrologic X / Configuración de Micrologic X / Einstellung von Micrologic X / Impostazione Micrologic X / Definição Micrologic X / Настройка Micrologic X / Micrologic X 设置

21.1 Micrologic X Commissioning / Mise en service du Micrologic X / Puesta en marcha de Micrologic X / Inbetriebnahme von Micrologic X / Messa in servizio di Micrologic X / Colocação em funcionamento do Micrologic X / Ввод в эксплуатацию блока Micrologic X / Micrologic X 调试

NOTICE / AVIS / AVISO / HINWEIS / AVVISO / AVISO / УВЕДОМЛЕНИЕ / 注意

HAZARD OF UNINTENDED OPERATION

- The device must only be configured and set by qualified personnel, using the results of the installation protection system study.
- During commissioning of the installation and following any modification, check that the Micrologic X configuration and protection function settings are consistent with the results of this study.
- Micrologic X protection functions are set by default to the minimum value, except the long-time protection function, set by default to the maximum value.

Failure to follow these instructions can result in equipment damage.

RISQUE DE FONCTIONNEMENT IMPREVU

- L'équipement doit être configuré et réglé uniquement par un personnel qualifié, à partir des résultats de l'étude du système de protection de l'installation.
- Lors de la mise en service de l'installation et après toute modification, contrôlez que la configuration et les réglages des fonctions de protection du Micrologic X sont cohérents avec les résultats de cette étude.
- Les fonctions de protection du Micrologic X sont réglées par défaut au minimum, sauf la fonction de protection long retard, réglée par défaut au maximum.

Si ces directives ne sont pas respectées, cela peut entraîner des dommages matériels.

RIESGO DE FUNCIONAMIENTO IMPREVISTO

- Sólo personal cualificado debe ser el encargado de configurar y preparar el aparato, usando los resultados del estudio del sistema de protección de la instalación.
- Durante la puesta en marcha de la instalación y después de cualquier modificación, compruebe que la configuración de Micrologic X y los ajustes de las funciones de protección sean acordes a los resultados de este estudio.
- Las funciones de protección de Micrologic X toman los valores mínimos de forma predeterminada, excepto la función de protección de larga duración, que toma el valor máximo de forma predeterminada.

El incumplimiento de estas instrucciones puede causar daño al equipo.

GEFAHR DES UNBEABSICHTIGTEN GERÄTEBETRIEBS

- Das Gerät darf nur von qualifiziertem Personal konfiguriert und eingestellt werden, unter Verwendung der Ergebnisse der Untersuchung zum Systemschutz bei Installationen.
- Bei Inbetriebnahme der Installation und nach jeglicher Änderung, müssen Sie sicherstellen, dass die Konfiguration und Schutzfunktionseinstellungen von Micrologic X mit den Ergebnissen dieser Untersuchung übereinstimmen.
- Die Schutzfunktionen von Micrologic X sind standardmäßig auf den Minimalwert eingestellt, außer der Langzeitschutzfunktion, die standardmäßig auf den Maximalwert eingestellt ist.

Die Nichtbeachtung dieser Anweisungen kann Sachschäden zur Folge haben.

RISCHIO DI FUNZIONAMENTO IMPREVISTO

- Il dispositivo deve essere solo configurato e impostato da personale qualificato, utilizzando i risultati dello studio del sistema di protezione di installazione.
- Durante la messa in servizio dell'installazione e a seguito di qualsiasi modifica, controllare che la configurazione di Micrologic X e le impostazioni della funzione di protezione siano coerenti con i risultati di tale studio.
- Le funzioni di protezione Micrologic X sono configurate per impostazione predefinita al valore minimo, tranne la funzione di protezione di lungo periodo, configurata per impostazione predefinita al valore massimo.

Il mancato rispetto di queste istruzioni può provocare danni alle apparecchiature.

RISCO DE FUNCIONAMENTO ACIDENTAL

- O dispositivo deve ser apenas configurado e definido por pessoal qualificado, utilizando os resultados do estudo do sistema de proteção da instalação.
- Durante a colocação em funcionamento da instalação e após qualquer modificação, verifique se a configuração do Micrologic X e as definições da função de proteção são consistentes com os resultados deste estudo.
- As funções de proteção do Micrologic estão definidas por predefinição para o valor mínimo, à excepção da função de proteção de longa duração, definida por predefinição para o valor máximo.

A não observância destas instruções pode provocar danos no equipamento.

ОПАСНОСТЬ НЕПРЕДНАМЕРЕННОГО ВКЛЮЧЕНИЯ

- Настраивать аппарат должны только квалифицированные сотрудники, которые обязаны при этом использовать результаты исследования системы защиты при монтаже.
- Во время пусконаладочных работ и после внесения каких-либо изменений в конструкцию следует проверять соответствие настроек блока Micrologic X и функции защиты результатам этого исследования.
- По умолчанию защитные функции Micrologic X установлены на минимальные значения, за исключением функции защиты с большой задержкой, которой по умолчанию присвоено максимальное значение.

Несоблюдение этих инструкций может привести к повреждению оборудования.

意外操作风险

- 设备只能由有资格的人员， 利用安装保护系统 研究的结果进行配置和 设定。
- 在安装调试期间 及进行任何更改之后，检查 Micrologic X 配置和 保护功能设置是否与此研究的结果 一致。
- Micrologic X 保护功能默认 设置为最小值，但长期保护功能除外，后者默认设置为最大值。

不遵循上述说明可能导致设备损坏。

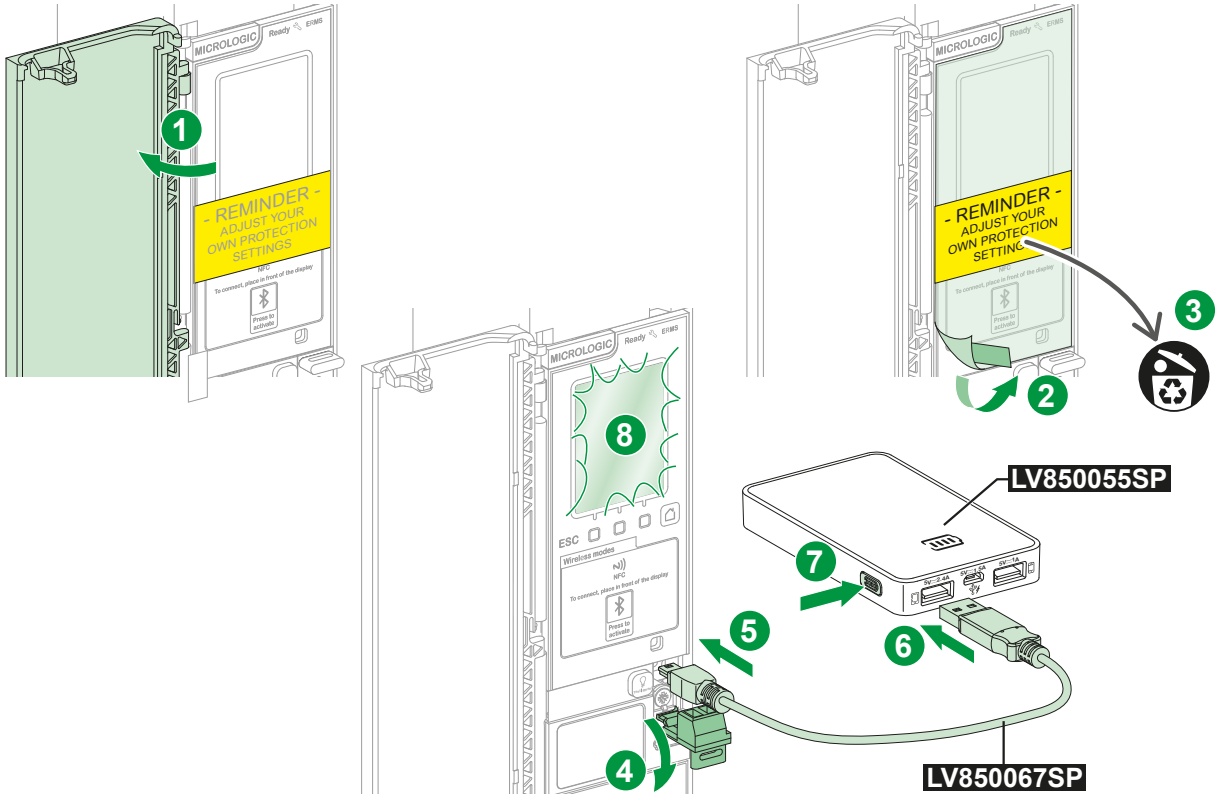

21.2 Protection Settings / Paramètres de protection / Configuración de la protección / Schutzeinstellungen / Impostazioni di protezione / Definições de proteção / Параметры защиты / 保护设置

	Micrologic 2.0 X	Micrologic 5.0 X	Micrologic 6.0 X	Micrologic 7.0 X
	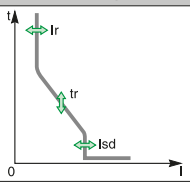	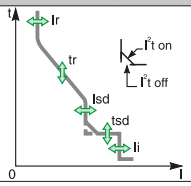	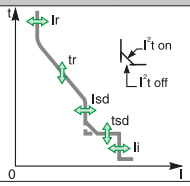	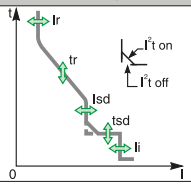
en **Long Time Protection** fr **Protection long retard** es **Protección de larga duración** de **Langzeitschutz** it **Protezione di lungo periodo** pt **Proteção de longa duração** ru **Защита с большой задержкой** zh 长期保护	Ir, tr	Ir, tr	Ir, tr	Ir, tr
en **Short Time Protection** fr **Protection court retard** es **Protección de corta duración** de **Kurzzeitschutz** it **Protezione di breve periodo** pt **Proteção de curta duração** ru **Защита с малой задержкой** zh 短期保护	Isd	Isd, tsd I²t on/off	Isd, tsd I²t on/off	Isd, tsd I²t on/off
en **Instantaneous Protection** fr **Protection instantanée** es **Protección instantánea** de **Unverzögerter Schutz** it **Protezione istantanea** pt **Proteção instantânea** ru **Мгновенная защита** zh 瞬时保护	-	Ii	Ii	Ii
en **Neutral Protection** fr **Protection neutre** es **Protección neutra** de **Neutralleiterschutz** it **Protezione neutra** pt **Proteção neutra** ru **Защита нуля** zh 中性线保护	en Off N/2 (Half neutral) N (Full neutral) OSN (Oversized neutral) it Off N/2 (Mezza neutra) N (Intera neutra) OSN (Neutra sovradimensionata)	fr Off N/2 (Demi-neutre) N (Neutre complet) OSN (Neutre surdimensionné) pt Off N/2 (Meio neutra) N (Totalmente neutra) OSN (Neutra de tamanho excessiva)	es Off N/2 (Neutro mitad) N (Neutro completo) OSN (Neutro sobredimensionado) ru Off N/2 (Нейтраль, защищенная с половинной уставкой) N (Нейтраль, защищенная с полной уставкой) OSN (Нейтраль, защищенная с завышенной уставкой)	de Off N/2 (Halber Neutralleiterschutz) N (Voller Neutralleiterschutz OSN (Verstärkter Neutralleiterschutz) zh Off N/2 (半中性线) N (全中性线) OSN (过大中性线)
	-	-	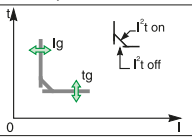	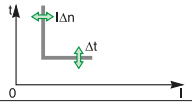
en **Ground Fault Protection** fr **Protection contre les défauts de terre** es **Protección de defecto a tierra** de **Erdschlussschutz** it **Protezione da guasto di terra** pt **Proteção de falha de ligação à terra** ru **Защита от замыкания на массу** zh 接地故障保护	-	-	Ig, tg I²t on/off	-
en **Earth-Leakage Protection** fr **Protection contre les fuites de terre** es **Protección de diferencial** de **Erdschlussschutz** it **Protezione da dispersione di terra** pt **Proteção diferencial** ru **Защита от тока утечки** zh 接地漏电保护	-	-	-	IΔn, Δt

21.3 Setting Procedure Example / Exemple de procédure de réglage / Configuración del ejemplo de procedimiento / Beispiel des Vorgehens bei Einstellungen / Esempio di procedura di impostazione / Exemplo de procedimento de definição / Пример процедуры настройки / 设置程序示例

en Setting of the long time protection Ir threshold and tr time delay.

fr Réglage du seuil Ir et de la temporisation tr de la protection long retard.

es Configuración del umbral Ir y de la temporización tr de la protección de larga duración.

de Einstellen des Langzeitschutzes Ir Schwellenwert und tr Zeitverzögerung.

it Impostazione della soglia Ir di protezione di lungo periodo e del ritardo tr.

pt Definição do limiar de Ir de proteção de longa duração Ir e do tempo de atraso de tr.

ru Настройка порога защиты с большой задержкой Ir и времени задержки tr.

zh 设置长期保护 Ir 阈值和 tr 时间延迟。

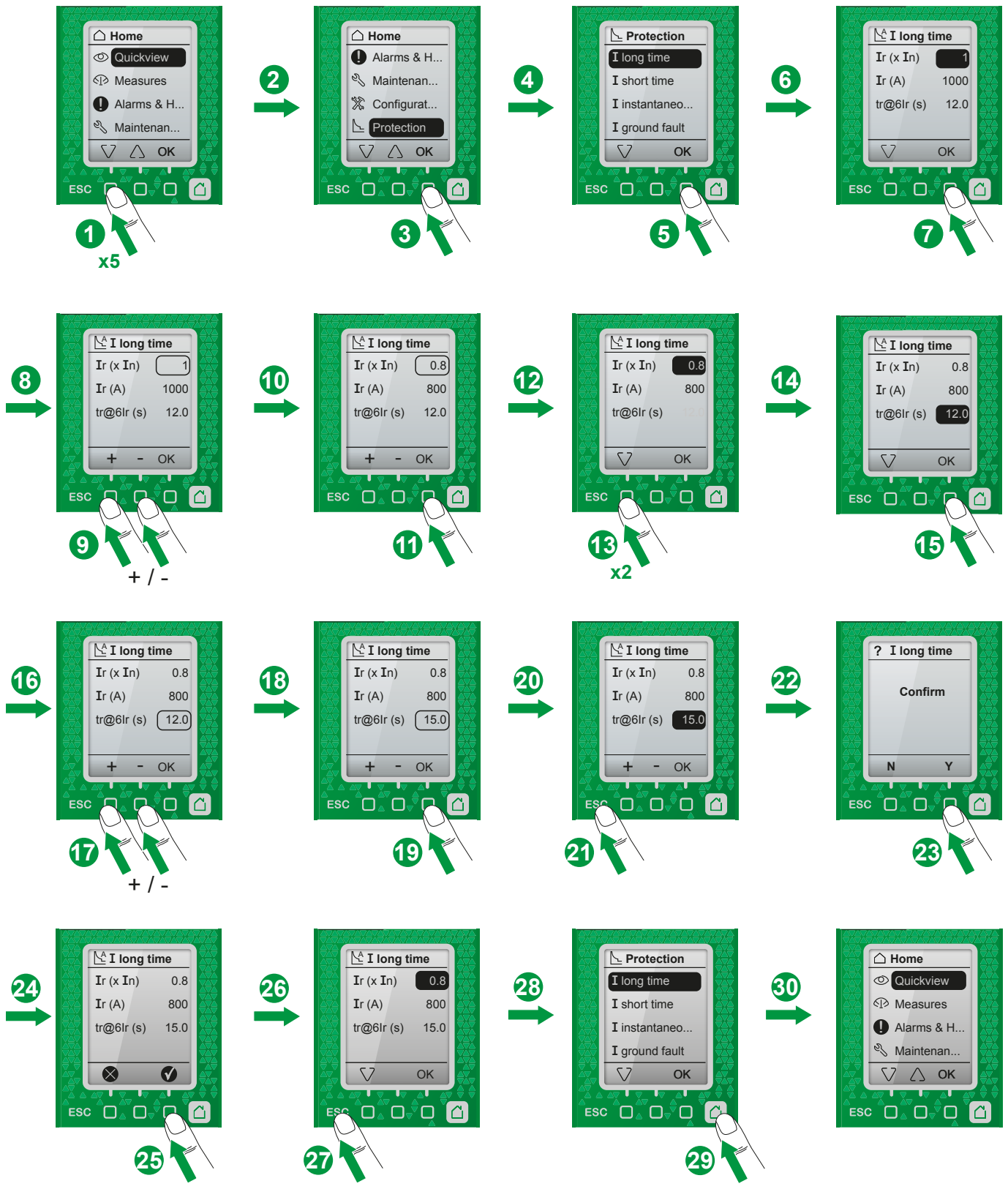

22 Commissioning / Mise en service / Puesta en servicio / Inbetriebnahme / Messa in servizio / Comissionamento / Ввод в эксплуатацию / 调试

en The testing and commissioning procedure for Masterpact MTZ2/MTZ3 devices that must be done before the device can be accepted as fit for service and connected to a power supply is described in the Masterpact MTZ2/MTZ3 user guide.

fr La procédure de test et de mise en service des appareils Masterpact MTZ2/MTZ3 qui doit être effectuée avant que les appareils puissent être considérés comme prêts à l'emploi et branchés à une source d'alimentation est décrite dans le guide utilisateur du Masterpact MTZ2/MTZ3.

es El procedimiento de prueba y puesta en servicio para aparatos Masterpact MTZ2/MTZ3, que se debe realizar para que puedan ser aceptados como idóneos para el servicio y ser conectados a una fuente de alimentación, se describe en la guía del usuario de Masterpact MTZ2/MTZ3.

de Das Verfahren der Prüfung und Inbetriebnahme für Masterpact MTZ2/MTZ3-Geräte, das durchgeführt werden muss, bevor das Gerät als betriebsbereit akzeptiert und an die Stromversorgung angeschlossen werden kann, ist im Benutzerhandbuch des Masterpact MTZ2/MTZ3 beschrieben.

it La procedura di test e messa in servizio per i dispositivi Masterpact MTZ2/MTZ3 da effettuare prima che il dispositivo possa essere accettato come adatto per il servizio e collegato a un'alimentazione è descritta nella guida utente di Masterpact MTZ2/MTZ3.

pt O procedimento de teste e colocação em funcionamento para dispositivos Masterpact MTZ2/MTZ3 que podem ser realizados antes que o dispositivo possa ser reconhecido como adequado para o serviço e conectado a uma fonte de alimentação está descrito no manual do usuário do Masterpact MTZ2/MTZ3.

ru Процедура испытания и ввода в эксплуатацию устройств Masterpact MTZ2/MTZ3, которая должна быть выполнена, прежде чем устройство может быть принято как пригодное к эксплуатации и подключено к источнику питания, описана в руководстве пользователя Masterpact MTZ2/MTZ3.

zh 在使用 Masterpact MTZ2/MTZ3 设备以及将其连接到电源之前，必须对其进行测试和试运行，相关程序的描述见 Masterpact MTZ2/MTZ3 用户指南。

⚠ ⚠ DANGER / DANGER / PELIGRO / GEFAHR / PERICOLO / PERIGO / ОПАСНОСТЬ / 危险

HAZARD OF ELECTRIC SHOCK, EXPLOSION OR ARC FLASH

- Apply appropriate personal protective equipment (PPE) and follow safe electrical work practices. See NFPA 70E, CSA Z462, NOM 029-STPS or local equivalent.
- This equipment must only be installed and serviced by qualified electrical personnel.
- Unless specified otherwise in the commissioning procedures, all operations (inspection, test, and preventive maintenance) must be carried out with the device, the chassis, and the auxiliary circuit de-energized.
- Check that the device and the chassis are de-energized on the upstream and downstream terminals.
- Always use a properly rated voltage sensing device to confirm that the device, the chassis, and the auxiliary circuits de-energized.
- Install safety barriers and display a danger sign.
- During the tests, it is strictly forbidden for anyone to touch the device, the chassis, or the conductors while voltage is applied.
- Before putting the equipment back into operation, it is mandatory to check that all connections are made with correct tightening torque, there are no tools or objets inside the equipment, all devices, doors, and protective covers are in position, and the device is off (open position).

Failure to follow these instructions will result in death or serious injury.

RISQUE D'ÉLECTROCUTION, D'EXPLOSION OU ÉCLAIR D'ARC ÉLECTRIQUE

- Portez un équipement de protection individuel (EPI) adapté et respectez les consignes de sécurité électrique courantes. Reportez-vous aux normes NFPA 70E, CSA Z462, NOM 029-STPS ou aux codes locaux en vigueur.
- Seul un personnel qualifié doit effectuer l'installation et l'entretien de cet équipement.
- Sauf mention contraire dans les procédures de mise en service, toutes les opérations (inspection, test et maintenance préventive) doivent être effectuées avec l'appareil, le châssis et les circuits auxiliaires non alimentés.
- Vérifiez que l'appareil et le châssis ne sont pas alimentés sur les bornes amont et aval.
- Utilisez systématiquement un appareil de détection de tension approprié pour vérifier que l'appareil, le châssis et les circuits auxiliaires ne sont pas alimentés.
- Installez des écrans de sécurité et affichez une plaque indicatrice de danger.
- Pendant les tests, il est strictement interdit à quiconque de toucher l'appareil, le châssis ou les conducteurs lorsqu'une tension est appliquée.
- Avant de remettre l'appareil en marche, il est impératif de vérifier que tous les raccordements sont établis avec le couple de serrage correct, qu'aucun outil ou objet ne se trouve dans l'appareil, que tous les appareils, portes et caches de protection sont en place, et que l'appareil est hors tension (position ouverte).

Si ces directives ne sont pas respectées, cela entraînera la mort ou des blessures graves.

PELIGRO DE DESCARGA ELÉCTRICA, EXPLOSIÓN O DESTELLO POR ARQUEO

- Utilice equipo de protección personal (EPP) apropiado y siga las prácticas de seguridad eléctricos establecidas. Consulte las normas NFPA 70E, CSA Z462, NOM-029-STPS u otros códigos locales correspondientes.
- Solamente el personal eléctrico calificado deberá instalar y prestar servicio de mantenimiento a este equipo.
- A no ser que se especifique lo contrario en los procedimientos de puesta en marcha, todas las operaciones (inspección, pruebas y mantenimiento preventivo) se deben realizar con el aparato, el chasis y el circuito auxiliar deenergizados.
- Compruebe que el dispositivo y el chasis estén deenergizados en los bornes aguas arriba y aguas abajo.
- Use siempre un dispositivo de detección de tensión de capacidad adecuada para confirmar que el aparato, el chasis y los circuitos auxiliares estén deenergizados.
- Instale barreras de seguridad y coloque señales de peligro.
- Durante las pruebas, está totalmente prohibido tocar el dispositivo, el chasis o los conductores mientras se aplica tensión.
- Antes de volver a poner el equipo en funcionamiento, es obligatorio comprobar que todas las conexiones se hayan realizado con el par de apriete correcto, que no haya herramientas ni objetos dentro del equipo, que todos los dispositivos, las puertas y las tapas de protección estén en su sitio, y que el dispositivo esté apagado (posición abierta).

El incumplimiento de estas instrucciones provocará lesiones graves o incluso la muerte.

GEFAHR VON ELEKTRISCHEM SCHLAG, EXPLOSION ODER LICHTBOGEN

- Tragen Sie persönliche Schutzausrüstung (PSA) und befolgen Sie sichere Verfahren im Umgang mit Elektrogeräten. Siehe NFPA 70E, CSA Z462, NOM 029-STPS oder örtliche Entsprechung.
- Dieses Gerät darf ausschließlich von qualifiziertem Elektrofachkräften installiert und gewartet werden.
- Sofern in den Inbetriebnahmeverfahren nicht anders angegeben, müssen alle Abläufe (Überprüfung, Test und vorbeugende Wartung) durchgeführt werden, wenn sich Gerät, Gehäuse und Zubehör in spannungslosem Zustand befinden.
- Überprüfen Sie den spannungslosen Zustand von Gerät und Gehäuse an den vor- und nachgeschalteten Klemmen.
- Verwenden Sie immer einen Spannungsfühler mit ordnungsgemäßer Bemessungsspannung, um zu bestätigen, dass Gerät, Gehäuse und Zubehör sich in einem spannungslosen Zustand befinden.
- Installieren Sie Sicherheitsbarrieren und bringen Sie ein Warnschild an.
- Es ist während des Tests streng verboten, Gerät, Gehäuse oder Leiter zu berühren, wenn Spannung zugeführt wird.
- Folgendes muss überprüft werden, bevor die Anlage wieder in Betrieb genommen werden kann: alle Verbindungen wurden mit dem richtigen Drehmoment angeschlossen; es befinden sich weder Werkzeuge noch Objekte in der Anlage; alle Geräte, Türen, Schutzabdeckungen befinden sich in der richtigen Position; das Gerät ist ausgeschaltet (offene Stellung).

Die Nichtbeachtung dieser Anweisungen führt zu Tod oder schweren Verletzungen.

RISCHIO DI FOLGORAZIONE, ESPLOSIONI O ARCO ELETTRICO

- Utilizzare dispositivi di protezione individuale (DPI) idonei e adottare misure di sicurezza adeguate per lavori elettrici. Vedere NFPA 70E, CSA Z462, NOM 029-STPS o l'equivalente locale.
- Questa apparecchiatura deve essere installata e seguita solo da elettricisti qualificati.
- Se non specificato diversamente nelle procedure di messa in servizio, tutte le operazioni (ispezione, test e manutenzione preventiva) devono essere eseguite con dispositivo, telaio e circuito ausiliario non alimentati.
- Verificare che il dispositivo e il telaio non siano alimentati sui morsetti a monte e a valle.
- Utilizzare sempre un dispositivo di rilevamento di tensione di capacità adeguata per confermare che dispositivo, telaio e circuiti ausiliari non siano alimentati.
- Installare barriere di sicurezza e apporre un simbolo di pericolo.
- Durante i test, è assolutamente vietato a chiunque toccare dispositivo, telaio o i conduttori durante l'applicazione della tensione.
- Prima di rimettere l'apparecchiatura in servizio, è obbligatorio verificare che tutte le connessioni siano eseguite alla corretta coppia di serraggio, che non siano rimasti utensili o oggetti all'interno dell'apparecchiatura, che tutti i dispositivi, sportelli e coperchi protettivi siano in posizione e che il dispositivo sia spento (posizione aperta).

Il mancato rispetto di queste istruzioni provocherà morte o gravi infortuni.

RISCO DE ELECTROCUSSÃO, DE EXPLOSÃO, OU DE ARCO ELÉCTRICO

- Utilize equipamento de proteção individual (EPI) apropriado e siga práticas de trabalho elétrico seguras. Consulte NFPA 70E, CSA Z462, NOM 029-STPS ou equivalente local.
- Este equipamento pode ser instalado e revisado apenas por eletricistas qualificados.
- A menos que seja especificado de outra forma nos procedimentos de colocação em funcionamento, todas as operações (inspeção, teste e manutenção preventiva) devem ser executadas com o dispositivo, os chassis e o circuito auxiliar desenergizado.
- Verifique se o dispositivo e os chassis estão desenergizados nos terminais ascendente e descendente.
- Sempre utilize um dispositivo sensor de tensão calibrado adequadamente para confirmar que o dispositivo, os chassis e os circuitos auxiliares estão desenergizados.
- Instale barreiras de segurança e deixe à vista um sinal de perigo.
- Durante os testes, é terminantemente proibido a qualquer pessoa tocar no dispositivo, nos chassis ou nos condutores enquanto houver tensão aplicada.
- Antes de colocar o equipamento novamente em funcionamento, é obrigatório verificar se todas as conexões foram realizadas com o torque correto de aperto, se não há ferramentas ou objetos dentro do equipamento, se todos os dispositivos, portas e coberturas de proteção estão em posição e se todos os dispositivos estão desligados (posição aberta).

A não observância destas instruções resultará em morte, ou ferimentos graves.

Опасность поражения электрическим током, взрыва или возникновения дуги

- Используйте соответствующие средства индивидуальной защиты (СИЗ) и следуйте методам безопасной работы с электричеством. См. NFPA 70E, CSA Z462, NOM 029-STPS или местный аналогичный стандарт.
- Установка и эксплуатация оборудования может выполняться только квалифицированными электриками.
- Если в описании процедур ввода в эксплуатацию не указано иное, все операции (осмотр, испытания и профилактическое обслуживание) с устройством, шасси и вспомогательным контуром следует выполнять, когда на них не подается питание.
- Убедитесь, что на устройство и шасси не подается питание на клеммах выше и ниже в цепи.
- Обязательно используйте обладающий соответствующими характеристиками датчик напряжения для проверки отключения питания устройства, шасси и вспомогательных контуров.
- Установите защитные барьеры и знак «Опасно!».
- Во время испытаний категорически запрещено касаться устройства, шасси или проводников, когда подается напряжение.
- Перед возобновлением эксплуатации оборудования следует обязательно убедиться, что все подключения выполнены с правильным моментом затяжки, что внутри оборудования нет инструментов или предметов, что все устройства, дверцы и защитные крышки находятся в правильном положении и что устройство отключено (в открытом положении).

Несоблюдение этих инструкций приведет к смерти или серьезной травме.

电击、爆炸或弧闪的危险

- 采用适当的个人防护设备 (PPE) 并遵循电气作业安全守则。请参阅 NFPA 70E、CSA Z462、NOM 029-STPS 或相应当地标准。
- 只有具备相应资质的电气人员才能安装和维修该设备。
- 除非试运行程序中另有规定，否则所有操作（检查、测试和预防性维护）必须在设备、抽架和辅助电路断电之后才可执行。
- 核实上游和下游端子上的设备和抽架已断电。
- 务必使用规格适当的电压传感设备以确认设备、抽架和辅助电路已断电。
- 安装安全栅并显示危险标志。
- 在测试期间，严禁任何人触摸已施加了电压的设备、抽架或导体。
- 将设备重新投入运行之前，必须核实所有连接的拧紧扭矩都正确，设备内部没有任何工具或物体，所有设备、门和防护盖都已就位，且设备处于关闭状态（开路位置）。

不遵循上述说明将导致人员伤亡。

Schneider Electric Industries SAS
35, rue Joseph Monier
CS 30323
F - 92506 Rueil Malmaison Cedex
www.schneider-electric.com

https://www.schneider-electric.com



Printed on recycled paper.

Уполномоченный
поставщик в РФ:
АО «Шнейдер Электрик»
Адрес:
127018, г. Москва, ул.
Двинцев, д.12, корп.1,
тел. +7 (495)777 99 88,
факс: +7 (495)777 99 94, 8-800-200-6446
www.schneider-electric.ru

NVE35470-02

© 2017 Schneider Electric - All rights reserved.

INSTALLATION, OPERATION AND MAINTENANCE GUIDE

FOR INDOOR/OUTDOOR THREE-PHASE INSULATED TRANSFORMERS



Transformers are useful for industrial application and comply with last standards

General prescriptions

1. Do not lift or move a transformer without proper equipment and experienced personnel
2. Do not install the transformer until all installations has been completed
3. Use terminals only for electrical connections.
4. Connections should only be in accordance with the nameplate diagram and/or connection drawings
5. Make sure all power is disconnected before attempting any work on the transformer
6. Make certain all ground connections are completed and tightened before energizing the transformer
7. Do not attempt to change any taps – primary or secondary, while the transformer is energized
8. Do not change connections when the transformer is energized
9. Do not adjust or remove any accessories or cover plates while the transformer is energized

CONTENTS:

General prescriptions	2
Handling	3
Receiving & Inspection	3
Storage	3
Installation	4
Ventilation	4
Accessibility	4
Sound Levels	5
Cable Connections	5
Grounding	6
Inspection Before Energization	6
Maintenance	7

GENERAL INFORMATIONS

All transformers are manufactured according with customers specifications.

Three phase transformers are manufactured to provide optimum performance for a lifetime of uninterrupted service. Careful attention to the following instructions is recommended for safe and reliable operation.

Installation, operation and maintenance of transformer should be performed by qualified persons, familiar with electrical apparatus and the potential hazards involved.

Warning: Danger! There is the potential of electric shock whenever working in or around electrical equipment such as transformers. Power must be shut off before any work is conducted on a transformer, pay attention that nobody can switch on the power before all maintenance activity has been finished

About installation, operation and maintenance of dry type transformer please refer to EN 60204-1, EN 615581

HANDLING

Transformers are either shipped in cartons or palletized. The units on pallets can either be lifted via a forklift truck or hoisted by the lifting lugs provided.

Appropriate lifting equipment should be used relative to the size of each transformer. No attempt should be made to lift or move a transformer from any points on the unit other than those indicated. It's also possible to lift transformers by crane, pay attention that the arrow has to have 60° maximum. Translation can be done just on two directions. The change direction is possible trough adjustable cart.

Please Note: On units bolted to the pallets, please remove all the shipping bolts located at the mounting holes.



WARNING! Do not move transformers acting directly on the coins

RECEIVING INSPECTION

Immediately after receiving the transformer, it should be inspected for any transit damage and for correctness against the shipping documents.

The unit should be examined for any breaks in its packaging, dented or damaged enclosures or missing parts from the packing list.

If any damage is noted, a claim should be filed immediately with the carrier and a second copy of all pertinent information relative to the order and the circumstances should be filed with the local sales office.

STORAGE

Transformer that will not be immediately installed and energized, should be stored in a clean dry environment away from any environmental airborne contaminants.

It is recommended that transformer be stored in a heated building, in the original packaging.



WARNING ! Temperature must be not less than -25°C!

INSTALLATION

Mounting Instructions

Select an installation location that is on a non-combustible surface and possibly in a flat position.

The mounting location must allow for air circulation around the transformer for cooling purposes. Please refer to the minimum distances stated in the ventilation section

Using the appropriate mounting template provided, fixing transformer to the appropriate surface

In case of bolts fixed in concrete lift the transformer with appropriate mechanical equipment

Install the lower mounting bolt, lock washer, flat washer and rubber washer into the lower mounting hole(s)

Standard Ambient conditions

Maximum altitude 1.000 m.l.s (for over operating altitude please ask to our technical department)

Dry environment without the presence of dust or corrosive vapors

Ambient temperature 0/40°C (104°F) max excursion 40°C average per day 30°C average per year 20°C

VENTILATION

Transformer required to be installed in an area where they can be cooled, means of the free circulation of air where the average ambient temperature not exceed 40°C (104°F) at any time, all modifications must be declare during project development.

Adequate ventilation is essential for transformers to meet their nameplate KVA capability.

Multiple INSULATED transformer should be located at least 10 inches apart on units up to 10 kVA and at least 40 inches apart on units over 10 kVA, away from any other obstructions to allow free, clean circulation of air.

ACCESSIBILITY

Is necessary that transformers be accessible for inspection and located accordingly.

However, transformer should not be located in areas where stored items are likely to interfere with either natural air convection or the capability to have them inspected.

Passage ways or other areas where people could be exposed to live parts during inspection should also be avoided.

Adequate protection should be provided under any circumstances.

TRANSOFORMER SOUND LEVELS

Transformers are an electrically energized apparatus and by their nature emit sound due to their component materials.

Transformers are required to meet standards for the maximum sound levels permissible.

These sound level standards vary from 40 to 65 dB and hence, can be an annoyance if located in close proximity to where people work or reside.

Care should be therefore be exercised in selecting sites for transformers particularly to avoid sensitive areas like hospitals, classrooms, medical or office facilities.

In case of installation close to sensitive areas, the following guide lines may be helpful;

- Units should be mounted away from corners or reflecting walls or ceilings
- Cable or other flexible conduit should be considered to make connections
- Acoustically absorbing materials could be considered for walls and ceilings around the unit
- The location of the unit should be located as far as practical from areas where sound levels could be considered undesirable

CABLE CONNECTIONS

Open the wiring compartment by removing the four cover hex head cap screws and washers, carefully lift the cover in order to avoid damage ground cables.

Make the appropriate electrical connection to suit the desired voltages as per the connection diagram on the nameplate. This includes the input connections and the ground.

Normally low voltage terminals are on the top position, they are made with clamps or flat bars aluminum or copper.

The connecting cable size is determined from the line current rating of the transformers primary and secondary windings.

Make certain to insulate any unused wire leads with marrette connectors and electrical tape

Close the wiring compartment and ensure that the cover screw is tightly secured

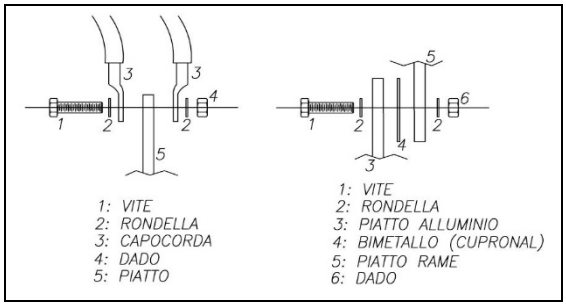

WARNING: All connections must be fixed in a good way, recommend that you tighten all the screws with a torque wrench categories, sub having the security that all termianali are fixed in a similar manner

Is not allowed change the internal connections, this would be expiring the warranty and the installation doesn't comply the nameplate information.

Check the cable insulation, in case use special protection like isolated sheaths.

GROUNDING

WARNING: BT and grounding cable has not to pass through the coils

All core and coil assemblies are solidly grounded to the enclosure internally to ensure that all conductive metal parts have the same potential.

The transformer enclosure in turn should also be securely and effectively grounded as a safety precaution.

This grounding should be in accordance with national electrical code standards.

INSPECTION BEFORE ENERGIZATION

For the safe and proper operation of the transformer, we recommend that the following items be checked for completeness:

Before energizing and connecting and loads, please measure and verify the output voltage matches nameplate specifications

Ensure correct phase connections. Refer to the nameplate vector diagram

Ensure that voltage connection are exactly the same has you can see on terminals or connection bars

The total load among all the phases should be balanced as much as possible for optimum performance of the transformers winding. Any 3 phase or single phase load may be connected to the transformer but the kVA loading on each phase must not exceed 1/3 of the nameplate kVA

The clearance and tightness of all electrical connections should be checked

Remove all packaging and be sure that machine is installed in clean and free circulation air

Locked the wheels (in case are present) where place are chose.

Check the right input voltage and verify that primary and secondary connection are made with cable with appropriate section.

Be sure that all distance between metal part or active components are respected

WARNING: If trasformer was storaged at -25°C is necessary before first energization wait till 24H with ambient temperature about +25°C

For all relatively normal and clean installations, transformers will operate satisfactorily under normal conditions of energization and load.

For your reference, fully loaded transformers may be very warm to the touch, particularly on the top of the unit. Standards permit that maximum surface temperatures for Class F should be 70°C. This represents normal loading and should not be of concern. Coils could achieve 140°C

Also Transformers with IP 44 enclosure are designed to operate continuously at their full nameplate kVA rating.

Short time overload as it relates to time and temperature and the corresponding loss of life of the transformer

Overload that results in a reduction of life expectancy of the transformer

If the transformer is experiencing increased temperatures, the following load characteristics should be considered immediately:

Rigorous motor loads or other impact type loading for which a specific transformer for that application is required

Over-excitation of unit due to excess supply line voltage or current

Ambient temperatures above standard

Overload beyond ANSI C57.96 guidelines

Harmonic distortions of the supply line voltage and currents

MAINTENANCE

Under normal operating conditions and environments, transformers with IP 44 enclosure require maintenance, filters has to be cleaned periodically.

However, periodic care and inspection is a good practice, particularly if the unit is exposed to extreme environmental conditions.

Peripheral inspection and external dust and dirt removal may be carried out while the transformer is in operation. However, access covers must not be opened under energized conditions.

The accumulation of ice will not adversely effect the operation of IP44 enclosure transformers, anyway enclosure must be installed in internal ambient.

However, the accumulation of dust or dirt will effect the cooling of the transformer and may become a potential fire hazard.

Internal maintenance must be performed with a transformer de-energized, isolated and with the terminals grounded.

The ground connection should be checked to ensure a low impedance connection.

For all information regarding schedule maintenance check follow table:

Check	Time	Tools
tightening BT cables	One year before energization	torque wrench
Auxiliary terminals	One year before energization	Visual or Tester where is allowed
Alarm and trip unit temperatur sensors	One year before energization	Trip unit test
Cleaning dust and deposits	Every six or twelve months	Dry air
Insulation resistance BT	One year before energization	Megaohmetr Megger

Auxiliary drawings

If transformers has some temperature sensors connections are follow

Thermal class	Alarm	Shut down
B	100°	130°

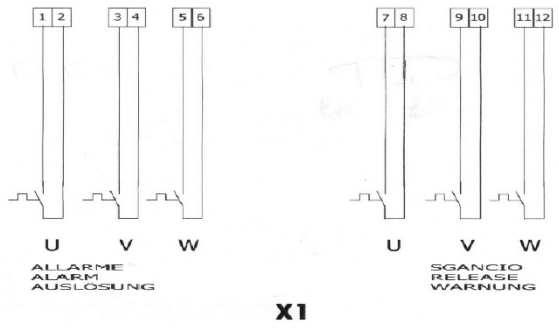

F	130°	150°
H	150°	170°

In order to avoid some signal interferences it will be better to maintain some distance between power cable and sensor wiring

Thermal class	Forced Ventilation	Alarm	Shut down
B	95°	120°	130°
F	110°	135°	150°
H	125°	150°	170°

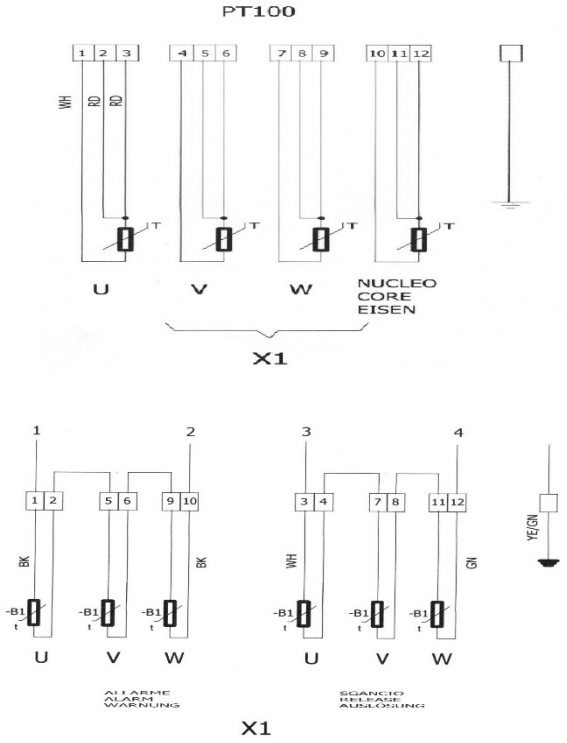

Warranty: We confirm that all products are manufactured according with strictly norms, all products are warranted for one year from selling date, against constructive defects; we are not responsible in case of wrong use, or failure to comply with this instruction manual, or special events which are not depend directly from us.

11.5 NT25x/x (Power Supply Modules)

All necessary bus-side voltages of the hardware modules of a controller are made available via the NT25x/x module.



Fig. 392: NT25x/x

Modules for the extended temperature range (ColdClimate) have a ❄- symbol on the front.

11.5.1 Technical data

- DC/DC converter for 3 output voltages +5 VDC, +15 VDC and -15 VDC
- Supply error signal, which is enabled upon switching off of the input voltage

Power Supply Module		NT255 NT255 ❄	NT250/48
Input voltage, nominal		24 VDC	48 VDC
Input voltage, range Inclusive possible ripple		18 to 34 VDC	38 to 58 VDC
Input voltage Maximum value, t < 1 s/min		40 VDC	60 VDC
Output power		≤ 45 W	≤ 42 W
Powerfail warning after interrupt of the input voltage		Typically after 3 ms	
Ripple, allowable		≤ 2,4 V_{ss} with 100 Hz	
Bridging of interrupts in the input voltage		≥ 18 ms ≤ 1x / s	≥ 10 ms ≤ 1x / s
Input current, switch on		≤ 8 A after 5 ms	≤ 7 A after 5 ms
Input capacitance, switch on		Typically 3,000 µF	Typically 1,000 µF
Input fuse / Characteristics		Safety fuse soldered onto print / 7 A fast, UL248-14	Safety fuse soldered onto print / 6.3 A fast, UL248-14
Efficiency		Typically 85 %	Typically 75 %
Current for I/O modules / output voltage	+5 VDC	≤ 6.0 A	
	+15 VDC	≤ 0.5 A	
	-15 VDC	≤ 0.5 A	
Reverse polarity protection		Yes	
Galvanic isolation external power supply/system		Yes, up to 500 V	
Galvanic isolation, external power supply/earth		Yes, up to 100 V	
❄ ColdClimate design			

Tab. 840: NT25x/x – Technical data

Switch on

The input current surge when switching on depends on the external power supply and the wiring.

Source and line resistance limit the peak value of the inrush current and together with the input capacity also determine its duration.

Galvanic isolation

The galvanic isolation does not fulfil any protective function.

Functional ground and housing are connected inside the module. The secondary ground is connected to the functional ground as well as the housing.

Ambient conditions

Power Supply Module		NT255/x	NT255 ❄
Temperature	Operation	-30 to +60 °C (standard install position)[1)] -30 to +55 °C (other install position)	
	Storage	-40 to 85 °C	
Relative humidity	Operation	5 to 95 % without condensation	5 to 95 % with condensation
	Storage	5 to 95 % with condensation	
[1)] Standard installation position see (→ *Chapter 2.1, Page 7-10*) ❄ ColdClimate design			

Tab. 841: NT25x/x – Ambient conditions

Error messages

Error message	Meaning
Loss of voltage external	Message to the processor module. The panic handler is started. It ensures a defined shutdown with voltage drops that are longer than the bridging time. → *Chapter 6.5 "Panic handler", Page 3-44*

Tab. 842: NT25x/x – Error messages

11.5.2 Status indication

LED	Status	Description
RDY (yellow)	ON	M1 processor module can communicate with the module.
	OFF	M1 processor module could not establish communication with the module or a problem occurred when loading the driver. See logbook for further information.
	Flashes	Error M1 processor module can communicate with the module, but the module did detect an error, e.g. cable break or voltage failure. The fault can be evaluated by the application software.

Tab. 843: RDY status indication

LED	Status	Description
POWER (green)	ON	All voltages are in the specified range.
	OFF	One or more voltages are not in the specified range.
ERR (red)	ON	Overload at the output, short-circuit at the output, or the safety fuse has been triggered.
	OFF	No error has occurred.

Tab. 844: Status indication

The LED ERR can light up briefly at power up.

If the LED ERR is continuously lit after the power supply unit module NT255 was shut off due to an error, the power supply unit can be switched back on by briefly unplugging the input voltage.

11.5.3 Pin assignments

Powersupply

	Pin	Signal	Description
	1	+	+24 VDC (at NT25x)
			+48 VDC (at NT250/48)
	2	-	Ground
	3		Shield (functional ground)

Tab. 845: Pin assignment supply voltage

11.5.4 Switch on behavior

If a module without a load (backplane) is fed with voltage, it is possible that the POWER LED will not light up. This does not mean that the module is defective.

The switch on time of the input voltage between 9 V and the minimum value U_{min} must be < 1 s otherwise an undervoltage is detected and the module will switch off. Then, in order to be able to switch it on again, it must be separated from the input voltage for 5 seconds.

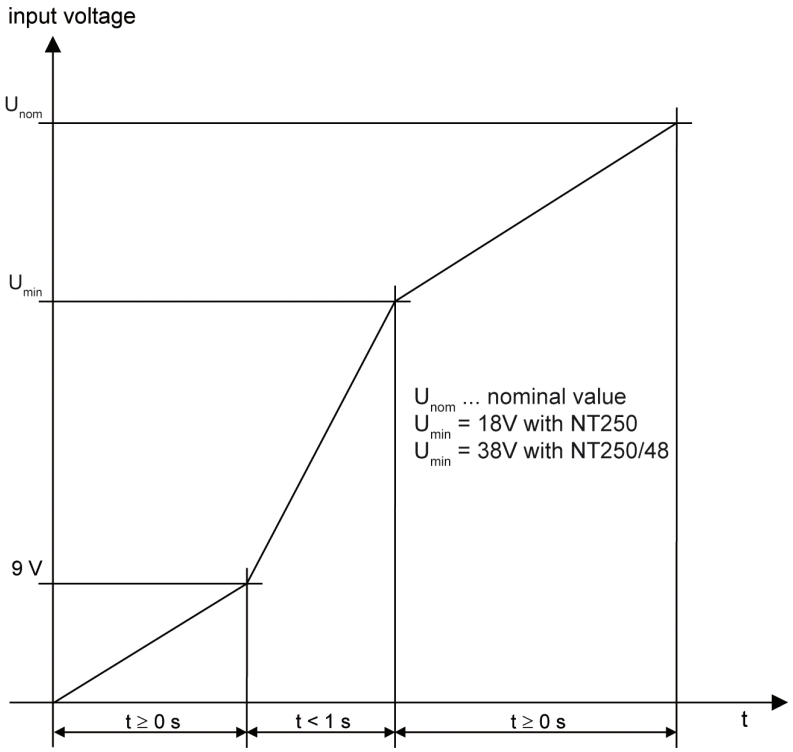

Fig. 393: Input voltage NT250/x

11.5.5 Monitoring functions

The NT25x/x modules are protected against reversing polarity of the input voltage. The reversing of input voltage polarity can result in the activation of the input fuse in the NT250 and NT250/48 module with function code ER < 100.

The fusible cutout can only be replaced by Bachmann electronic GmbH.

The NT250 and NT250/48 module switches off in case of a short circuit on the bus side. The module must be unplugged from the input voltage for ≥ 5 seconds in order to be able to switch it on again.

The NT255 module shuts off in the event of a short circuit on the bus side and attempts to switch back on at periodic intervals.

Defined shut down of the controller is not ensured if there is a bus-side short circuit, as the NT25x/x module cannot report the power failure to the processor module in time.

4.2 MC2xx (Processor Module)

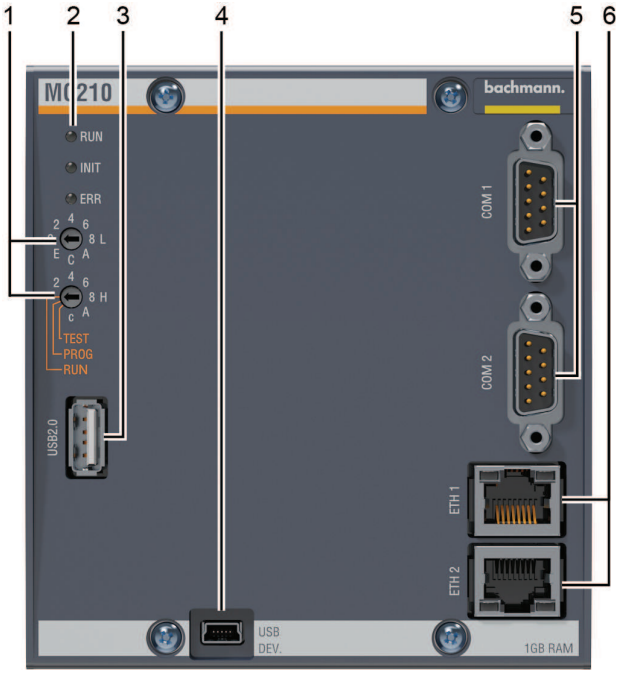

Fig. 57: MC2xx – Mechanical construction (overview)

1) Hex rotary switch
2) Processor status LEDs
3) USB interface
4) USB Mini interface
5) COM interfaces (2x)
6) Ethernet interfaces (2x)

Description	Option	Type
MC2xx	–	Standard version
	❄	ColdClimate[1] (Operation and storage under thawing conditions possible)
[1] ColdClimate; identified by a ❄- symbol on the front		

Tab. 59: Type code

4.2.1 Technical data

Processor + memory

Processor module	MC205	MC205 ❄	MC210	MC210 ❄
CPU	Intel® Atom™			
Clock speed	600 MHz		1.6 GHz	
Data memory NVRAM	512 kB Data retention assured for > 10 years SRAM/EEPROM has unlimited write cycles			
Working memory DRAM	1 GB			
FLASH program memory	64 MB (system software) 100.000 write/delete cycles with Wear-Leveling			
Mass storage CFast card	Type I Maximum available capacity available for use [1)]			
Process map controller	Autonomous			
❄ ColdClimate design [1)] Bachmann recommends using only industrial types with an extended temperature range and an appropriately high number write/delete cycles (→ *Chapter 15.2, Page 4-1617*).				

Tab. 60: MC2xx – Processor + memory

The integrated rechargeable battery is required for the operation of the RTC in the processor module's idle state and keeps time for approx. 6 months in the temperature range from 0 to +60 °C (for temperatures outside this range no guaranteed information is obtainable). Therefore, processor modules can be stored for ≤ 6 months in a powerless state without time loss.

The recharging of an empty rechargeable buffer battery takes approx. 48 hours. The rechargeable battery is normally discharged through Bachmann electronic GmbH at delivery.

Further information

For the risks and general configuration principles of storage media, also see

→ *Chapter 1.1 "Technical measures", Page 2-2*

Interfaces

Processor module	MC205	MC205 ❄	MC210	MC210 ❄
COM1 (serial)	1 x RS232 with complete signal set			
COM2 (serial)	1 x RS232 (reduced signal set), RS422 or RS485			
ETH (Ethernet)	2 x Ethernet 10/100/1000BaseT (10/100/1000 Mbit/s, Twisted Pair, autocross detection) IEEE1588 Hardware Support			
USB	1 x USB 2.0 (→ *Chapter 16, Page 4-1625*) 1 x USB Mini-B (USB device, (→ *Chapter 1, Page 9-1*))			

Tab. 61: MC2xx – Interfaces

Additional characteristics

Processor module	MC205	MC205 ❄	MC210	MC210 ❄
Watchdog	Yes			
Synchronization pulse	Yes			
Real Time Clock (RTC)	Precision ±20 ppm at +25 °C, battery-buffered			
Operating modes	Two 16-position hex rotary switches **H/L** for the 224 selectable network addresses and operating modes **RUN**ning, **TEST**ing and **PROG**ramming			

Tab. 62: MC2xx – Additional characteristics

The accuracy of a clock crystal (RTC) is dependent on the temperature. A frequency tolerance of ±200 ppm together with the basic tolerance of ±20 ppm results across the entire temperature range. The larger or broader the temperature range during use, the greater the influence of temperature. The influence on applications in machine halls with relatively even ambient temperature is correspondingly low and can usually be ignored.

If several processor modules should process data synchronously, it is recommended that you synchronize the processor modules clocks using the corresponding network protocols and trace back to a time base (time server). The SNTP or PTP ((→ *Chapter 2.5, Page 17-29*)) are suitable for this for example.

The time base itself can be synchronized using suitable time devices (GPS receiver, Internet time bases).

Ambient conditions

Processor module		MC205	MC210	MC205 ❄	MC210 ❄
Temperature	Operation	-30 to +60 °C (standard install position) [1)] -30 to +55 °C (other install position)			
	Storage	-40 to +85 °C			
Relative humidity	Operation	5 to 95 % without condensation		5 to 95 % with condensation	
	Storage				
[1)] Standard installation position see (→ *Chapter 2.1, Page 7-10*) ❄ ColdClimate design					

Tab. 63: MC2xx – Ambient conditions

Power supply

Processor module		MC205	MC205 ❄	MC210	MC210 ❄
Power supply		Via BS2xx backplane			
Current consumption via backplane	+5 VDC	2,100 mA		2,400 mA	
	+/-15 VDC	–			
❄ ColdClimate design					

Tab. 64: MC2xx – Power supply

4.2.2 Status indication

RUN, INIT, ERR

RUN (green)	INIT (yellow)	ERR (red)	Description
OFF	OFF	OFF	Power supply off
OFF	ON	OFF	Boot procedure running Duration: typically 15 to 60 seconds depending on the CPU, control setup, configuration and application behavior
OFF	ON	ON	The controller is started with the switch setting **Test**/**Prog** and then waits for the request from the MBoot command: → *Chapter 4.2 "Working with MBoot commands ", Page 10-25*
ON	OFF	OFF	Controller booting finished successfully and ready
OFF	OFF	ON	Boot procedure aborted due to an error (see message on console)

Tab. 65: Status indication

Ethernet

LED	Status	Description
LED 1	Illuminated green	Connected to 1000 Mbit network
	Illuminated yellow	Connected to 100 Mbit network
	Off	Connected to 10 Mbit or offline
LED 2	Illuminated green	Network connection has been established
	Flashing green	Data is being transferred
	Off	Not connected to the network or offline

Tab. 66: Status indication – Ethernet

4.2.3 Pin assignments

Connectors are shown as seen from the cable, not from the module side!

COM1

D-Sub 9 pin (female)

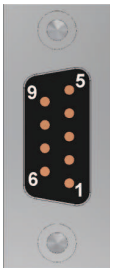

Pin	Signal	Description
1	DCD	Data Carrier Detect
2	RxD	Receive Data
3	TxD	Transmit Data
4	DTR	Data terminal ready
5	GND	Ground (over 100 Ω PTC resistance)
6	DSR	Data Set Ready
7	RTS	Request To Send
8	CTS	Clear To Send
9	RI	Ring Indicator

Tab. 67: Pin assignment for RS232C

COM2

NOTICE

Damage from connecting a standard null modem cable to the combined interface (COM 2)!

Destruction of the interface by signal short circuit!

▶ Only use approved wiring.

→ *Chapter 4.8.4 "Modem cable for combined interfaces", Page 8-37*
→ *Chapter 4.8.5 "Data cable for combined interfaces", Page 8-38*

The modules already contain a terminating resistor for the RS485 interface. Therefore the module must be placed at the end of an RS 485 network.

D-Sub 9 pin (female)

	Pin	Signal	RS232	RS422	RS485	Description
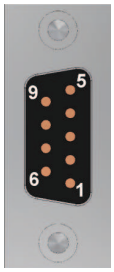	1	TxD+	-	X	-	Transmit Data +
	2	RxD	X	-	-	Receive Data
	3	TxD	X	-	-	Transmit Data
	4	TxD-	-	X	-	Transmit Data -
	5	GND	X	X	X	Ground (over 100 Ω PTC resistance)
	6	RxD+	-	X	-	Receive Data +
		RXD+/TXD+	-	-	X	Receive Data +/Transmit Data +
	7	RTS	X	-	-	Request To Send
	8	CTS	X	-	-	Clear To Send
	9	RxD-	-	X	-	Receive Data -
		RxD-/TxD-	-	-	X	Receive Data - / Transmit Data -

Tab. 68: Pin assignment for reduced RS232/RS422/RS485

ETH1/2

RJ45

	Pin	Signal 10/100BaseTX	Signal 1000BaseT	Description
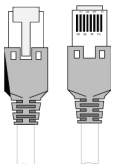	1	TxD+	BI_DA+	Bi-directional pair A + (1000BaseT) Transmit Data + (10/100BaseTX)
	2	TxD-	BI_DA-	Bi-directional pair A - (1000BaseT) Transmit Data- (10/100BaseTX)
	3	RxD+	BI_DB+	Bi-directional pair B + (1000BaseT) Receive Data + (10/100BaseTX)
	4	n. c.	BI_DC+	Bi-directional pair C + (1000BaseT) not connected (10/100BaseTX)
	5		BI_DC-	Bi-directional pair C - (1000BaseT) not connected (10/100BaseTX)
	6	RxD-	BI_DB-	Bi-directional pair B - (1000BaseT) Receive Data - (10/100BaseTX)
	7	n. c.	BI_DD+	Bi-directional pair D + (1000BaseT) not connected (10/100BaseTX)
	8		BI_DD-	Bi-directional pair D - (1000BaseT) not connected (10/100BaseTX)

Tab. 69: Pin assignment Ethernet connector

USB

USB

	Pin	Signal	Description
	1	+5 VDC	Supply voltage
	2	D -	Data -
	3	D +	Data +
	4	GND	Ground

Tab. 70: Pin assignment for USB connector

USB Mini-B

USB Mini-B

	Pin	Signal	Description
	1	+5 VDC	Supply voltage
	2	D -	Data -
	3	D +	Data +
	4	n. c.	not connected
	5	GND	Ground

Tab. 71: Pin assignment for USB connector

Power supply

	Pin	Signal	Description
	1	+	+24 VDC
	2	-	Ground
	3		Shield (functional ground)

Tab. 72: Pin assignment supply voltage

9 Interface modules

9.1 EM2xx (Industry Ethernet Master)

The modules EM203, EM213 and EM213❄ are industry-capable Ethernet masters used for accessing data of the M1-controllers. They function as an Ethernet gateway for the M1-controller system and enable components that do not have an Ethernet interface to connect to the network.

Via standard protocols, e. g. the configuration can be realized or accessed on the visualizer.

The modules EM203, EM212 and EM213❄ can e. g. be used on FASTBUS substations in order to make an additional Ethernet access available there. The relevant control data is transmitted in real time and in addition to the Ethernet data through a fiber optics cable. Thus an Ethernet connection is possible from any point of the machine or plant decentralized via FASTBUS.

In addition the modules EM203, EM212 and EM213❄ can be used for integrating the processor module ME2xx/CN in an Ethernet network.

The Ethernet network is based on the 10/100BaseT technology.



Fig. 358: EM213

Modules for the extended temperature range (ColdClimate) have a ❄- symbol on the front.

9.1.1 Technical data

- Integrated switch
- Three 10/100BaseT transceivers
- Crossed and uncrossed cables can be used (autocross detection)

Up to two industrial Ethernet masters can be used on a controller. Other combinations with other input / output modules are permitted. However, the maximum performance of the power supply module must be taken into account.

Interfaces

Industry Ethernet Master	EM203	EM213	EM213❄
Connector	3 x RJ45 (autocross detection)		
Line length	≤ 100 m		
Transfer rate to M1 CPU	≤ 2.4 Mbit/s		
Transmission rate as switch	≤ 100 Mbit/s		
Cable impedance	100 Ω		
❄ ColdClimate design			

Tab. 690: EM2xx – Interfaces

Ambient conditions

Industry Ethernet Master		EM203	EM213	EM213❄
Temperature	Operation	0 to +60 °C (standard install position)[1)] 0 to +55 °C (other install position)	-30 to +60 °C (standard install position)[1)] -30 to +55 °C (other install position)	
	Storage	-40 to +85 °C		
Relative humidity	Operation	5 to 95 % without condensation		5 to 95 % with condensation
	Storage	5 to 95 % without condensation	5 to 95 % with condensation	
[1)] Standard installation position see (→ *Chapter 2.1, Page 7-10*) ❄ ColdClimate design				

Tab. 691: EM2xx – Ambient conditions

Power supply

Industry Ethernet Master		EM203	EM213	EM213❄
Power supply		Via BS2xx backplane		
Current consumption via backplane	+5 VDC	280 mA	350 mA	350 mA
❄ ColdClimate design				

Tab. 692: EM2xx – Power supply

9.1.2 Status indication

LED	Status	Description
RDY (yellow)	ON	M1 processor module can communicate with the module.
	OFF	M1 processor module could not establish communication with the module or a problem occurred when loading the driver. See logbook for further information.
	Flashes	Error M1 processor module can communicate with the module, but the module did detect an error, e.g. cable break or voltage failure. The fault can be evaluated by the application software.

Tab. 693: RDY status indication

LED	Status	Description
LinkPuls (green)	Flashes	Data is being transferred
Speed (orange)	ON	Interface is working with maximum data transmission rate

Tab. 694: Ethernet status indication

9.1.3 Configuration

Opening the configurator

Use Device Manager for the configuration.

→ *Chapter 10.4 "Configuring a hardware module", Page 13-269*

▶ Double-click the hardware module in navigator view.

➔ Configurator view opens.
The group "Basic configuration" is selected by default.

Carrying out the configuration

Requirements

Configurator view must have been opened.

Procedure:

1. Make changes.
   For detailed information on the parameters see the following description.

2. Save changes with .
➔ The configuration is entered in the `mconfig.ini` file (→ *Chapter 5, Page 17-149*).

9.1.3.1 Group "Basic configuration"

Parameter [1)]	Description / possible values		Default
CardNumber	Defines the logical module number by which the application programs address the module. Is assigned automatically, but an application specific value can also be entered. Every CardNumber assigned in the system must be unique. Allowed values: 1 to 32,000		Slot Number (SlotNb) (Automatic)
SlotNb	Defines the slot number Is assigned automatically, however a user-specific value can also be entered. Allowable values: 1 to 16		(Automatic)
StationNb	Defines the station number Is assigned automatically, however a user-specific value can also be entered. Allowable values: 1 to 16		(Automatic)
Mode	Operating mode of the module; possible values:		"Real"
	Real	Real hardware module that is mounted on the M1 controller	
	Virtual	Hardware module physically not present on the M1 controller Input channels can only be read, output channels can be read and written	
	VirtualRW	Hardware module physically not present on the M1 controller Input and output channels can be read and written	
DriverName	The name of the module driver that is used to check the MIO-handler. Is added automatically (cannot be configured)		(Automatic)
CardName	Defines which module variant is simulated in virtual mode. • EM203 • EM213		"EM203"

Parameter [1]	Description / possible values	Default
NetAddress	Defines the IP address of the EM203, EM213 or EM213❄ module. **i** Each EM203, EM213 or EM213❄ module must be placed in a separate network area. Ensure that the configured **NetAddress** does not conflict with the network address of other interfaces on the controller, such as MP2xx, ME203C, other EM203 EM213 or EM213❄ modules or PPP. By using a placeholder in the address **NetAddress** (example 192.0.0.*), the address is generated from the position of the rotary switch of the processor module. If this keyword is not defined, the following standard IP address will be used. **192.xxx.yyy.1** always 1 slot number (1...16) station number (1...16) Standard IP address	–
NetName	Network name of the EM2xx module Allowable values: 1 to 19	– (disabled)
Priority	Defines the priority of the background task that is responsible for copying frames from the Ethernet controller. If the modules EM203, EM213 and EM213❄ are used on a FASTBUS substation, then priorities with a value < 96 are not permitted. **i** If the priority for modules EM203, EM213 and EM213❄ on a FASTBUS substation is set < 96 this will be corrected automatically when loading the driver. Allowable values: 53 to 255	"96" (disabled)
UseGateways	Activates the gateway configuration. • **YES** Gateways can be configured. • **NO** Gateways cannot be configured.	"NO"

[1] Name of parameter (SolutionCenter) and keyword (`mconfig.ini`) are identical

9.1.3.2 Subgroup Gateway 0x

Additional settings are possible by using the following subgroups.

Parameter [1]	Description / possible values	Default
DestinationX [2]	Specifies which network addresses should be sent to the appropriate gateway (defined in **GateAddressX**). The keyword is only valid if **UseGateways** is set to **YES**. If more than 3 different gateway configurations are necessary, up to 9 gateways can be configured in the configuration file `mconfig.ini`.	"0.0.0.0"
DestMaskX [2]	Optionally, a network mask can also be defined for parameter `DestinationX`. If not indicated, it is automatically determined and used based on the IP class of `DestinationX`. The network mask must be entered as a character string in the form `255.255.255.0`. The keyword `DestMaskX` is only available starting M-BASE 3.85.	– (disabled)
GateAddressX [2]	Specifies the gateway for the network addresses given in **DestinationX**. The keyword is only valid if **UseGateways** is set to **YES**. If more than 3 different gateway configurations are necessary, up to 9 gateways can be configured in the configuration file `mconfig.ini`.	Gateway 01: "192.0.1.101" Gateway 02 & 03: "0.0.0.0"
[1] Name of parameter (SolutionCenter) and keyword (`mconfig.ini`) are identical		
[2] The **X** serves as a placeholder for the channel numbers.		

Example

```
[DRIVERS]
   (Card4)
      DriverName = em2xx
      NetAddress = 192.168.0.25:ffffff00
      Priority = 96
      UseGateways = YES
      Destination1 = 11.0.0.0
      DestMask1 = 255.255.0.0
      GateAddress1 = 192.168.0.1
      Destination2 = 10.0.0.0
      DestMask2 = 255.255.255.0
      GateAddress2 = 192.168.0.2
      Destination3 = 0.0.0.0
      GateAddress3 = 192.168.0.3
```

9.1.4 Application programming interface (API) – EM2xx

Description of the programming interface see **API-Documentation**, section **MSys > Modules > I/O-Drivers**.

12.4 SLC284 (Safety processor module)

The SLC284 is used for the setup of controllers for safety applications.

In addition the instructions in the safety manual **Safety controller SLC284** must also be complied with.

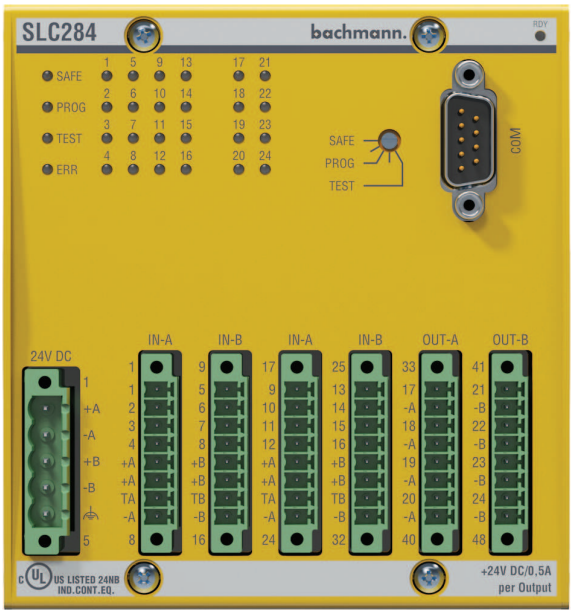

Fig. 407: SLC284

Modules for the extended temperature range (ColdClimate) have a ❄- symbol on the front.

12.4.1 Technical data

12.4.1.1 General

	SLC284	SLC284 ❄
Dimensions (W x H x D) [mm]	110 x 119 x 61	
Operating modes	SAFE, PROG, TEST Adjustable using safe, dual-channel rotary switch	
Degree of protection	IP 20 according to IEC 60529 (protected against touching with standard finger)	
Protection class	Protection class III The device is designed and approved for connection to SELV/PELV circuits.	
EMC check	According to IEC 61000-6-4:2006 + AMD1:2010 CSV standard (Emitted interference) According to IEC 61000-6-2:2005, IEC 61000-6-7:2014, IEC 61326-3-1:2008, IEC 61131-6:2012 (interference immunity)	
Vibration test	According to IEC 61131-2:2007 Standard	
Shock test		
❄ ColdClimate design		

Tab. 882: Technical data - general

IEC 61131-2 and IEC 61000-6-2, evaluation criterion B

While there is an influencing effect, the safe state is set if the internal diagnostics detects an error. If no error is detected, operation is restored in accordance with the specification. If the safe state is present, it remains intact until the user intentionally ends this operating state and operation is restored in accordance with the specification.

Processor + memory

	SLC284	SLC284 ❄
CPU	LPC2468	
Clock speed	72 MHz	
Internal system memory	512 kB	
Working memory SRAM	64 kB	
FLASH program memory	1 MB	
Program cycle time	≥ 5 ms ≥ 6 ms when using distributed safety modules	
❄ ColdClimate design		

Tab. 883: Technical data - Processor + memory

Communication interface

		SLC284	SLC284 ❄
COM		1 x RS232	
Settings	Baud rate	19,200	
	Flow control	None	
	Data bits	8	
	Stop bits	1	
	Parity	None	
❄ ColdClimate design			

Tab. 884: Technical data - Interfaces

Digital inputs

	SLC284	SLC284 ❄
Quantity	16 inputs or 8 redundant inputs in 2 galvanically isolated blocks	
Type according to EN 61131-2	Type 1	
Input voltage	nominal +24 V (+18 to +34 V)	
Low-level	-34 to +5 V	
High-level	+15 to +34 V	
Input delay - Hardware	300 µs	
Input delay - Software	1 ms at disabled pulsing	
Input current	≥ 3.5 mA at +24 V	
Test pulse	1 ms shorter than the program cycle time. e.g.: program cycle time = 10 ms → test cycle= 9 ms See also safety manual **Safety controller SLC284**, Chapter **Operation** > **Pulse**.	
❄ ColdClimate design		

Tab. 885: Technical data - digital inputs

Digital outputs

		SLC284	SLC284 ❄
Quantity		8 outputs or 4 redundant outputs in 2 galvanically isolated blocks	
Output voltage		nominal +24 V (+18 to +34 V)	
Output current per channel		nominal 500 mA ≤ 750 mA	
Output current per block		≤ 2 A	
Switching frequency		≤ 500 Hz at pure ohmic load	
Switching delay	Low -> High	≤ 35 µs at full load	
	High -> Low	≤ 155 µs at full load	
On-Position		Outputs at 0 (safe state)	
Off-delay per channel (configurable)[1)]		0 to 1,800 s (adjustable in 0.1 second steps) See also safety manual **Safety controller SLC284**, Chapter **Operation** > **Time delayed shutdown of the safety outputs**.	
Short circuit capability		Yes, permanent	
Behavior at overload		Outputs are set to 0 (safe state)	
Test pulse		850 µs See also safety manual **Safety controller SLC284**, Chapter **Operation** > **Pulse**.	

[1)] Firmware ≥ Version 1.02 required
❄ ColdClimate design

Tab. 886: Technical data - digital outputs

Ambient conditions

		SLC284	SLC284 ❄
Temperature	Operation	-30 to +60 °C (standard install position) [1] -30 to +55 °C (other install position)	
	Storage	-40 to +85 °C	
Relative humidity	Operation	5 to 95 % without condensation	5 to 95 % with condensation
	Storage		
Pollution degree		I (no or only dry, non-conductive contamination)	II (Usually nonconductive contamination. Occasionally, however, conductivity due to condensation can be expected.)
Altitude limits		4,500 m above sea level (operation) [2]	

[1] Standard installation position see (→ *Chapter 2.1, Page 7-10*)

[2] For operation at an altitude of 2,000 m above sea level, a derating of -0.5 Kelvin per 100 m to a maximum altitude of 4,500 m above sea level must be taken into account.

❄ ColdClimate design

Tab. 887: Technical data - Ambient conditions

Internal power supply

	SLC284	SLC284 ❄
Power supply	Via BS2xx backplane + external	
Current consumption via backplane (+5 V)	650 mA (up to KR:109000) 550 mA (from KR:110000)	
Galvanic isolation between blocks	Yes, up to 500 V	
Galvanic isolation for the system		
❄ ColdClimate design		

Tab. 888: Technical data - Internal power supply

External power supply

External power supply	Description
Input voltage, nominal	+24 V (SELV/PELV)
Input voltage, range	+18 to +34 V
Input voltage Maximum value, t < 1 s / min	+40 V
Current consumption	typically 115 mA at +24 V + ∑ current consumption of the encoders and sensors
Reverse polarity protection	Yes

Tab. 889: Technical data - External power supply

The control system's overall power consumption must not exceed the power supply's capacity.

12.4.1.2 Safety-related parameters

Parameter	Value
Maximum Performance Level according to ISO 13849-1	PL e with category 4
Maximum Safety Integrity Level according to IEC 62061	SIL 3
Safe state	Closed current principle
DC	96.35 %
SFF	99.42 %
$MTTF_d$	226.31 years
β	1 %
PFD (single-channel use of the inputs and outputs, operating time = 20 years)	9.188×10^{-4}
PFH (single-channel use of the inputs and outputs, operating time = 20 years)	1.105×10^{-8}
PFD (two-channel use of the inputs and outputs, operating time = 20 years)	1.548×10^{-4}
PFH (two-channel use of the inputs and outputs, operating time = 20 years)	2.365×10^{-9}

Tab. 890: Safety-related parameters SLC284

The safety processor module SLC284 according to EN 61508-2 (safety integrity of the hardware) must be classified as Type B.

Parameters for other operating times and circuitry variants (e. g. combination SLC + SDI + SDO + SCT)must be obtained from Bachmann electronic GmbH.

Life time

The safety modules are designed for maximum service life of 20 years (from date of manufacture).

The date of manufacture is visible in the safety module's module data in the **Device Manager**.

During this period also not defective safety modules have to be exchanged.

12.4.2 Status indication

RDY

The RDY status indication indicates whether the M1 controller's processor module has detected the SLC284 as a module. This is only relevant to the **Integrated** version of the application.

See safety manual **Safety controller SLC284**, Chapter **Getting started**.

LED	Status	Description
RDY (yellow)	ON	M1 processor module can communicate with the module.
	OFF	M1 processor module could not establish communication with the module or a problem occurred when loading the driver. See logbook for further information.
	Flashes	Error M1 processor module can communicate with the module, but the module did detect an error, e.g. cable break or voltage failure. The fault can be evaluated by the application software.

Tab. 891: RDY status indication

Operating modes

LED	Status	Description
SAFE (green)	Flashes	•  (500 ms / 500 ms) A new application was successfully copied to the SLC284. The LED flashes 5 times. •  (1 s / 1 s) The SLC284 is waiting for the request to start the application. •  (950 ms / 50 ms) The SLC284 is in the safe operating mode. The flashing indicates that the indicator is still functioning as intended.
	OFF	The SLC284 is not in the safe operating mode.
PROG (yellow)	ON	The SLC284 is in PROG operating mode.
	OFF	The SLC284 is not in PROG operating mode.
TEST (yellow)	ON	The SLC284 is in TEST operating mode.
	OFF	The SLC284 is not in TEST operating mode.
ERR (red)	ON	A severe internal system error (e. g., access to invalid memory area) has occurred. The SLC284 is in the safe state. See also safety manual **Safety controller SLC284**, Chapter **Safe state**.
	Flashes	•  (100 ms / 100 ms) An error that requires the safe state has occurred. The SLC284 is in the safe state. • 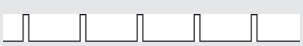 (100 ms / 900 ms) The SLC284 is in the BIOS (during start-up).
	OFF	No error has occurred.

Tab. 892: Status indication



For description of the operating modes see safety manual **Safety controller SLC284**, chapter **Operating modes**.

LED function check

The SAFE and ERR status indications are controlled by the system software of the SLC284. They briefly light up when booting the SLC284 so that one can check whether the LEDs are intact.

The PROG and TEST status indications are directly controlled by the rotary switch and therefore must always light up when the rotary switch is in the corresponding position.

12.4.3 Pin assignments

To make redundant wiring possible, the connections of the SLC284 (inputs, outputs and external power supply) are divided into two blocks (A and B) that are galvanically isolated from each other.

See safety manual **Safety controller SLC284**, Chapter **Getting started** > **Wiring**.

Communication interface

D-Sub 9-pin (male) – the connector on the module is described:

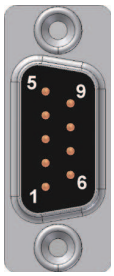

Pin	Signal	Description
1	n. c.	not connected
2	RxD	Receive Data
3	TxD	Transmit Data
4	n. c.	not connected
5	GND	Ground
6	n. c.	not connected
7	n. c.	not connected
8	n. c.	not connected
9	n. c.	not connected

Tab. 893: Pin assignment – SLC284 communication interface

Digital inputs

	Pin	Signal		Pin	Signal		Pin	Signal		Pin	Signal	
	IN A			IN B			IN A			IN B		
	1	1	Input 1	9	5	Input 5	17	9	Input 9	25	13	Input 13
	2	2	Input 2	10	6	Input 6	18	10	Input 10	26	14	Input 14
	3	3	Input 3	11	7	Input 7	19	11	Input 11	27	15	Input 15
	4	4	Input 4	12	8	Input 8	20	12	Input 12	28	16	Input 16
	5	A+	Supply	13	B+	Supply	21	A+	Supply	29	B+	Supply
	6	A+	Supply	14	B+	Supply	22	A+	Supply	30	B+	Supply
	7	TA	Pulse pin	15	TB	Pulse pin	23	TA	Pulse pin	31	TB	Pulse pin
	8	A-	Ground (GND)	16	B-	Ground (GND)	24	A-	Ground (GND)	32	B-	Ground (GND)

Tab. 894: Pin assignment – SLC284 digital inputs

Pins designated **A-** and **A+** are supplied by the A block power supply. Pins designated **B-** and **B+** are supplied by the B block power supply.

Digital outputs

Each output consists of 2 connections (output signal + ground).

	Pin	Signal	Description	Pin	Signal	Description
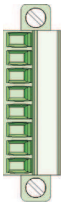	OUT A			OUT B		
	33	17	Output 1	41	21	Output 5
	34	A-	Ground (GND)	42	B-	Ground (GND)
	35	18	Output 2	43	22	Output 6
	36	A-	Ground (GND)	44	B-	Ground (GND)
	37	19	Output 3	45	23	Output 7
	38	A-	Ground (GND)	46	B-	Ground (GND)
	39	20	Output 4	47	24	Output 8
	40	A-	Ground (GND)	48	B-	Ground (GND)

Tab. 895: Pin assignment - digital outputs SLC284

Pins designated **A-** are supplied by the A block power supply. Pins designated **B-** are supplied by the B block power supply.

External powersupply

	Pin	Signal	Description
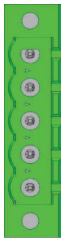	1	A+	Power supply Block A
	2	A-	
	3	B+	Power supply Block B
	4	B-	
	5	⏚	Shield (functional ground)

Tab. 896: Pin assignment - SLC284 external power supply

12.4.4 Configuration

Opening the configurator

Use Device Manager for the configuration.

→ *Chapter 10.4 "Configuring a hardware module", Page 13-269*

▶ Double-click the hardware module in navigator view.

➔ Configurator view opens.
The group "Basic configuration" is selected by default.

Carrying out the configuration

Requirements

Configurator view must have been opened.

Procedure:

1. Make changes.
   For detailed information on the parameters see the following chapters.

2. Save changes with .

➔ The configuration is entered in the `mconfig.ini` file (→ *Chapter 5, Page 17-149*).

12.4.4.1 Group "Basic configuration"

The **x** serves as a wildcard for the channel number (1 to n).

Parameter	Description / possible values	Default
CardNumber	Defines the logical module number by which the application programs address the module. Is assigned automatically, but an application specific value can also be entered. Every CardNumber assigned in the system must be unique. Allowed values: 1 to 32,000	Slot Number (SlotNb) (Automatic)
SlotNb	Defines the slot number Is assigned automatically, however a user-specific value can also be entered. Allowable values: 1 to 16	(Automatic)
StationNb	Defines the station number Is assigned automatically, however a user-specific value can also be entered. Allowable values: 1 to 16	(Automatic)
DriverName	The name of the module driver that is used to check the MIO-handler. Is added automatically (cannot be configured)	(Automatic)
CardName	Used to select the module variant type. Depending on the selected module, different keywords are hidden or revealed. In virtual operation **CardName** determines which module variant will be simulated. • **SLC284** SLC284 is used. • **SDI208** SDI208 is used. • **SDO204** SDO204 is used.	"SLC284 / SDI208 / SDO204"
Mode	Operating mode of the module; possible values:	"Real"
	Real Real hardware module that is mounted on the M1 controller	
	Virtual Hardware module physically not present on the M1 controller Input channels can only be read, output channels can be read and written	
	VirtualRW Hardware module physically not present on the M1 controller Input and output channels can be read and written	
CtrlTaskPriority	Working task priority on the M1 controller.	"30"
ConfigPriority	Working task priority on the M1 controller.	"120"

Parameter	Description / possible values	Default
AutoStartSafeOp	Specifies whether the application is to be started automatically. • **0** The application has to be started via the **mio_SetCardMode** function following a restart of the safety processor module. Call: `mio_SetCardMode(DrvId, MIO_M_SAFETY_SAFE);` • **1** The application is started automatically following a restart of the safety processor module.	– (disabled)
SviAccessError	Response when a read or write error occurs in an SVI variable of another SVI server during operation. • **UseZero** 0 is returned for a read error. Write errors are ignored. • **OldVal** The previous value is returned for a read error. Write errors are ignored. • **ERROR** The safety processor module switches to the safe state. The SVI variable addresses are searched only during startup of the safe application. The addresses are not checked during the application's runtime. If the connection to the SVI variable is lost, the action configured (UseZero, OldVal or Error) is executed. The safety processor module has to be restarted in order to recover the connection to the SVI variable. If an SVI variable is not present during startup of the safe application, the application is not started, independent of the configuration.	"UseZero"
DebugMode	Enables the bit-coded activation of additional debug messages: • **0x0** Only errors are entered into the logbook. • **0x1** Errors and warnings are entered into the logbook. • **0x2** The current state of the logbook's memory is read out during startup. • **0x4** Debug messages (information) about Safety-over-Xnet are entered into the logbook. Debug messages influence runtime behavior and can lead to an overrun of the program cycle time. In safe mode the safety processor module switches to the safe state during an overrun.	"0"
Overview (über die Kanäle)	In this range, every channel can be enabled/disabled and the symbolic channel name can be modified. ChanNameX: Optional symbolic designation for a channel.	–

Parameter	Description / possible values	Default
	Permitted number of characters: 63	

Example

```
[DRIVERS]
  (Card6)
        SlotNb           = 6
        StationNb        = 1
        Mode             = Real
        DriverName       = safety
        CardName         = SLC284
        ChanName1        = "EmergencyStop1"
        ChanName2        = "EmergencyStop2"
        CtrlTaskPriority = 48
        ConfigPriority   = 120
        AutoStartSafeOp  = 1
        SviAccessError   = UseZero
        DebugMode        = 0x0
```

12.4.5 Application programming interface (API) – SLC284

Description of the programming interface see **API-Documentation**, section **MSys > Modules > I/O-Drivers**.

4.7 MX2xx/x (Processor Module)

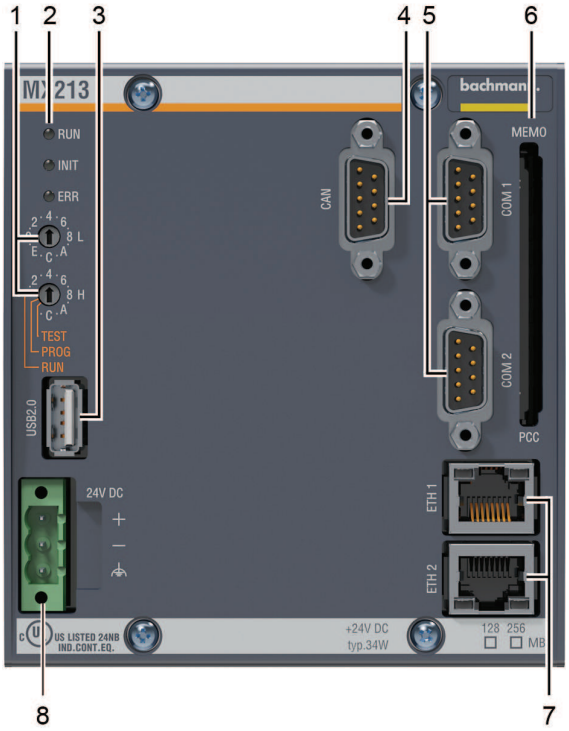

Fig. 65: MX2xx/x – Mechanical construction (overview)

1) Hex rotary switch
2) Processor status LEDs
3) USB interface
4) CAN interface
5) COM interfaces (2x)
6) PC card slot
7) Ethernet interfaces (2x)
8) POWER interface (power supply)

Description	Option	Type
MX2xx	-	Standard version
	/W	Cold weather design (storage under thawing conditions possible)
	❄	ColdClimate (Operation and storage under thawing conditions possible)

Tab. 130: Type code

Modules for the extended temperature range (ColdClimate) have a ❄- symbol on the front.

4.7.1 Technical data

Processor + memory

As from ER 140

Processor module		MX207[1)]	MX213	MX213/W	MX213 ❄	MX220 MX220 ❄
CPU		x86				
Clock speed		267 MHz	267 MHz			433 MHz
	Pentium equivalent	> 66 MHz	133 MHz			200 MHz
Data memory NVRAM		512 kB Data retention assured for > 10 years SRAM/EEPROM has unlimited write cycles				
Working memory DRAM		256 MB				
FLASH program memory		64MB	16 MB			
		100.000 write/delete cycles with Wear-Leveling				
Program memory PC card		–	16 / 32 / 64 MB			
Mass storage CF card		–	Type I Maximum available capacity available for use			
BIOS		On the 2 MB Flash EPROM 100.000 write/delete cycles with Wear-Leveling				
[1)] To ER 160: 16 MB						

Tab. 131: MX2xx/x –Processor + memory

NOTICE

The effect of force on the PC card in the PC card slot is too great.

Printed board in the processor module can be damaged!

▶ When shipping and setting up the processor module, remove the PC card from the PC card slot.

The integrated rechargeable battery is required for the operation of the RTC in the processor module's idle state and keeps time for approx. 6 months in the temperature range from 0 to +60 °C (for temperatures outside this range no guaranteed information is obtainable). Therefore, processor modules can be stored for ≤ 6 months in a powerless state without time loss. The NVRAM is not supplied by the rechargeable battery.

The recharging of an empty rechargeable buffer battery takes approx. 48 hours. The rechargeable battery is normally discharged through Bachmann electronic GmbH at delivery.

Further information

For the risks and general configuration principles of storage media, also see
→ *Chapter 1.1 "Technical measures", Page 2-2*

To ER 140

Processor module	MX207	MX213	MX213/W	MX213 ❄
CPU	x86 (Pentium equivalent)			
Clock speed	133 MHz	267 MHz		
Pentium equivalent	66 MHz	133 MHz		
Data memory NVRAM	512 kB (SRAM, buffered with rechargeable battery) Data preservation assured for < 3 months			
Data memory NVRAM1	–	64 kB Data retention assured for > 10 years		
Working memory DRAM	32 MB			
FLASH program memory	4 MB (system software)			
Program memory PC card	–	16 / 32 / 64 MB		
Mass storage CF card	–	Type I Maximum available capacity available for use		
BIOS	On the 2 MB Flash EPROM			
❄ ColdClimate design				

Tab. 132: MX2xx/x – Processor + memory

The rechargeable battery has a typical lifetime of 10 years.

Interfaces

Processor module	MX207	MX213	MX213/W	MX213 ❄	MX220 MX220 ❄
COM1 (serial)	RS232 (reduced signal set), RS422 or RS485 [1]	RS232C with complete signal set			
COM2 (serial)	–	RS232 (reduced signal set), RS422 or RS485			
ETH (Ethernet)	1 x Ethernet 10/100BaseTX (10/100 MBit/s, twisted pair, autocross detection)	2 x Ethernet 10/100BaseTX (10/100 MBit/s, twisted pair, autocross detection)			
USB	1 x USB 1.1 / USB 2.0[2] (→ *Chapter 16, Page 4-1625*)				
CAN[3]	1 x 10 kBit/s to 1 MBit/s				

[1] To ER 160 designed as RS232 with complete signal set.
[2] As from ER 140
[3] Galvanically isolated from the system
❄ ColdClimate design

Tab. 133: MX2xx/x – Interfaces

Additional characteristics

Processor module	MX207	MX213	MX213/W	MX213 ❄	MX220 MX220 ❄
Watchdog	Yes				
Synchronization pulse	Yes				
Real Time Clock (RTC)	Precision ±20 ppm at +25 °C, battery-buffered				
Operating modes	Two 16-position hex rotary switches **H/L** for the 224 selectable network addresses and operating modes **RUN**ning, **TEST**ing and **PROG**ramming				
❄ ColdClimate design					

Tab. 134: MX2xx/x – Additional characteristics

The accuracy of a clock crystal (RTC) is dependent on the temperature. A frequency tolerance of ±200 ppm together with the basic tolerance of ±20 ppm results across the entire temperature range. The larger or broader the temperature range during use, the greater the influence of temperature. The influence on applications in machine halls with relatively even ambient temperature is correspondingly low and can usually be ignored.

If several processor modules should process data synchronously, it is recommended that you synchronize the processor modules clocks using the corresponding network protocols and trace back to a time base (time server). The SNTP or PTP ((→ *Chapter 2.5, Page 17-29*)) are suitable for this for example.

The time base itself can be synchronized using suitable time devices (GPS receiver, Internet time bases).

Ambient conditions

Processor module		MX2xx	MX213/W	MX213 ❄	MX220 ❄
Temperature	Operation	-30 to +60 °C (standard install position) [1)] -30 to +55 °C (other install position)			
	Storage	-40 to +85 °C			
Relative humidity	Operation	5 to 95 % without condensation		5 to 95 % with condensation	
	Storage	5 to 95 % without condensation	5 to 95 % with condensation		

[1)] Standard installation position see (→ *Chapter 2.1, Page 7-10*)

❄ ColdClimate design

Tab. 135: MX2xx/x – Ambient conditions

> The cold weather design has an extended storage temperature range up to -40 °C and a partial coat of lacquer for the printed circuit boards for protection from short circuit of the rechargeable battery buffered areas when thawing.
>
> In the ColdClimate design, the PCBs are coated for protection against condensation.

Power supply

Processor module		MX207	MX213	MX213/W	MX213 ❄	MX220 MX220 ❄
Power supply		Integrated power supply (→ *Chapter 4.7.4, Page 4-163*)				
Current consumption via backplane	+5 VDC	1,400 mA	1,700 mA			
	+15 VDC	30 mA				
	-15 VDC					
❄ ColdClimate design						

Tab. 136: MX2xx/x – Power supply

> The specified current consumption via the bus also applies for use of a separate power supply module. The stated value is a maximum value and depends on the usage of the interfaces such as USB devices.

Error messages

Error message	Effect
Software watchdog	Controller restart regardless of conditions
Processor excess temperature	Entry in the logbook
Failure of the rechargeable battery [1)]	The NVRAM will be deleted at the next boot[1)]
[1)] To ER 140	

Tab. 137: MX2xx/x – Error messages

4.7.2 Status indication

RUN, INIT, ERR

RUN (green)	INIT (yellow)	ERR (red)	Description
OFF	OFF	OFF	Power supply off
OFF	ON	OFF	Boot procedure running Duration: typically 15 to 60 seconds depending on the CPU, control setup, configuration and application behavior
OFF	ON	ON	The controller is started with the switch setting **Test**/**Prog** and then waits for the request from the MBoot command: → *Chapter 4.2 "Working with MBoot commands ", Page 10-25*
ON	OFF	OFF	Controller booting finished successfully and ready
OFF	OFF	ON	Boot procedure aborted due to an error (see message on console)

Tab. 138: Status indication

Ethernet

LED	Status	Description
LinkPuls (green)	Flashes	Data is being transferred
Speed (orange)	ON	Interface is working with maximum data transmission rate

Tab. 139: Ethernet status indication

4.7.3 Pin assignments

Connectors are shown as seen from the cable, not from the module side!

COM1

D-Sub 9 pin (female)

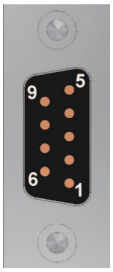

Pin	Signal	Description
1	DCD	Data Carrier Detect
2	RxD	Receive Data
3	TxD	Transmit Data
4	DTR	Data terminal ready
5	GND	Ground (over 100 Ω PTC resistance)
6	DSR	Data Set Ready
7	RTS	Request To Send
8	CTS	Clear To Send
9	RI	Ring Indicator

Tab. 140: Pin assignment for RS232C

COM2

NOTICE

Damage from connecting a standard null modem cable to the combined interface (COM 2)!

Destruction of the interface by signal short circuit!

▶ Only use approved wiring.

→ *Chapter 4.8.4 "Modem cable for combined interfaces", Page 8-37*
→ *Chapter 4.8.5 "Data cable for combined interfaces", Page 8-38*

The modules already contain a terminating resistor for the RS485 interface. Therefore the module must be placed at the end of an RS 485 network.

D-Sub 9 pin (female)

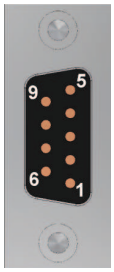

Pin	Signal	RS232	RS422	RS485	Description
1	TxD+	-	X	-	Transmit Data +
2	RxD	X	-	-	Receive Data
3	TxD	X	-	-	Transmit Data
4	TxD-	-	X	-	Transmit Data -
5	GND	X	X	X	Ground (over 120 Ω PTC resistance)
6	RxD+	-	X	-	Receive Data +
	RXD+/TXD+	-	-	X	Receive Data +/Transmit Data +
7	RTS	X	-	-	Request To Send
8	CTS	X	-	-	Clear To Send
9	RxD-	-	X	-	Receive Data -
	RxD-/TxD-	-	-	X	Receive Data - / Transmit Data -

Tab. 141: Pin assignment for reduced RS232/RS422/RS485

ETH

RJ45

	Pin	Signal	Description
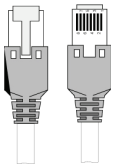	1	TxD+	Transmit Data +
	2	TxD-	Transmit Data -
	3	RxD+	Receive Data +
	4	n. c.	not connected
	5		
	6	RxD-	Receive Data -
	7	n. c.	not connected
	8		

Tab. 142: Pin assignment Ethernet connector

USB

USB

	Pin	Signal	Description
	1	+5 VDC	Supply voltage
	2	D -	Data -
	3	D +	Data +
	4	GND	Ground

Tab. 143: Pin assignment for USB connector

CAN

The signals shown in brackets are not used by the module and have no influence on the module function. They are looped through between the connectors in order to ensure conformity with standards.

The module at the end of a bus must be fitted with a bus terminating connector having a resistor (123 Ω) between the signals CAN-H and CAN-L. The resistor is not integrated in the module.

D-Sub 9 pin (female)

	Pin	Signal	Description
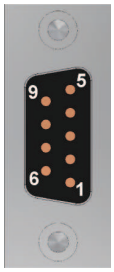	1	n. c.	not connected
	2	CAN_L	CAN_L Bus Line Dominant Low
	3	CAN_GND	CAN Ground
	4	n. c.	not connected
	5	(CAN_SHLD)	Optional CAN Shield
	6	GND	Optional Ground
	7	CAN_H	CAN_H Bus Line Dominant High
	8	n. c.	not connected
	9	(CAN_V+)	Optional CAN External Positive Supply: Neutral line without connection to the internal CAN interface. For the CM202 this line can be connected between CAN 1 and CAN 2 via the DIP switches.

Tab. 144: Pin assignment for CAN connection

4.7.4 Integrated power supply unit (MX2xx/xN)

The integrated power supply is galvanically isolated and generates the voltages for the backplane.

If an NT2xx power supply unit exists on the backplane, the integrated power supply is switched off even if the NT2xx is not in operation.

Integrated power supply		Description
Input voltage, nominal		24 VDC
Input voltage, range Inclusive possible ripple		18 to 34 VDC
Input voltage, Maximum value, t < 1 s/min		40 VDC
Input current, switch on		≤ 5 A after 5 ms
Input capacitance, switch on		typ. 1300 µF
Current consumption (with maximum bus load)		typ. 1400 mA at 24 VDC
Powerfail warning after interrupt of the input voltage		typically after 3 ms
Ripple, allowable		≤ 2,4 V_{ss} wit 100 Hz
Bridging of interrupts in the input voltage		≥ 10 ms ≤ 1x / s
Current for I/O modules / output voltage	+5 VDC	2,000 mA
	+15 VDC	250 mA
	-15 VDC	200 mA
Reverse polarity protection		Yes
Galvanic isolation ext. voltage supply / system		Yes, up to 500 V
Galvanic isolation ext. voltage supply / earth		Yes, up to 100 V

Tab. 145: Integrated power supply unit (MX2xx/xN)

Switch on

The input current surge when switching on depends on the external power supply and the wiring.

Source and line resistance limit the peak value of the inrush current and together with the input capacity also determine its duration.

Galvanic isolation

The galvanic isolation does not fulfil any protective function.

Functional ground and housing are connected inside the module. The secondary ground is connected to the functional ground as well as the housing.

5 Digital Input/Output modules

5.1 DI2xx/x (Digital Input Modules)

The digital input modules DI2xx/x are suitable for reading input signals from sensors or switches that work digitally.

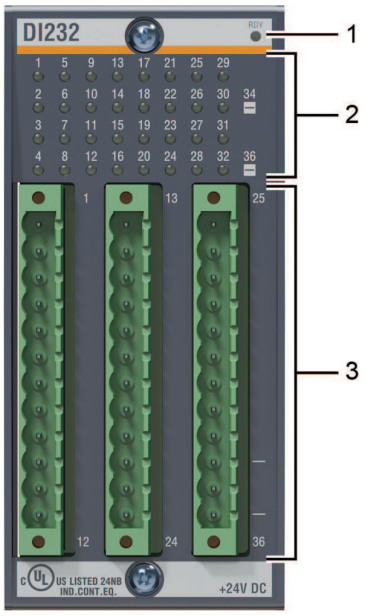

Fig. 66: DI2xx/x – Mechanical construction (overview)

1) Module ready LED
2) Digital LEDs digital inputs
3) Digital inputs

Modules for the extended temperature range (ColdClimate) have a ❄- symbol on the front.

5.1.1 Technical data

- 12, 16 or 32 digital input channels
- Status indication for each channel via LED
- Current sink inputs > 2 mA in accordance with EN61131 Typ-1
- Sink/Source inputs on the DI232/np1 module

As many digital input modules as there are module slots may be used in a controller system. Other combinations with other input / output modules are permitted. However, the maximum performance of the power supply module must be taken into account.

Inputs

Digital input module	DI216	DI232 DI232 ❄	DI232/np1	DI232/48
Quantity	16	32		
Separate input groups	2		4	2
	1 to 8 9 to 16	1 to 16 17 to 32	1 to 8 9 to 16 17 to 24 25 to 32	1 to 16 17 to 32
Input voltage	Typ. +24 VDC (+18 to +34 VDC)			typ. +48 VDC (+30 to +58 VDC)
Internal resistance	approx. 6 kΩ		approx. 4.7 kΩ	approx. 7.5 kΩ
Low-level	-34 to +5 VDC		$\|U_C - U_{IN}\| < +5$ V	-34 to +10 VDC
High-level	+15 to +34 VDC		$\|U_C - U_{IN}\| > +15$ V	+30 to +58 VDC
Input delay (typically through filter)	3 ms		100 µs	3 ms
Interrupt inputs [1]	≤ 2 (channels 1 and 2)			
Input delay (typ.)	50 µs			20 µs
Trigger edge	Positive			

❄ ColdClimate design

[1] Only the positive edge (0 -> 1) is relevant for triggering the interrupt.

Tab. 146: DI2xx/x – Inputs

Ambient conditions

Digital input module		DI2xx/x	DI2xx/x ❄
Temperature	Operation	-30 to +60 °C (standard install position) [1)] -30 to +55 °C (other install position)	
	Storage	-40 to +85 °C	
Relative humidity	Operation	5 to 95 % without condensation	5 to 95 % with condensation
	Storage	5 to 95 % with condensation	
[1)] Standard installation position see (→ *Chapter 2.1, Page 7-10*) ❄ ColdClimate design			

Tab. 147: DI2xx/x – Ambient conditions

Power supply

Digital input module		DI216	DI232 DI232 ❄	DI232/np1	DI232/48
Power supply		Via BS2xx backplane			
Current consumption via backplane	+5 VDC	70 mA	80 mA		88 mA
Galvanic isolation between groups		Yes, up to 330 V			Yes, up to 500 V
Galvanic isolation for the system		Yes, up to 500 V			
❄ ColdClimate design					

Tab. 148: DI2xx/x – Power supply

⚠ CAUTION

Exchange of digital input modules with inputs with different speeds.

▶ Replace digital input modules (DI232 -> DI232/np1 or DI232/np1 -> DI232) with due consideration of the fact that the faster type DI232/np1 is more sensitive to interference. The DI232 module can filter short input impulses.

The function of inputs 1 and 2 as interrupt channels may be enabled using the software.

With M-BASE V1.08R and higher, a check is performed when starting an application whether the set filter time in the `mconfig.ini` configuration file matches the filter time of the module. Otherwise the application does not start.

5.1.2 Status indication

LED	Status	Description
RDY (yellow)	ON	M1 processor module can communicate with the module.
	OFF	M1 processor module could not establish communication with the module or a problem occurred when loading the driver. See logbook for further information.
	Flashes	Error M1 processor module can communicate with the module, but the module did detect an error, e.g. cable break or voltage failure. The fault can be evaluated by the application software.

Tab. 149: RDY status indication

The blink function of the RDY LED is not implemented for the modules DI216, DI232, and DI232/np1.

5.1.3 Pin assignments

5.1.3.1 DI216

Digital inputs

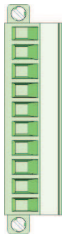

	Connector 1		Connector 2			Connector 3	
	Pin	Signal	Pin	Signal	Description	Pin	Signal
	1	DI1	11	DI11	–	21	24 V_1
	2	DI2	12	DI12	–	22	24 V_1
	3	DI3	13	DI13	–	23	24 V_1
	4	DI4	14	DI14	–	24	24 V_1
	5	DI5	15	DI15	–	25	24 V_1
	6	DI6	16	DI16	–	26	24 V_2
	7	DI7	17	24 V_1	+24 VDC (Inputs 1 to 8)	27	24 V_2
	8	DI8	18	0 V_1	Ground (Inputs 1 to 8)	28	24 V_2
	9	DI9	19	24 V_2	+24 VDC (Inputs 9 to 16)	29	24 V_2
	10	DI10	20	0 V_2	Ground (Inputs 9 to 16)	30	24 V_2

Tab. 150: Pin assignment Digital inputs DI216

The terminals 21 to 30 can be used to power transducers.

5.1.3.2 DI232, DI232/48

Digital inputs

	Connector 1		Connector 2		Connector 3		
	Pin	Sig-nal	Pin	Signal	Pin	Signal	Description
	1	DI1	13	DI13	25	DI25	–
	2	DI2	14	DI14	26	DI26	–
	3	DI3	15	DI15	27	DI27	–
	4	DI4	16	DI16	28	DI28	–
	5	DI5	17	DI17	29	DI29	–
	6	DI6	18	DI18	30	DI30	–
	7	DI7	19	DI19	31	DI31	–
	8	DI8	20	DI20	32	DI32	–
	9	DI9	21	DI21	33	n. c.	not connected
	10	DI10	22	DI22	34	0 V_1	Ground (Inputs 1 to 16)
	11	DI11	23	DI23	35	n. c.	not connected
	12	DI12	24	DI24	36	0 V_2	Ground (Inputs 17 to 32)

Tab. 151: Pin assignment Digital inputs DI232, DI232/48

5.1.3.3 DI232/np1

Digital inputs



	Connector 1		Connector 2		Connector 3		
	Pin	Signal	Pin	Signal	Pin	Signal	Description
	1	DI1	13	DI13	25	DI25	–
	2	DI2	14	DI14	26	DI26	–
	3	DI3	15	DI15	27	DI27	–
	4	DI4	16	DI16	28	DI28	–
	5	DI5	17	DI17	29	DI29	–
	6	DI6	18	DI18	30	DI30	–
	7	DI7	19	DI19	31	DI31	–
	8	DI8	20	DI20	32	DI32	–
	9	DI9	21	DI21	33	C1	Joint reference potential for inputs 1 to 8
	10	DI10	22	DI22	34	C2	Joint reference potential for inputs 9 to 16
	11	DI11	23	DI23	35	C3	Joint reference potential for inputs 17 to 24
	12	DI12	24	DI24	36	C4	Joint reference potential for inputs 25 to 32

Tab. 152: Pin assignment Digital inputs DI232/np1

5.1.3.4 Jack coding

Connecting plugs may be coded corresponding to DIN EN 61131-2 which can prevent the plugs from being mixed up.

→ *Chapter 4.5 "Coding connectors (optional)", Page 8-29*

5.1.4 Input circuits

DI216

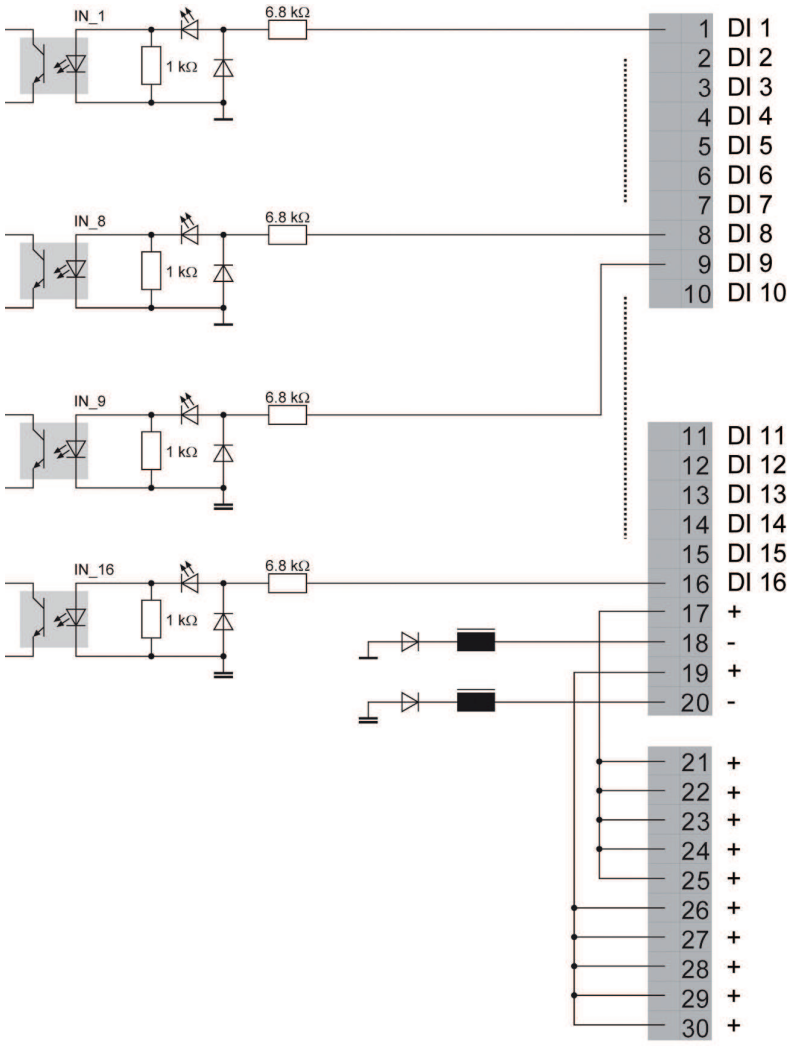

Fig. 67: Input Circuit DI216

DI232

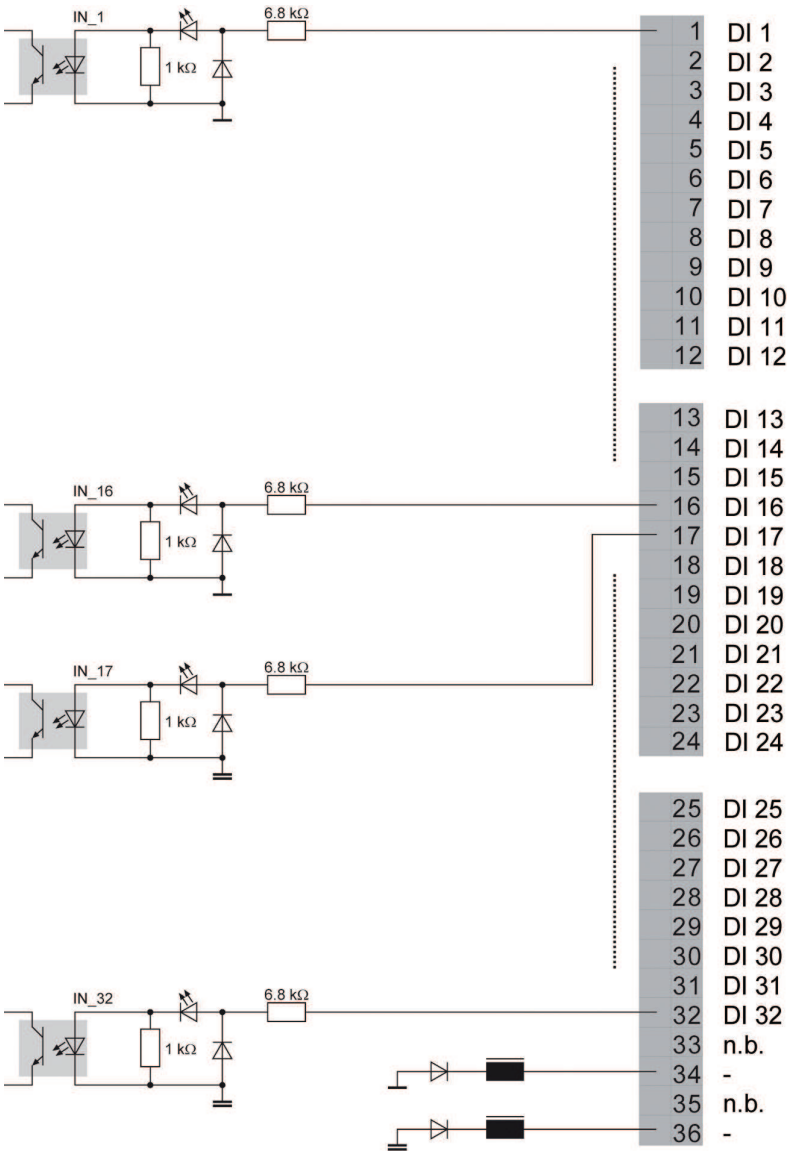

Fig. 68: Input Circuit DI232

DI232/48

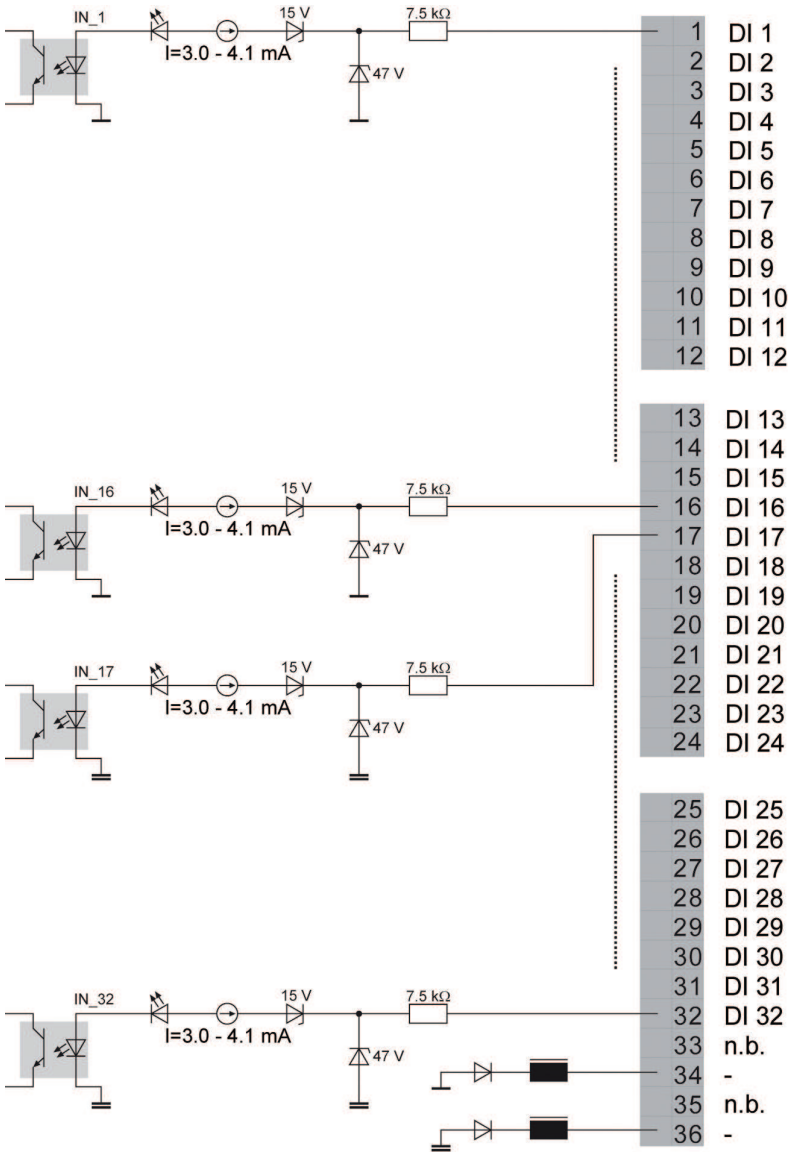

Fig. 69: Input circuit DI232/48

DI232/np1

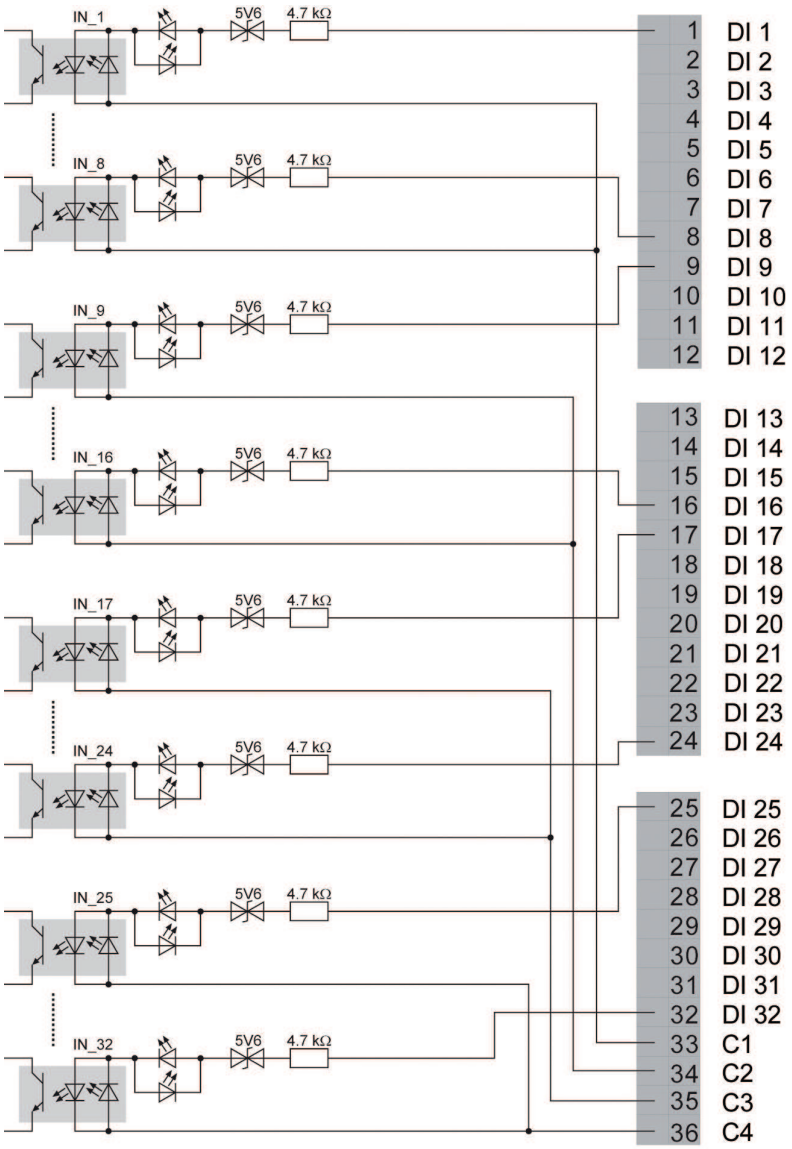

Fig. 70: Input Circuit DI232/np1

5.1.5 Wiring examples

DI216

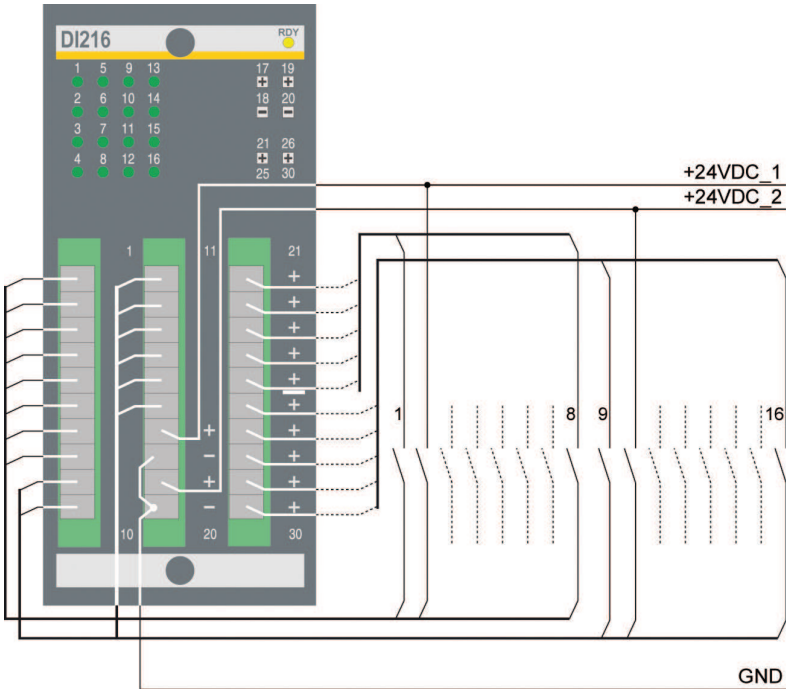

Fig. 71: Wiring Example DI216

DI232

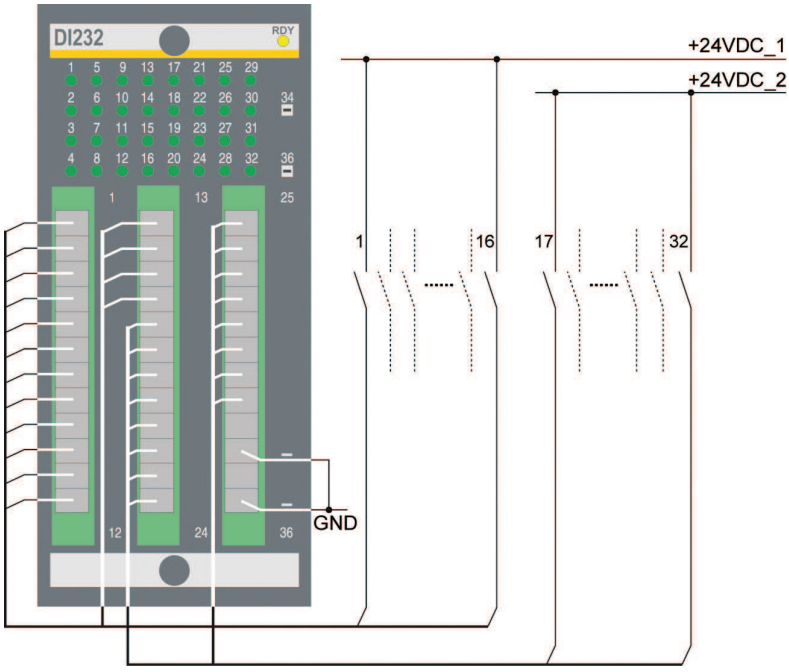

Fig. 72: Wiring Example DI232

DI232/48

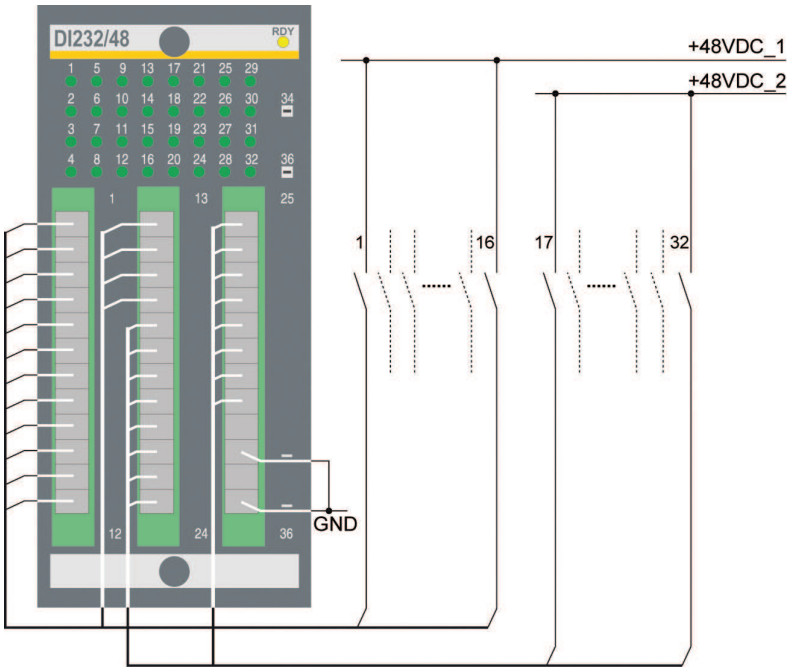

Fig. 73: Wiring Example DI232/48

DI232/np1

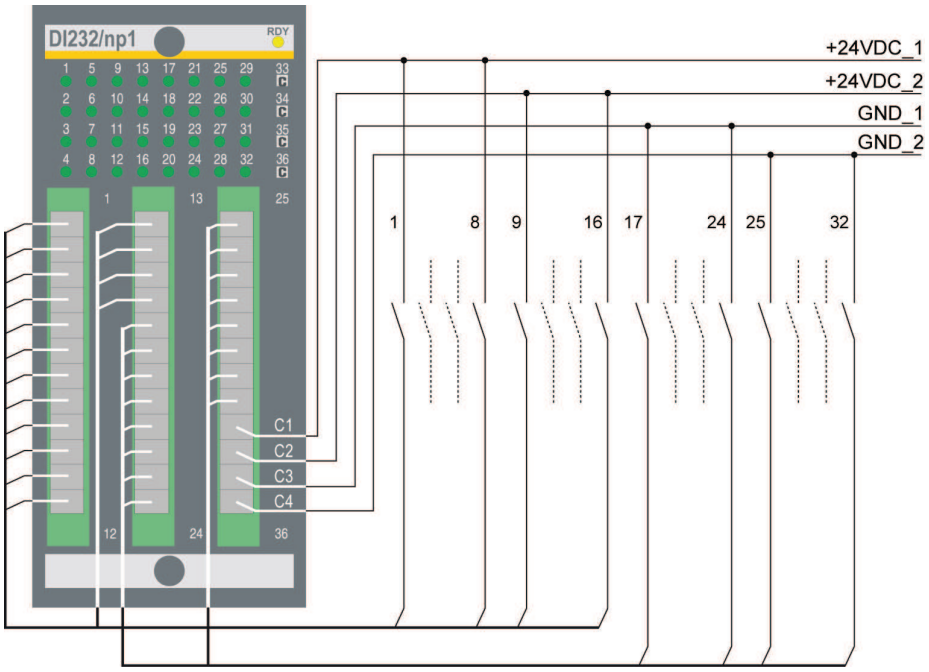

Fig. 74: Wiring Example DI232/np1

5.1.6 Configuration

Opening the configurator

Use Device Manager for the configuration.

→ *Chapter 10.4 "Configuring a hardware module", Page 13-269*

▶ Double-click the hardware module in navigator view.

➔ Configurator view opens.
The group "Basic configuration" is selected by default.

Configure the module

Requirements

Configurator view must have been opened.

Procedure:

1. Make changes.
   For detailed information on the parameters see the following description.
2. Save changes with  .

➔ The configuration is entered in the `mconfig.ini` file (→ *Chapter 5, Page 17-149*).

Parameter [1)]	Description / possible values	Default value
CardNumber	Defines the module number Is assigned automatically, however a separate user value can also be entered Allowed values: 1 to 32,000	Slot Number
SlotNb	Defines the slot number, is assigned automatically Allowed values: 1 to 16	Not configurable
StationNb	Defines the station number, is assigned automatically Allowed values: 1 to 16	Not configurable
Mode	Operating state of the module Allowable values • Real Real hardware module that is mounted on the M1 controller • Virtual Hardware module physically not present on the M1 controller Input channels can only be read, output channels can be read and written • VirtualRW Variant of the operating mode **Virtual** For simulation purposes, inputs are describable via function **mio_SetValue()**	`Real`
DriverName	Name of the module drive will be inserted automatically	DI216,DI232 (depending on the selected module)

Parameter [1]	Description / possible values	Default value
DeviceTag (optional)	Device tag of the hardware module Permitted number of characters: 63	– (disabled)
FilterTime	Only available with DI232/x. Selects the variant of a module with respect to the input filtering. The **FilterTime** only affects the first two inputs of the module (interrupt inputs) if an interrupt is reported (attach). • **Normal** For 3-ms input filter • **Short** For 100-µs input filter	`Normal`
NoRedundantRead	Overwrites the global setting for redundant reading of inputs. • **ON** – No redundant reading of inputs. • **OFF** – Inputs are always read redundantly, regardless of the global setting. • **SYSTEM** – The global settings apply See also **User Manual M-BASE**, **Redundant reading** chapter.	SYSTEM (disabled)
ChanNameX	In this range, every channel can be enabled/disabled and the symbolic channel name can be modified. **x** serves as a placeholder for the channel numbers Permitted number of characters: 63	– (disabled)
[1] Name of parameter (SolutionCenter) and keyword (`mconfig.ini`) are identical		

Example

When using blanks and special characters, the expression must be written in quotation marks (" ").

```
[DRIVERS]
    (Card4)
        DriverName = di232
        FilterTime = Normal
```

5.1.7 Application programming interface (API) – DI2xx/x

Description of the programming interface see **API-Documentation**, section **MSys** > **Modules** > **I/O-Drivers**.

5.1.7.1 Application examples

Monitoring of an Input

Whether the values of two determined inputs are 1 (e.g. 2-button confirmation by the machine operator) is to be tested.

```
#include <mio_e.h>

SINT32 xxx_TestAcknowledge(UINT32 Card1, UINT32 Chan1,
                           UINT32 Card2, UINT32 Chan3)

{
     VOID *DrvId1;
     VOID *DrvId2;
     SINT32 Value1 = 0;
     SINT32 Value2 = 0;

     /*--- determine Id of the I/O modules ---*/

     DrvId1 = mio_GetDrv(Card1);

     if (DrvId1 == 0)
     {
         log_Err("XXX_TESTACK: Can't get driver-ID!");
         return (0);
     }

     DrvId2 = mio_GetDrv(Card2);

     if (DrvId2 == 0)
     {
         log_Err("XXX_TESTACK: Can't get driver-ID!");
         return (0);
     }

     /*--- read and compare inputs ---*/

     mio_GetValue(DrvId1, Chan1, &Value1);
     mio_GetValue(DrvId2, Chan2, &Value2);

     if (Value1 == 1 && Value2 == 1)
         return (1);                /* both inputs 1 */
     else
         return (0);
}
```

Using the interrupt ability of a channel

The releasing of the emergency off button triggers a positive edge on module 1/ channel 2. This event should be detected and processed using an interrupt.

```
#include <mio_e.h>

MLOCAL UINT32 xxx_SessId = -1;   /* session for interrupt
                                    coupling */
VOID xxx_ProcEmergency(VOID *DrvId, UINT32 Chan,
                       UINT32 Event, UINT32 Para)

{
     /*--- treatment of the emergency stop ---*/
             :
             :
}

SINT32 xxx_InitEmergency(VOID)
{
    VOID *DrvId;

    /*--- start event session ---*/
    xxx_SessId = mio_StartEventSession("XXX1");

    if (xxx_SessId == -1)
    {
        log_Err("XXX_INITEM: Can't get session-ID!");
        return (-1);
    }

    /*--- determine Id of the I/O module ---*/
    DrvId = mio_GetDrv(1);

    if (DrvId == 0)
    {
        log_Err("XXX_INITEM: Can't get driver-ID!");
        return (-1);
    }

    /*--- attach to the interrupt ability of channel 2 ---*/
    if (mio_AttachEvent(DrvId, xxx_SessId, 2, MIO_EV_VALUE,
                        xxx_ProcEmergency, 0) == -1)
    {
        log_Err("XXX_INITEM: Can't attach event!");
        return (-1);
    }
 }
```

5.4 DOR206/230 (Digital Relay Output Module)

The DOR206/230 digital relay output module lends itself to controlling DC and AC voltages galvanically isolated from M1 systems.

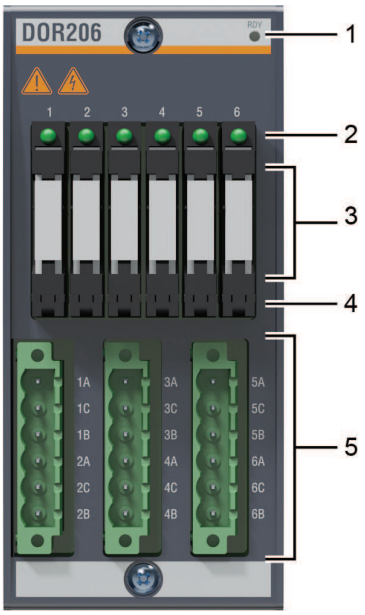

Fig. 105: DOR206/230 – Mechanical construction (overview)

1) Module ready LED
2) Status LEDs of digital relay outputs
3) Relay
4) Relay mounting bracket
5) Digital outputs relay

Mounting/dismounting of the relay see:
→ *Chapter 2.3 "DOR2xx – mounting/dismounting relay", Page 16-38*

5.4.1 Safety instructions

- When using electromechanical relays, increased electromagnetic disturbance radiation can occur due to the physical properties of dischargers.

  Use of semiconductor relays facilitates compliance with the limit values for transient emissions in accordance with IEC 61000-6-4.
- The use of a relay module as a safety relay or in safety-related applications (per SIL, as a separator, for safety locking, etc.) is impermissible.
- When connecting hazardous voltages (> 42.4 V peak value or 60 VDC) to the module, the backplane must satisfy the protection class I requirements!

  When equipping the digital relay output module subsequently, the backplane must be exchanged for a backplane that is consistent with the requirements of class 1 protection.

  → *Chapter 2.3.1 "Preparing the backplane", Page 8-9*

  When using a protection class I backplane the protective conductor must be configured for the maximum possible residual current.

  Observe national regulations and standards!

Protection against accidental contact

- The digital relay output module DOR206/230 provides basic protection against contact with live parts.

  To ensure adequate protection for operators, additional protection against accidental contact (e.g., switch cabinet) is required.
- For protection against accidental contact it is necessary to equip every slot with a relay.

  The use of caged terminals provides additional contact protection.
- The module housing is only grounded in the installed state.

Power supply

- Relay outputs that connect via a joint connector have to be supplied from the same external conductor.
- In that case, various external conductors (phases) in a 230/400 VAC 3-phase network can be connected only when the star point (neutral conductor) is grounded.

  The voltage can be a maximum 127/220 VAC in a 3-phase network with a grounded external conductor (phase).
- Do not connect 230 VAC and 24 VDC SELV/PELV jointly on one module.

5.4.2 Technical data

- Operating cycle counter for the relay.
- 6 relay output channels
- Standard socket for plugging in SIL relay with NOC, NCC or changeover contact
- Coiled current monitoring
- Status indication for the module and for each channel via LED
- Switching of voltages to 230 V
- Switching of currents to 4 A
- Galvanic isolation for the system rated for 2500 VAC

A maximum of eight relay output modules can be used on a backplane supplied by an NT25x.

If the backplane is supplied by an integrated power supply (BES2xx, FS2xx, ME203, MX2xx), a maximum of 3 relay outputs are possible.

Other combinations with other input / output modules are permitted. However, the maximum performance of the power supply module must be taken into account.

Digital Output Module		DOR206/230
Quantity		6
Header equipped with relay		Yes
Relay contact type		Electromechanical changeover contacts, gold-plated AgNi [1]
Output voltage		nom. +24 VDC, +48 VDC, 230 VAC
Output current per channel for various usage categories (limited by the relay)		nom. 0.5 A at +24 VDC, DC-13 [1] nom. 0.5 A at +24 VDC, ohmic load [1] nom. 1 A at 230 VAC, AC-15 [1] nom. 2 A at 230 VAC, ohmic load [1]
Current carrying capacity per channel		2 A [1]
Current carrying capacity per channel Overload case		4 A [1]
Voltage drop at maximum output current		Typ. 0.4 V [1]
Minimum switching load		50 mW [1]
Output protected (from overload current)		No, external protective equipment is to be provided
Outputs parallel connectable		no
Switching frequency with / without ohmic inductive load		≤ 1 / 0.1 Hz
Switching time (without contact bounce)	Response	typ. 5 ms [1)2)]
	Release	typ. 3 ms [1)2)]
[1] With factory equipped relay [2] Depending on load and wiring		

Tab. 189: DOR206/230 – Outputs

Circuit breakers of characteristic B, C, D, K and Z with a maximum nominal current of 4 A are suitable as external protective equipment.

Relay types other than those supplied by the factory (universally usable relays) con be used, e.g. electro-mechanical relays with NOC, semiconductor relays with 24 VDC / 48 VDC / 230 VAC output.

The following relay requirements are to be considered:

- Coil nominal voltage: 24 VDC
- Coil power consumption: maximum 170 mW
- Vibration resistance: Normally open contact / normally closed contact: 10 / 5 g
- Shock resistance: 30 g
- UL approved
- Contact protection: fully closed non-conductive can with potting
- Rated impulse withstand voltage: 6000 V (1.2/50 µs)

- Dielectric strength control/load circuit: 4000 VAC

Ambient conditions

Digital Output Module Relay equipment via EMR		DOR206/230
Temperature	Operation	-30 to +60 °C (standard install position)[1)2)] -30 to +55 °C (other install position) [2)]
	Storage	-40 to +85 °C[2)]
Rel. humidity	Operation	5 to 95 % without condensation
	Storage	5 to 95 % with condensation
Pollution degree		I (no or only dry, non-conductive contamination)
Altitude limits		2000 m above sea level (operation) > 2000 m above sea level → voltage and temperaturederating
[1)] Standard installation position see (→ *Chapter 2.1, Page 7-10*) [2)] With factory equipped relay		

Tab. 190: DOR206/230 – Ambient conditions

NOTICE

Condensation / icing

Impairment of the insulation

Malfunction of the relays

- ▶ Keep module dry.
- ▶ Avoid significant temperature changes.
- ▶ Reduce rel. humidity.

Power supply

Digital Output Module		DOR206/230
Power supply		Via BS2xx backplane SK1 + external
Current consumption via back-plane	+5 VDC	100 mA
	+15 VDC	63 mA[1)]
	-15 VDC	59 mA[1)]
Galvanic isolation for the system Overvoltage category / rating surge voltage		Reinforced insulation III / 4 kV (1.2/50 µs)[1)]
Galvanic isolation for housing / ground Overvoltage category / rating surge voltage		Base insulation III / 4 kV (1.2/50 µs)[1)]
Galvanic isolation between the channels of various output connectors Overvoltage category / rating surge voltage		Base insulation III / 4 kV (1.2/50 µs)[1)]
Galvanic isolation between the channels within an output connector Overvoltage category / rating surge voltage		Operational insulation II / 2.5 kV (1.2/50 µs)[1)]
Insulation between open relay contacts		Micro-cutoff 1 kV (1.2/50 µs)[1)]
[1)] With factory equipped relay		

Tab. 191: DOR206/230 – Power supply

Error messages

Error message	Meaning
Relay coil current too low	Relay coil high resistant or break Coil current < typ. 1 mA
Relay coil current too high	Relay coil low resistant or short Coil current > typ. 15 mA

Tab. 192: DOR206/230 – Error messages

5.4.3 Status indication

LED	Status	Description
RDY (yellow)	ON	M1 processor module can communicate with the module.
	OFF	M1 processor module could not establish communication with the module or a problem occurred when loading the driver. See logbook for further information.
	Flashes	Error M1 processor module can communicate with the module, but the module did detect an error, e.g. cable break or voltage failure. The fault can be evaluated by the application software.

Tab. 193: RDY status indication

5.4.4 Pin assignments

Relay outputs

	Pin	Signal	Pin	Signal	Pin	Signal	Description
	1	1 A	7	3 A	13	5 A	Relay connection top
	2	1C	8	3C	14	5C	Relay connection center
	3	1B	9	3B	15	5B	Relay connection bottom
	4	2 A	10	4 A	16	6 A	Relay connection top
	5	2C	11	4C	17	6C	Relay connection center
	6	2B	12	4B	18	6B	Relay connection bottom

Tab. 194: Pin assignment Digital outputs DOR206

The terminals for each relay output channel 1 to 6 are to be connected directly to the corresponding connections at relay headers 1 to 6.

5.4.4.1 Connector coding

Connecting plugs may be coded corresponding to DIN EN 61131-2 which can prevent the plugs from being mixed up.

→ *Chapter 4.5 "Coding connectors (optional)", Page 8-29*

5.4.5 Output circuit

DOR206/230

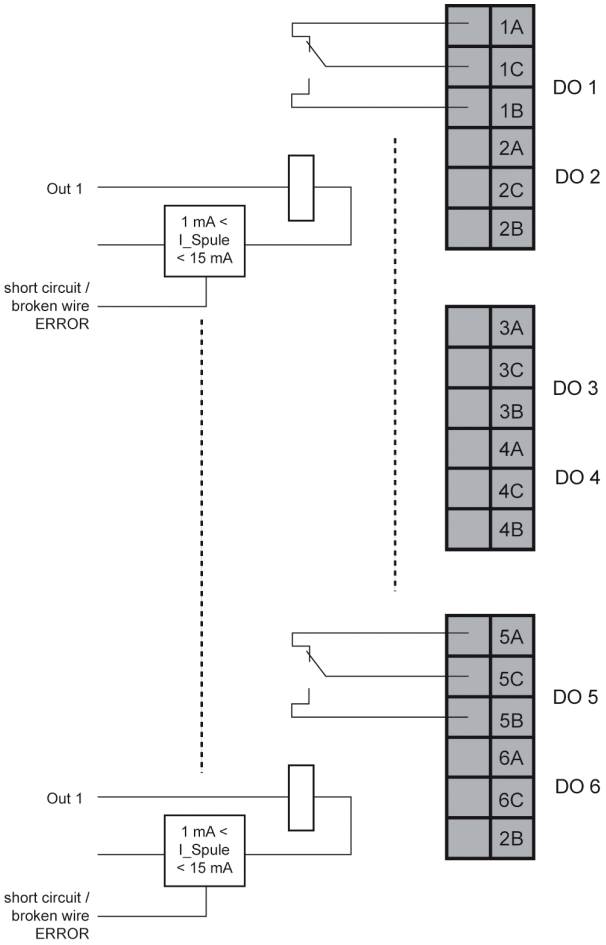

Fig. 106: Output circuits DOR206

5.4.6 Wiring examples

DOR206/230

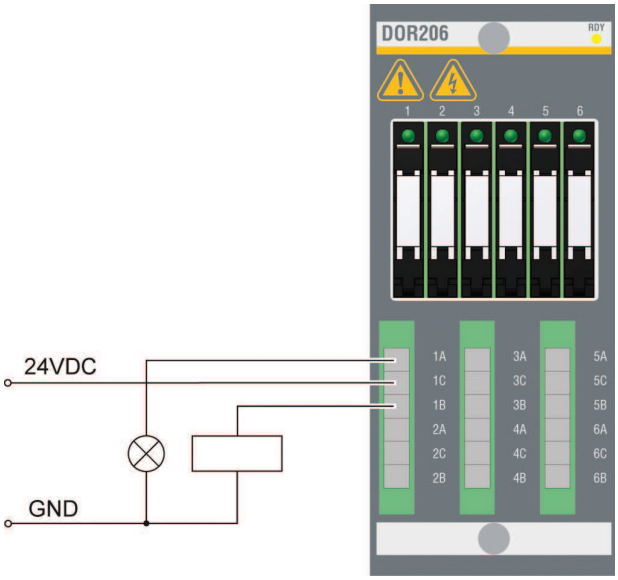

Fig. 107: Wiring Example DOR206/230 (24 VDC)

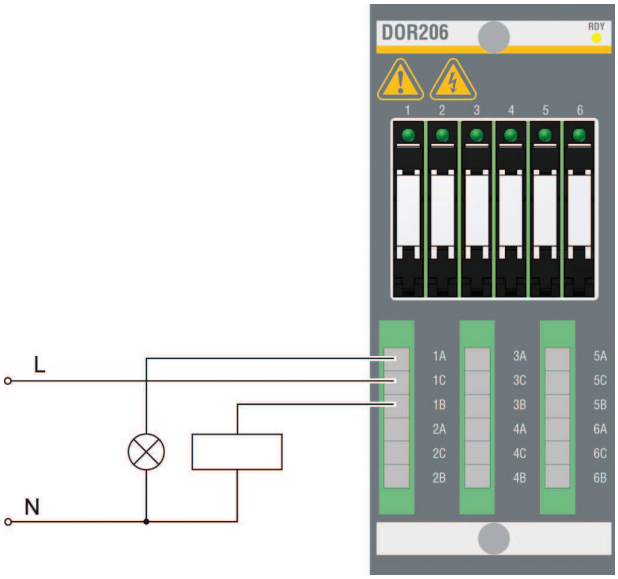

Fig. 108: Wiring Example DOR206/230 (230 VAC)

Wiring off various loads

Wiring	AC/DC	Feature	Selection of components
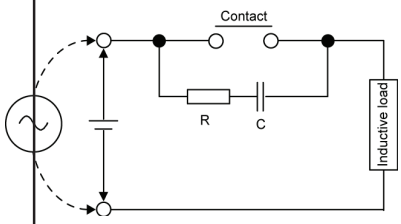	AC DC	• AC: The impedance of the load must be lower than that of the RC module. • The additional release delay is minor • Precise dimensioning required	Rough selection of R and C: R: 0.5 to 1 ohm per 1 V contact voltage C: 0.5 to 1 µF per 1 A contact current
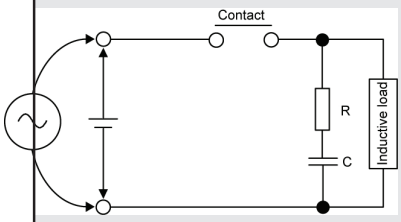	AC DC	• The additional release delay is minor • HF damping via energy storage • Precise dimensioning required	
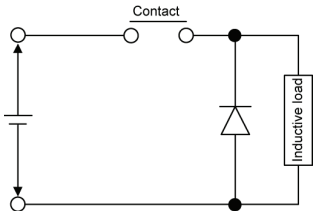	DC	• The additional release delay is very long • Dimensioning is uncritical, very simple and reliable • Induced voltage limit to 1 V	The diode breakdown voltage should, depending on the load, be at least 10 x higher than the operating voltage. Even a 2 x to 3 x breakdown voltage may be sufficient for low operating voltages.
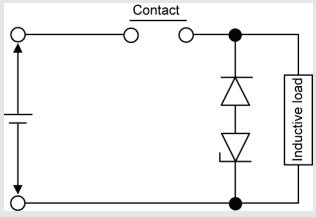	DC	• The additional release delay is medium • Dimensioning is uncritical, simple • Induced voltage limit to U_{ZD}	The breakdown voltage should be in the operating voltage range.
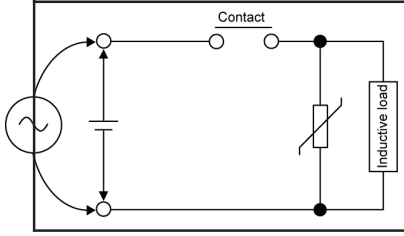	AC DC	• The additional release delay is minor • Induced voltage limit to U_{VDR}	

Tab. 195: Wiring options for prolonging the life of the contact

5.4.7 Configuration

Opening the configurator

Use Device Manager for the configuration.

→ *Chapter 10.4 "Configuring a hardware module", Page 13-269*

▶ Double-click the hardware module in navigator view.

➔ Configurator view opens.
The group "Basic configuration" is selected by default.

Configure the module

Requirements

Configurator view must have been opened.

Procedure:

1. Make changes.
   For detailed information on the parameters see the following description.
2. Save changes with  .

➔ The configuration is entered in the `mconfig.ini` file (→ *Chapter 5, Page 17-149*).

Parameter [1)]	Description / possible values	Default value
CardNumber	Defines the module number Is assigned automatically, however a separate user value can also be entered Allowed values: 1 to 32,000	Slot Number
SlotNb	Defines the slot number, is assigned automatically Allowed values: 1 to 16	Not configurable
StationNb	Defines the station number, is assigned automatically Allowed values: 1 to 16	Not configurable
Mode	Operating state of the module Allowable values • Real Real hardware module that is mounted on the M1 controller • Virtual Hardware module physically not present on the M1 controller Input channels can only be read, output channels can be read and written • VirtualRW Variant of the operating mode **Virtual** For simulation purposes, inputs are describable via function **mio_SetValue()**	`Real`
DriverName	Name of the module drive will be inserted automatically	DOR206
DeviceTag (optional)	Device tag of the hardware module Permitted number of characters: 63	– (disabled)
NoRedundantRead	• **ON** – No redundant reading of inputs. • **OFF** – Inputs are always read redundantly, regardless of the global setting. • **SYSTEM** – The global settings apply	SYSTEM (disabled)
ChanNameX	In this range, every channel can be enabled/disabled and the symbolic channel name can be modified. **x** serves as a placeholder for the channel numbers Permitted number of characters: 63	–

[1)] Name of parameter (SolutionCenter) and keyword (`mconfig.ini`) are identical

5.4.8 Application programming interface (API) – DOR206/230

Description of the programming interface see **API-Documentation**, section **MSys** > **Modules** > **I/O-Drivers**.

5.4.8.1 Application examples

Setting outputs

The status lamps of a machine are to be set. There are lamps for the states **OK**, **warning** and **error**. These lamps are set with the digital outputs 3, 4 and 5 of module 1.

```
#include <mio_e.h>

#define xxx_S_OK 1
#define xxx_S_WRN 2
#define xxx_S_ERR 3

SINT32 xxx_SetStateLamp(UINT32 StateLevel)
{
     VOID *DrvId;

     /*--- determine the Id of the I/O module ---*/

     DrvId = mio_GetDrv(1);

     if (DrvId == 0)
     {
         log_Err("XXX_TESTACK: Can't get driver-ID!");
         return (0);
     }

     /*--- switch off all lamps ---*/

     mio_SetValue(DrvId, 3, 0);
     mio_SetValue(DrvId, 4, 0);
     mio_SetValue(DrvId, 5, 0);

     /*--- switch on new lamp ---*/

     switch (StateLevel)

     {
        case XXX_S_OK:
            mio_SetValue(DrvId, 3, 1);
            break;
        case XXX_S_WRN:
            mio_SetValue(DrvId, 4, 1);
            break;
        case XXX_S_ERR:
            mio_SetValue(DrvId, 5, 1);
            break;
     }
}
```

Using a channel's error detectionability

Connected to the digital output 5 of module 4 is a switch, which is very important for the process. Therefore, an immediate response to an error is required.

```
#include <mio_e.h>

MLOCAL UINT32 xxx_SessId = -1;   /* session for attaching to
                                    interrupt */

VOID xxx_ProcError(VOID *DrvId, UINT32 Chan,
                   UINT32 Event, UINT32 Para)
{
     /*--- error handling ---*/
                 :
                 :
}

SINT32 xxx_InitError(VOID)
{
     VOID *DrvId;

     /*--- start error session ---*/

     xxx_SessId = mio_StartErrorSession("XXX1");
     if (xxx_SessId == -1)
     {
        log_Err("XXX_INITERR: Can't get session-ID!");
        return (-1);
     }

     /*--- determine Id of I/O module 4 ---*/

     DrvId = mio_GetDrv(4);

     if (DrvId == 0)
     {
        log_Err("XXX_INITERR: Can't get driver-ID!");
        return (-1);
     }

     /*--- attach to the error ability of channel 5 ---*/

     if (mio_AttachError(DrvId, xxx_SessId, 5,
                         MIO_E_BROKENWIRE |
                         MIO_E_SHORTCIRC,
                         xxx_ProcError, 0) == -1)
     {
        log_Err("XXX_INITERR: Can't attach error!");
        return (-1);
     }
}
```

6.5 AIO208/216 (Input/Output Modules)

The combined input/output module AIO208/216 is suitable for controlling analog actuators and for entering signals from analog sensors, feelers or switches.

The input/output modules AIO208 and AIO216 differ only in the number of available channels.

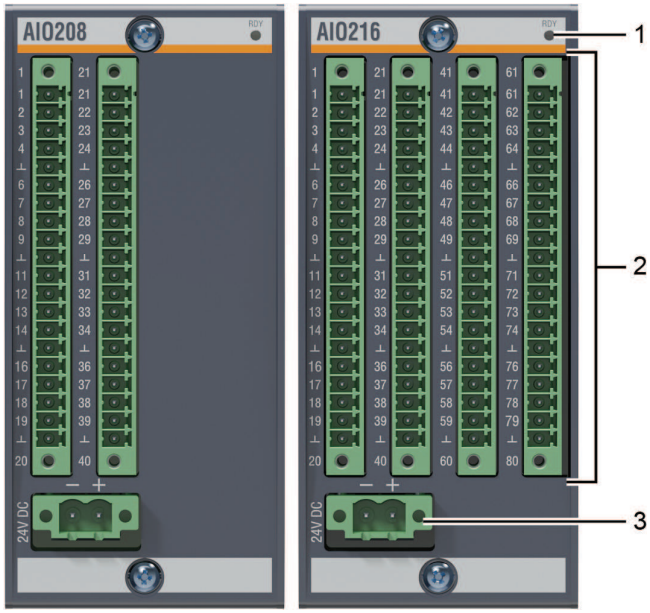

Fig. 142: Modules AIO208 and AIO216 – Mechanical construction (overview)

1) Module ready LED
2) Inputs/Outputs
3) POWER interface (power supply)

Modules for the extended temperature range (ColdClimate) have a ❄- symbol on the front.

6.5.1 Technical data (AIO208/216)

- A maximum of 32 configurable input / output channels for analog signals, isolated against the system.
- Supply voltage for sensors
- Current sources for Pt sensors
- Single ended or differential connection of the sensors
- Different methods for error detection, depending on the set configuration (e.g. cable break on the inputs, overload of the outputs, overtemperature)
- Failure detection of the supply voltage
- External 24 VDC power supply



While considering the maximum performance of the power supply module on a controller, just as many input / output modules can be used as the number of slots available.

Other combinations with other input / output modules are permitted.

Voltage input (VoltageIn)

Channels		Maximum of 8 (AIO208) / maximum of 16 (AIO216)			
Measuring ranges		-10 to +10 V	-1 to +1 V	-100 to +100 mV	-10 to +10 mV
Input type		Differential			
Input impedance		> 100 kΩ			
Digital filter	Adjustment range	0.5 Hz to 4 kHz			
Resolution		16 Bit			
Maximum error[1)]	T_A 25 °C	Range ±10 V: ±0.05 % FS Range ±1 V: ±0.05 % FS Range ±100 mV: ±0.05 % FS Range ±10 mV: ±0.2 % FS			
	T_A -30 to 60 °C	Range ±10 V: ±0.15 % FS Range ±1 V: ±0.15 % FS Range ±100 mV: ±0.15 % FS Range ±10 mV: ±0.4 % FS			
Allowed common mode voltage		±1 V		-1 to +4 V	±3 V
Common mode rejection voltage		> 60 dB			
Cross-talk attenuation between the channels		> 60 dB			
Line length		< 30 m			
External proof voltage		±24 V			
Maximum short-term deviation for each specified short-term fault check (burst, surge etc.)		±1 % of the input range			
Error detection	Line breakage	Yes			
Measuring range monitoring		Yes (fixed – corresponds to nominal range)			
Measured value monitoring		Yes (adjustable – lower and upper limit)			

Interrupts	Errors	• Exceedance of measuring range upper limit • Exceedance of measuring range lower limit • Exceedance of measured value upper limit • Exceedance of measured value lower limit • Line breakage
	Events	• Exceedance of measured value upper limit • Exceedance of measured value lower limit
I/O-Bus Sync		Input values can be transferred with the Sync-Signal
Default settings		• Measuring range: ±10 V • Filter: 1 kHz at ±10 V and ±1 V; 31.2 Hz at ±100 mV and ±10 mV • Limits as error disabled • Sync inactive • Interrupts inactive • Error messages enabled
[1] Valid for DC. [2] Shielded cables are generally recommended for all analog signals. The shield connection should be carried out using shield clamps.		

Tab. 250: AIO208/216 – Voltage input (VoltageIn)

Voltage output (VoltageOut)

Channels		Maximum of 8 (AIO208) / maximum of 16 (AIO216)	
output range		±10 V	0 to +10 V (sensor supply)
Output voltage		-10 to +10 V	0 to +10 V
Load impedance / Output current		Minimum 1 kΩ	Maximum 20 mA
Resolution		14 Bit	
Maximum error[1)]	T_A 25 °C	Range ±10 V: ±0.05 % FS Range 0 to 10 V: ±0.1 % FS	
	T_A -30 to 60 °C	Range ±10 V: ±0.1 % FS Range 0 to 10 V: ±0.2 % FS	
Allowed common mode voltage		±1 V	
Common mode rejection voltage		> 60 dB	
Cross-talk attenuation between the channels		> 60 dB	
Line length		< 30 m	
External proof voltage		±24 V	
Short circuit capability		Yes	
Error detection	Short-circuit	Yes	
Interrupts	Errors	Short-circuit	
I/O-Bus Sync		Register values can be transferred on the outputs with the Sync-Signal	
Default settings		• Output range: ±10 V • Sync inactive • Interrupts inactive • Error messages enabled	

[1)] Valid for DC without load.

[2)] Shielded cables are generally recommended for all analog signals. The shield connection should be carried out using shield clamps.

Tab. 251: AIO208/216 – Voltage output (VoltageOut)

Current input (CurrentIn)

Channels		Maximum of 8 (AIO208) / maximum of 16 (AIO216)		
Measuring ranges		±20 mA	4 to +20 mA	0 to +20 mA
Input impedance		Type 230 Ω Maximum 300 Ω	Type 250 Ω Maximum 300 Ω	Type 230 Ω Maximum 300 Ω
Digital filter	Adjustment range	0.5 Hz to 1 kHz		
Resolution		16 Bit		
Maximum error[1)]	T_A 25 °C	Range ±20 mA: ±0.1 % FS Range 4 to 20 mA: ±0.2 % FS Range 0 to 20 mA: ±0.2 % FS		
	T_A -30 to 60 °C	Range ±20 mA: ±0.2 % FS Range 4 to 20 mA: ±0.4 % FS Range 0 to 20 mA: ±0.4 % FS		
Line length		< 30 m with unshielded cable < 100 m with shielded cable		
Allowed common mode voltage		±6 V		
Common mode rejection voltage		> 60 dB		
Cross-talk attenuation between the channels		> 60 dB		
External proof voltage		±24 V		
Error detection	Line breakage	No	Yes	No
Measuring range monitoring		Yes (fixed, corresponds to nominal range)		
Measured value monitoring		Yes (adjustable, lower and upper limit)		

Interrupts	Errors	• Exceedance of measuring range upper limit • Exceedance of measuring range lower limit • Exceedance of measured value upper limit • Exceedance of measured value lower limit • Line breakage (only at 4 to 20 mA)
	Events	• Exceedance of measured value upper limit • Exceedance of measured value lower limit
I/O-Bus Sync		Input values can be transferred with the Sync-Signal
Default settings		• Measuring range: 4 to 20 mA • Filter: 1 kHz • Limits as error disabled • Sync inactive • Interrupts inactive • Error messages enabled
[1] Valid for DC.		

Tab. 252: AIO208/216 – Current input (CurrentIn)

Current output (CurrentOut)

Channels		Maximum of 8 (AIO208) / maximum of 16 (AIO216)
Nominal range		0 to 20 mA 4 to 20 mA 0 to 2 mA 0 to 200 µA
Output type		Differential
Burden		Maximum 600 Ω
Resolution		14 Bit
Maximum error[1)]	T_A 25 °C	Range 0 to 20 mA: ±0.2 % FS Range 4 to 20 mA: ±0.2 % FS Range 0 to 2 mA: ±0.2 % FS Range 0 to 200 µA: ±0.5 % FS
	T_A -30 to 60 °C	Range 0 to 20 mA: ±0.3 % FS Range 4 to 20 mA: ±0.3 % FS Range 0 to 2 mA: ±0.3 % FS Range 0 to 200 µA: ±0.8 % FS
Line length		< 30 m with unshielded cable < 100 m with shielded cable
Cross-talk attenuation between the channels		> 60 dB
External proof voltage		±24 V
Error detection	Line breakage	Yes
Interrupts	Errors	Line breakage
I/O-Bus Sync		Register values can be transferred on the outputs with the Sync-Signal
Default settings		• Nominal range: 4 to 20 mA • Sync inactive • Error messages enabled
[1)] Valid for DC.		

Tab. 253: AIO208/216 – Current output (CurrentOut)

Thermocouple (ThermoCouple)

Channels		Maximum of 8 (AIO208) / maximum of 16 (AIO216)						
Sensor		Type J	Type K	Type T	Type N	Type E	Type R	Type S	Type B
Measuring range		-30 to 1200 °C	-30 to 1370 °C	-30 to 400 °C	-30 to 1300 °C	-30 to 1000 °C	-30 to 1768 °C	-30 to 1768 °C	600 to 1820 °C
Sensor earthed/not earthed		Configurable On modules with a ER < 110 a jumper must be fitted between the signals UI_x and UN_x or UI_x and GND (signal assignment see (→ *Chapter 6.5.3, Page 4-388*)) on modules when using non-grounded thermocouples. This jumper is no longer required for modules with ER ≥ 110, but it can be retained.						
Filter (adjustment range)		0.5 Hz to 1 kHz						
Cold spot compensation		Internal cold spot sensor or External sensor (adjustment of the cold spot with the aid of **do_cmd MIO_CMD_GIOSETCOLDJUNCTEMP**) The cold spot temperature is entered in pairs, i. e. even with an external sensor, only one cold spot temperature can be considered per Asic. The cold spot is also measured for channel pairs.						
Resolution		16 Bit						
Maximum error[1)]	T_A 25 °C	Type J: ±0.15 % FS Type K: ±0.15 % FS Type T: ±0.3 % FS Type N: ±0.15 % FS Type E: ±0.15 % FS Type R: ±0.25 % FS Type S: ±0.25 % FS Type B: ±0.25 % FS						
	T_A -30 to 60 °C	Type J: ±0.3 % FS Type K: ±0.3 % FS Type T: ±0.6 % FS Type N: ±0.3 % FS Type E: ±0.3 % FS Type R: ±0.4 % FS Type S: ±0.4 % FS Type B: ±0.4 % FS						
Values		Absolute temperature, resolution 0.1 Kelvin per digit						
Line length		< 30 m						

Allowed common mode voltage		±3 V (e.g. caused by ground fault)
Common mode rejection voltage		> 60 dB
External proof voltage		±24 V
Maximum short-term deviation for each specified short-term fault check (burst, surge etc.)		±1 % of the input range
Error detection[2)]	Line breakage	Yes
Measuring range monitoring		Yes (fixed, corresponds to nominal range)
Measured value monitoring		Yes (adjustable, lower and upper limit)
Interrupts	Errors	• Exceedance of measuring range upper limit • Exceedance of measuring range lower limit • Exceedance of measured value upper limit • Exceedance of measured value lower limit • Line breakage
	Events	• Exceedance of measured value upper limit • Exceedance of measured value lower limit
I/O-Bus Sync		Input values can be transferred with the Sync-Signal
Default settings		• Sensor: Type J • Unearthed sensor • Filter: 31.2 Hz • Limits as error disabled • Sync inactive • Interrupts inactive • Error messages enabled

[1)] Without considering the cold spot error and thermocouple itself, valid for DC at 31.2 Hz filter.

[2)] Error detection of arm short-circuit and external voltage via exceedance of measuring range must be implemented in the application.

Tab. 254: AIO208/216 – Thermocouple (ThermoCouple)

Temperature sensor (TempSensor)

Channels		Maximum of 8 (AIO208) / maximum of 16 (AIO216)	
Measuring ranges		-100 to 800 °C	
Sensor type		Pt100	Pt1000
Input type		• 2-wire measurement • 3-wire measurement (with 2 constant current sources) • 4-wire measurement	
Digital filter	Adjustment range	0.5 Hz to 1 kHz	
Sensor current		1.7 mA	170 µA
Resolution		16 Bit	
Maximum error[1)]	T_A 25 °C	PT100: ±0,15 % from 900° (measuring range -100 to 800 °C) PT1000: ±0,15 % from 900° (measuring range -100 to 800 °C)	
	T_A 0 to 60 °C	PT100: ±0,3 % from 900° (measuring range -100 to 800 °C) PT1000: ±0,3 % from 900° (measuring range -100 to 800 °C)	
	T_A -30 to 0 °C	PT100: ±0,4 % from 900° (measuring range -100 to 800 °C) PT1000: ±0,4 % from 900° (measuring range -100 to 800 °C)	
Values		Absolute temperature, resolution 0.1 Kelvin per digit	
Line length		< 30 m	
External proof voltage		±24 V	
Maximum short-term deviation for each specified short-term fault check (burst, surge etc.)		±1 % of the input range	
Error detection	Line breakage	Yes	
Measuring range monitoring		Yes (fixed – corresponds to nominal range)	
Measured value monitoring		Yes (adjustable – lower and upper limit)	
Interrupts	Errors	• Exceedance of measuring range upper limit • Exceedance of measuring range lower limit • Exceedance of measured value upper limit • Exceedance of measured value lower limit • Line breakage	

	Events	• Exceedance of measured value upper limit • Exceedance of measured value lower limit
I/O-Bus Sync		Input values can be transferred with the Sync-Signal
Default settings		• PT100, 2-wire measurement • Filter: 31.2 Hz • Limits as error disabled • Sync inactive • Interrupts inactive • Error messages enabled
[1)] Valid for DC at 31.2 Hz filter and 4-conductor measurement.		

Tab. 255: AIO208/216 – Temperature sensor (TempSensor)

Ambient conditions

		AIO208/216	AIO208/216 ❄
Temperature	Operation	-30 to +60 °C (standard install position) [1] -30 to +55 °C (other install position)	
	Storage	-40 to +85 °C	
Relative humidity	Operation	5 to 95 % without condensation	5 to 95 % with condensation
	Storage	5 to 95 % with condensation	
[1)] Standard installation position see (→ *Chapter 2.1, Page 7-10*) ❄ ColdClimate design			

Tab. 256: AIO208/216 – Ambient conditions

Power supply

		AIO208/216	AIO208/216 ❄
Power supply		Via BS2xx backplane + external	
Current consumption via backplane	+5 VDC	80 mA	
Galvanic isolation for the system		Yes, up to 500 V	
❄ ColdClimate design			

Tab. 257: AIO208/216 – Power supply

External power supply

External voltage	Description
Input voltage, nominal	+24 VDC
Input voltage, range	+18 to +34 VDC
Input voltage, Maximum value, t < 1 s / min	+40 VDC
Current consumption	Typically 200 mA at +24 V
Reverse polarity protection	Yes

Tab. 258: AIO208/216 – External power supply

6.5.2 Status indications

LED	Status	Description
RDY (yellow)	ON	M1 processor module can communicate with the module.
	OFF	M1 processor module could not establish communication with the module or a problem occurred when loading the driver. See logbook for further information.
	Flashes	Error M1 processor module can communicate with the module, but the module did detect an error, e.g. cable break or voltage failure. The fault can be evaluated by the application software.

Tab. 259: RDY status indication

6.5.3 Jack allocation

Input/Output signals

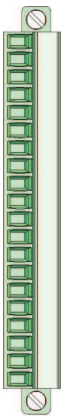

Connector 1/2/3/4 Pin				Signal	Description	Channel			
1	21	41	61	IA_x	Current output+	1	2	9	10
2	22	42	62	UP_x	Voltage input+ / Current input+ / Voltage output+				
3	23	43	63	UI_x	Voltage input- / Current input-				
4	24	44	64	UN_x	Voltage output- / Current output-				
5	25	45	65	GND	Reference potential				
6	26	46	66	IA_x	Current output+	3	4	11	12
7	27	47	67	UP_x	Voltage input+ / Current input+ / Voltage output+				
8	28	48	68	UI_x	Voltage input- / Current input-				
9	29	49	69	UN_x	Voltage output- / Current output-				
10	30	50	70	GND	Reference potential				
11	31	51	71	IA_x	Current output+	5	6	13	14
12	32	52	72	UP_x	Voltage input+ / Current input+ / Voltage output+				
13	33	53	73	UI_x	Voltage input- / Current input-				
14	34	54	74	UN_x	Voltage output- / Current output-				
15	35	55	75	GND	Reference potential				
16	36	56	76	IA_x	Current output+	7	8	15	16
17	37	57	77	UP_x	Voltage input+ / Current input+ / Voltage output+				
18	38	58	78	UI_x	Voltage input- / Current input-				
19	39	59	79	UN_x	Voltage output- / Current output-				
20	40	60	80	GND	Reference potential				

Tab. 260: Pin assignment Inputs/Outputs AIO208/216

Power supply

	Pin	Signal	Description
	1	+	+24 VDC
	2	-	Ground

Tab. 261: Pin assignment supply voltage

All pins marked "24V" are internally connected to one another and to the "+" pin of the two-pin power supply connector.
The maximum current of 12 A per pin must not be exceeded.

6.5.4 Wiring examples

A wiring diagram is generated automatically in the configurator of the assembly depending on the settings and can be archived via a PDF export if necessary.

→ *Chapter 6.11.6.2.1 "Display of the jack allocation", Page 4-602*
→ *Chapter 6.11.6.5 "Exporting the PDF", Page 4-607*

6.5.5 Operating modes and functions

The modules AIO208 and AIO216 firm Bachmann electronic GmbH have very many flexible inputs and outputs.

Analog interfaces are available for connecting sensors and actuators.

6.5.5.1 Channel mode

The table shows an overview of the possible channel modes:

Channel mode	Application example	Note
Disabled	Unused channel	Channel is inactive
VoltageIn	Sensors with voltage output	–
VoltageOut	Actuators with voltage input	–
CurrentIn	Sensors with current output	–
CurrentOut	Actuators with current input	–
ThermoCouple	Temperature measurement with different thermocouples	–
TempSensor	Temperature measurement with different PT elements	–

Tab. 262: Overview of channel modes (module AIO208/216)



It is possible to see how the actuators and sensors must be connected by selecting the corresponding channel mode in the display of the jack allocation (→ *Chapter 6.5.6.2.1, Page 4-416*).

6.5.5.2 Channels

6.5.5.2.1 Primary and secondary channels

The module AIO208 has 8, the module AIO216 16 connection channels.

Depending on the function selected, a 2. function can be implemented on the same channel.

In this description, this 2. function is called the **secondary channel**, while the main function is called the **primary channel**.

The channel numbers of the secondary channels have an offset of 16 and therefore begin at channel 17.

Module	Primary channel	Associated secondary channel
AIO208/AIO216	1	17
	2	18
	3	19
	4	20
	5	21
	6	22
	7	23
	8	24
AIO216	9	25
	10	26
	11	27
	12	28
	13	29
	14	30
	15	31
	16	32

Tab. 263: AIO208/216 – Assignment of primary/secondary channel

6.5.5.2.1.1 Specific requirements of secondary channels

Secondary channels are only possible if the primary channel is configured on the corresponding channel. Secondary channels are restricted in their application. Not all functions of the primary channels are available.

The following channel modes are not available for secondary channels:

- ThermoCouple
- TempSensor

Other special features:

- No synchronization possible using the Sync signal

Secondary channels have the same evaluations as primary channels in terms of errors and events.

Measuring ranges, filters and limits

The same settings as with the corresponding primary channels are possible, even the default values are identical.

6.5.5.2.1.2 Dependencies between primary and secondary channels

The possible settings for a secondary channel always depend on the corresponding primary channel. If the primary channel is switched off, the secondary channel cannot be used either.

Primary channel: Set function	Secondary channel: Available functions
Disabled TempSensor	Disabled
CurrentOut	Disabled VoltageIn VoltageOut CurrentIn
VoltageIn VoltageOut CurrentIn ThermoCouple	Disabled CurrentOut

Tab. 264: AIO208/216 – Dependencies between primary and secondary channels

The dependencies between primary and secondary channels are taken into account automatically in the SolutionCenter during the configuration. Only the functions suitable for the primary channel are available for the secondary channel.

6.5.5.3 Channel mode Disabled

Channel is inactive.

Parameter

–

Secondary channel

Not possible. A secondary channel can only be configured if the associated primary channel is not inactive.

6.5.5.4 Channel mode VoltageIn

Channel mode for primary channel: Analog voltage measurement

Parameter

Parameter	Values		Description
"Measuring range"	-+10V (Standard) -+1V -+100mV -+10mV		Setting of the measuring range for voltage measurement
"Enable interpolation"	Active Inactive (default)		If this function is enabled, read values are interpolated between 2 actual sample times. The interpolation results in a higher latency time.
"Filter"	4kHz 2kHz 1kHz (default at ±10 V and ±1 V) 500Hz 250Hz 125Hz 62.5Hz 31.2Hz (default at ±100 mV and ±10 mV) 15.6Hz 7.8Hz 3.9Hz 1.9Hz 0.97Hz		Setting of the limit frequency for voltage measuring Dependency of latency time and sample rate on setting of the cut-off frequency and optional switchable interpolation (ITP) for voltage measurement see (→ *Table, Page 4-556*)
"Upper limit [V] /" "Lower limit [V]"	Measuring range: ±10 V:	Allowable values: -10.5 to 10.5 Standard: 10.500000	When using the upper/lower limit, activation takes place via the associated check box.
	Measuring range: ±1 V:	Allowable values: -1.05 to 1.05 Standard: 1.050000	
	Measuring range ±100 mV:	Allowable values: -105 to 105 Default: 105.000000	
	Measuring range ±10 mV:	Allowable values: -10.5 to 10.5 Default: 10,500	
"Limit as Error"	Enabled		Exceeding the set limits is signaled as error (error status / error interrupt).

Parameter	Values	Description
	Disabled (default)	Exceeding the set limits is signaled as event (event status / event interrupt).
"Sync IO"	Check box Default value: inactive	Active: Register value is updated with an edge from the Sync signal Inactive: Register value is updated cyclically according to the update cycle (see Base configuration).
"Disable Errors"	Check box Default value: inactive	If this function is enabled, error messages of the channel are suppressed.
"Scale type"	→ *Chapter 10.4.1 "Configuring I/O channel scaling", Page 13-271*	

Tab. 265: AIO208/216 – Parameters of the channel mode VoltageIn

Voltage measurement

fg [Hz], approx.		4000	2000	1000	500	250	125
Without ITP	td [ms]	0.241	0.482	0.964	1.928	3.856	7.712
	Sample rate [S/s]	15,625	7,813	3,906	1,953	977	488
With ITP	td [ms]	0.417	0.834	1.668	3.336	6.672	13.344
	Sample rate [S/s]	16,000,000	8,000,000	4,000,000	2,000,000	1,000,000	500,000

fg [Hz], approx.		62.5	31.2	15.6	7.8	3.9	1.9	0.97
Without ITP	td [ms]	15.42	30.85	61.70	123.4	246.8	493.6	987.1
	Sample rate [S/s]	244	122	61	30.5	15.3	7.63	3.81
With ITP	td [ms]	26.688	53.376	106.752	213.504	427.008	854.016	1,708.032
	Sample rate [S/s]	250,000	125,000	62,500	31,250	15,625	7,813	3,906

Tab. 266: AIO208/216 – Dependency of latency time and sample rate on setting of the cut-off frequency and optional switchable interpolation (ITP) for voltage measurement

Secondary channel

Possible settings with VoltageIn mode:

- "Disabled" (default)
- "CurrentOut"

ERROR

Error messages with VoltageIn mode:

- Threshold values for upper or lower limit of the measuring range exceeded
- Cable break

Limit values:

- Measuring range ±10 V, limit ±10.5 V
- Measuring range ±1 V, limit ±1.05 V
- Measuring range ±100 mV, limit ±105 mV
- Measuring range ±10 mV, limit ±10.5 mV
- Threshold values for upper or lower limit exceeded

Events

Event messages with VoltageIn mode:

- Threshold values for upper or lower limit exceeded

6.5.5.5 Channel mode VoltageOut

Channel mode fur primary channel: Analog voltage output

Parameter

Parameter	Values	Description
"Range"	-+10V (Standard)	Voltage output according to EN 61131-2 for minimum load of 1 kΩ
	0-10V SensorSupply	Unipolar voltage output 0 to 10 V with higher output current of 20 mA maximum to feed sensors.
"Sync IO"	Check box Default: disabled	Active: Output is updated with an edge from the Sync signal Inactive: Output is updated cyclically according to the update cycle (see Base configuration)
"Disable Errors"	Check box Default: disabled	If this function is enabled, error messages of the channel are suppressed.
"Scale type"	→ *Chapter 10.4.1 "Configuring I/O channel scaling", Page 13-271*	

Tab. 267: AIO208/216 – Parameters for channel mode VoltageOut

Secondary channel

Possible settings with VoltageOut mode:

- "Disabled" (default)
- "CurrentOut"

ERROR

Error messages with VoltageOut mode:

- Overcurrent

6.5.5.6 Channel mode CurrentIn

Channel mode for primary channel: Analog current measuring

Parameter

Parameter	Values	Description
"Measuring range"	-+20mA 4-20mA (default) 0-20mA	Setting of the measuring range for voltage measurement
"Enable interpolation"	Active Inactive (default)	If this function is enabled, read values are interpolated between 2 actual sample times. The interpolation results in a higher latency time.
"Filter"	1kHz (default) 500Hz 250Hz 125Hz 62.5Hz 31.2Hz 15.6Hz 7.8Hz 3.9Hz 1.9Hz 0.97Hz	Setting of the limit frequency for current measuring → *Table 368 "GIO212 – Dependency of latency time and sample rate on setting of the cut-off frequency and optional switchable interpolation (ITP) for current measurement", Page 4-561*
"Upper limit [µA]"	Measuring range ±20mA: -21000 … 21000, default: 21000 Measuring range 4 to 20mA: -13000 … 21000, default: 21000	When using the upper limit, activation takes place via the associated check box.
"Lower limit [µA]"	Measuring range ±20mA: -21000 … 21000, default: -21000 Measuring range 4 to 20mA: -13000 … 21000, default: -13000	When using the lower limit, activation takes place via the associated check box.
"Limit as Error"	Enabled	Exceeding the set limits is signaled as error (error status / error interrupt).
	Disabled (default)	Exceeding the set limits is signaled as event (event status / event interrupt).
"Sync IO"	Active Inactive (default)	Active: Register value is updated with an edge from the Sync signal Inactive: Register value is updated cyclically according to the update cycle (see Base configuration).
"Disable Errors"	Active Inactive (default)	If this function is enabled, error messages of the channel are suppressed.
"Scale type"	→ *Chapter 10.4.1 "Configuring I/O channel scaling", Page 13-271*	

Tab. 268: AIO208/216 – Parameters for channel mode CurrentIn

Current measurement

fg [Hz], approx.		1000	500	250	125	62.5
Without ITP	td [ms]	0.961	1.922	3.844	7.688	15.38
	Sample rate [S/s]	3,906	1,953	977	488	244
With ITP	td [ms]	1.921	3.384	7.68	15.37	30.74
	Sample rate [S/s]	4,000,000	2,000,000	1,000,000	500,000	250,000

fg [Hz], approx.		31.2	15.6	7.8	3.9	1.9	0.97
Without ITP	td [ms]	30.75	61.50	123.0	246.0	493.0	984.1
	Sample rate [S/s]	122	61	30.5	15.3	7.63	3.81
With ITP	td [ms]	61.47	122.9	245.9	491.8	983.6	1967
	Sample rate [S/s]	125,000	62,500	31,250	15,625	7,813	3,906

Tab. 269: AIO208/216 – Dependency of latency time and sample rate on setting of the cut-off frequency and optional switchable interpolation (ITP) for current measurement

Secondary channel

Possible settings with CurrentIn mode:

- Disabled (default)
- CurrentOut

ERROR

Error messages with CurrentIn mode:

- Threshold values for upper or lower limit of the measuring range exceeded
- Threshold values for upper or lower limit exceeded
- Cable break (only for measuring range 4 to 20 mA)

Events

Event messages with CurrentIn mode:

- Threshold values for upper or lower limit exceeded

6.5.5.7 Channel mode CurrentOut

Channel mode for primary channel: Analog current output

Parameter

Parameter	Values	Description
"Range"	0-20mA 4-20mA (default) 0-2mA 0-200µA	Setting of the signal range for the current output
"Sync IO"	Check box Default: disabled	Active: Output is updated with an edge from the Sync signal Inactive: Output is updated cyclically according to the update cycle (see Base configuration)
"Disable Errors"	Check box Default: disabled	If this function is enabled, error messages of the channel are suppressed.
"Scale type"	→ *Chapter 10.4.1 "Configuring I/O channel scaling", Page 13-271*	

Tab. 270: AIO208/216 – Parameters for channel mode CurrentOut

Secondary channel

Possible settings with CurrentOut mode:

- "Disabled" (default)
- "VoltageIn"
- "VoltageOut"
- "CurrentIn"

ERROR

Error messages with CurrentOut mode:

- Cable break/ohmic output load too great

6.5.5.8 Channel mode ThermoCouple

Channel mode for primary channel: Temperature measuring with thermocouples

Parameter

Parameter	Values	Description
"Element mode"	J (Measuring range: -100°C ... 1200°C), default K (measuring range: -100°C … 1370°C) T (measuring range: -100°C … 400°C) N (measuring range: -100°C … 1300°C) E (measuring range: -100°C … 1000°C) R (measuring range: -50°C … 1768°C) S (measuring range: -50°C … 1768°C) B (measuring range: 600°C … 1820°C)	Type of thermocouple used
"Filter"	1kHz 500Hz 250Hz 125Hz 62.5Hz 31.2Hz (default) 15.6Hz 7.8Hz 3.9Hz 1.9Hz 0.97Hz	Setting of the limit frequency for temperature measuring → *Table 377 "GIO212 – Dependency of latency time and sample rate on setting of the cut-off frequency and optional switchable interpolation (ITP) for temperature measurement", Page 4-590*
"Grounded junction probe"	Active Inactive (default)	Enable for thermocouples with earthed measuring point or sensors with which the internal thermocouple measuring point is connected to the sensor housing electrically.
"Enable interpolation"	Active Inactive (default)	If this function is enabled, read values are interpolated between 2 actual sample times. The interpolation results in a higher latency time.
"Upper limit [K]"	Value range corresponds to the measuring range of the relevant thermocouple (unit K). Default: disabled	When using the upper limit, activation takes place via the associated check box.
"Lower limit [K]"	Value range corresponds to the measuring range of the relevant thermocouple (unit K). Default: disabled	When using the lower limit, activation takes place via the associated check box.
"Limit as Error"	Enabled	Exceeding the set limits is signaled as error (error status / error interrupt).

Parameter	Values	Description
	Disabled (default)	Exceeding the set limits is signaled as event (event status / event interrupt).
"Sync IO"	Active Inactive (default)	Active: Register value is updated with an edge from the Sync signal Inactive: Register value is updated cyclically according to the update cycle (see Base configuration).
"Disable Errors"	Active Inactive (default)	If this function is enabled, error messages of the channel are suppressed.
"Scale type"	→ *Chapter 10.4.1 "Configuring I/O channel scaling", Page 13-271*	

Tab. 271: AIO208/216 – Parameters for channel mode ThermoCouple

Temperature measurement

fg [Hz], approx.		1000	500	250	125	62.5
Without ITP	td [ms]	0.961	1.922	3.844	7.688	15.38
	Sample rate [S/s]	3,906	1,953	977	488	244
With ITP	td [ms]	1.921	3.384	7.68	15.37	30.74
	Sample rate [S/s]	4,000,000	2,000,000	1,000,000	500,000	250,000

fg [Hz], approx.		31.2	15.6	7.8	3.9	1.9	0.97
Without ITP	td [ms]	30.75	61.50	123.0	246.0	493.0	984.1
	Sample rate [S/s]	122	61	30.5	15.3	7.63	3.81
With ITP	td [ms]	61.47	122.9	245.9	491.8	983.6	1967
	Sample rate [S/s]	125,000	62,500	31,250	15,625	7,813	3,906

Tab. 272: AIO208/216 – Dependency of latency time and sample rate on setting of the cut-off frequency and optional switchable interpolation (ITP) for temperature measurement

Secondary channel

Possible settings with ThermoCouple mode:

- "Disabled" (default)
- "CurrentOut"

ERROR

Error messages with ThermoCouple mode:

- Threshold values for upper or lower limit of the measuring range exceeded
- Threshold values for upper or lower limit exceeded
- Cable break

Events

Event messages with ThermoCouple mode:

- Threshold values for upper or lower limit exceeded

6.5.5.9 Channel mode TempSensor

Channel mode for primary channel: Temperature measuring with thermocouples (platinum resistors)

Parameter

Parameter	Values	Description
"Sensor mode"	PT100/2 (Pt100 resistor, 2-wire technology) (default) PT100/3 (Pt100 resistor, 3-wire technology) PT100/4 (Pt100 resistor, 4-wire technology) PT1000/2 (Pt1000 resistor, 2-wire technology) PT1000/3 (Pt1000 resistor, 3-wire technology) PT1000/4 (Pt1000 resistor, 4-wire technology)	Setting of the thermocouple used and the connection type
"Enable interpolation"	Active Inactive (default)	If this function is enabled, read values are interpolated between 2 actual sample times. The interpolation results in a higher latency time.
"Filter"	1kHz 500Hz 250Hz 125Hz 62.5Hz 31.2Hz (default) 15.6Hz 7.8Hz 3.9Hz 1.9Hz 0.97Hz	Setting of the limit frequency for temperature measuring → *Table 379 "GIO212 – Dependency of latency time and sample rate on setting of the cut-off frequency and optional switchable interpolation (ITP) for temperature measurement", Page 4-594*
"Upper limit [K]"	Value range: 173.15K to 1073.15K Default: 1073.15K	The use of the upper limit must be enabled via the associated check box
"Lower limit [K]"	Value range: 173.15K to 1073.15K Default: 173.15K	When using the lower limit, activation takes place via the associated check box.
"Limit as Error"	Enabled	Exceeding the set limits is signaled as error (error status / error interrupt).
	Disabled (default)	Exceeding the set limits is signaled as event (event status / event interrupt).
"Sync IO"	Active Inactive (default)	Active: Register value is updated with an edge from the Sync signal Inactive: Register value is updated cyclically according to the update cycle (see Base configuration).
"Disable Errors"	Active Inactive (default)	If this function is enabled, error messages of the channel are suppressed.
"Scale type"	→ *Chapter 10.4.1 "Configuring I/O channel scaling", Page 13-271*	

Tab. 273: AIO208/216 – Parameters for channel mode TempSensor

Temperature measurement

fg [Hz], approx.		1000	500	250	125	62.5
Without ITP	td [ms]	0.961	1.922	3.844	7.688	15.38
	Sample rate [S/s]	3,906	1,953	977	488	244
With ITP	td [ms]	1.921	3.384	7.68	15.37	30.74
	Sample rate [S/s]	4,000,000	2,000,000	1,000,000	500,000	250,000

fg [Hz], approx.		31.2	15.6	7.8	3.9	1.9	0.97
Without ITP	td [ms]	30.75	61.50	123.0	246.0	493.0	984.1
	Sample rate [S/s]	122	61	30.5	15.3	7.63	3.81
With ITP	td [ms]	61.47	122.9	245.9	491.8	983.6	1967
	Sample rate [S/s]	125,000	62,500	31,250	15,625	7,813	3,906

Tab. 274: AIO208/216 – Dependency of latency time and sample rate on setting of the cut-off frequency and optional switchable interpolation (ITP) for temperature measurement

Secondary channel

With the TempSensor setting, the secondary channel is assigned and can not therefore be used separately.

ERROR

Error messages with TempSensor mode:

- Threshold values for upper or lower limit of the measuring range exceeded
- Threshold values for upper or lower limit exceeded
- Cable break

Events

Event messages with TempSensor mode:

- Threshold values for upper or lower limit exceeded

6.5.6 Configuration

The configurator is divided into 2 sections:

Area	Description
"Basic configuration"	Configuration of module parameters. Allows the base configuration of primary channels, the issuing of channel names and loading of templates for the channels.
Channel configuration ("Primary channels XX - YY")	The channel configuration is divided up into several groups. Each group consists of two primary and two secondary channels which can be configured.

Tab. 275: AIO208/216 – Areas of the module configuration

Opening the module configurator

Use Device Manager for the configuration.

→ *Chapter 10.4 "Configuring a hardware module", Page 13-269*

▶ Double-click the hardware module in navigator view.

➔ Configurator view opens.

The group "Basic configuration" is selected by default.

6.5.6.1 Completing the base configuration

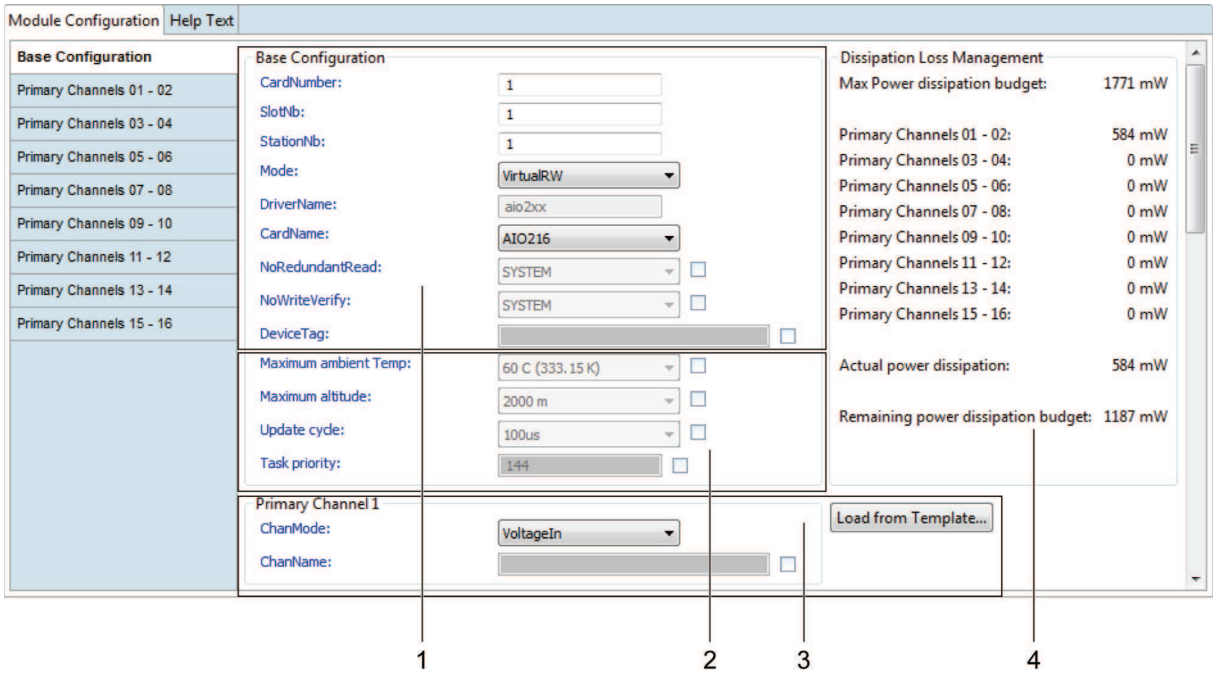

Fig. 143: Base configuration for module AIO208/216

1) Default parameters for the module configuration
2) GIO-specific module parameter
3) Basic settings for primary channels
4) Overview of power dissipation management



For power dissipation management see: (➔ *Chapter 6.5.6.3, Page 4-417*)

Requirements

Configurator view must have been opened.

Procedure:

1. Make changes.

   For detailed information on the channels and channel modes see (➔ *Chapter 6.5.5.1, Page 4-390*).

   If templates were defined for channel functions, these can be used directly on the corresponding channel (➔ *Chapter 6.5.6.4, Page 4-419*).
2. Save changes.

The configuration is entered in the `mconfig.ini` file (→ *Chapter 5, Page 17-149*).

Parameter [1)]	Description / possible values		Default
CardNumber	Defines the logical module number by which the application programs address the module. Is assigned automatically, but an application specific value can also be entered. Every CardNumber assigned in the system must be unique. Allowed values: 1 to 32,000		Slot Number
SlotNb	Defines the slot number Is assigned automatically, however a user-specific value can also be entered. Allowable values: 1 to 16		Not configurable
StationNb	Defines the station number Is assigned automatically, however a user-specific value can also be entered. Allowable values: 1 to 16		Not configurable
Mode	Operating mode of the module; possible values:		`Real`
	Real	Real hardware module that is mounted on the M1 controller	
	Virtual	Hardware module physically not present on the M1 controller. Input channels can only be read, output channels can be read and written	
	VirtualRW	Hardware module physically not present on the M1 controller. Input and output channels can be read and written	
DriverName	The name of the module driver that is used to check the MIO-handler. Is added automatically (cannot be configured).		–
CardName	Used to select the module variant type. Depending on the selected module, different keywords are hidden or revealed. In virtual operation **CardName** determines which module variant will be simulated.		–

Parameter [1)]	Description / possible values	Default
NoRedundantRead	Configures redundant reading of all read accesses to the module. Allowable values: • ON – Only one read operation is performed. • OFF – All read operations are performed ≥2 times. 2 identical value are the result of the read operation. If both read results are not identical, a third read access will be triggered immediately. • SYSTEM – The global system setting is used.	(disabled)
NoWriteVerify	Overwrites the global setting of reading inputs back for this module. • ON – No reading back of the outputs is performed • OFF – A written value is always read back, regardless of what the global setting in the group (IO-system) is • SYSTEM – The global system setting is used.	"SYSTEM" (disabled)
DeviceTag (optional)	Device tag of the hardware module Permitted number of characters: 63	(disabled)
Overview (über die Kanäle)	In this range, every channel can be enabled/disabled and the symbolic channel name can be modified. ChanNameX: Optional symbolic designation for a channel Permitted number of characters: 63 Default values: • Channel 1 • Channel 2 • Channel 3 • Channel 4	–
[1)] Name of parameter (SolutionCenter) and keyword (`mconfig.ini`) are identical		

Parameter	Value range	Default value	Description
"Maximum ambient temperature"	45 °C (318.15 K) 50 °C (323.15 K) 55 °C (328.15 K) 60 °C (333.15 K)	60 °C (333.15 K)	Maximum ambient temperature to which the module is exposed in operation. This parameter has a direct influence on the maximum power dissipation budget available (→ *Chapter 6.5.6.3, Page 4-417*).
"Maximum altitude"	2000 m 2500 m 3000 m 3500 m 4000 m 4500 m	2000 m	Maximum altitude (above sea level) at which the module can be used. This parameter has a direct influence on the maximum power dissipation budget available (→ *Chapter 6.5.6.3, Page 4-417*). The basis is a derating of -0.5 kelvin per 100 m at altitudes above 2000 m.
"Update cycle"	**min. cycle time** **100µs**	100 µs	Setting of the update cycle by which the process data in the module is updated. Depending on the configuration of the individual channels. The **min. cycle time** setting causes the process data to be updated as quickly as possible. A setting of **100µs** will cause a cycle time of 100 µs to be kept irrespective of the configuration. If the cycle time can not be kept with the existing configuration, an entry is generated in the log book and output on the boot console.
"Task priority"	0 to 255	144	Set the priority of the task for automatic cold spot compensation. If there are multiple modules and different task priorities, the higher priority (lower number) is used.

Tab. 276: AIO208/216 – Module specific parameters

6.5.6.2 Completing the channel configuration

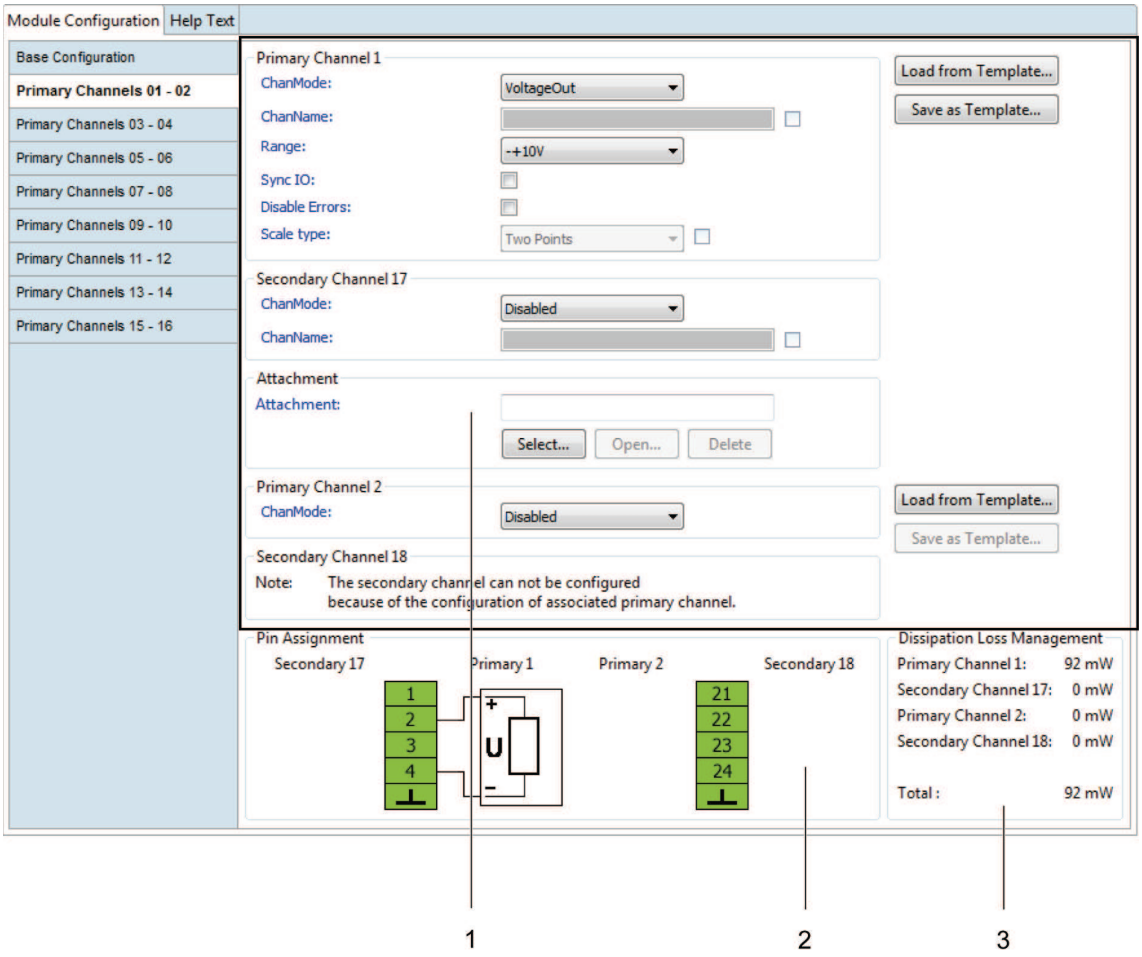

Fig. 144: Channel configuration for module AIO208/216

1) Channel settings

2) Graphical representation of the pin assignment according to the set channel modes

3) Representation of the power dissipation values according to the set channel values

In each group of the channel configuration ("primary channels XX - YY"), two primary channels and the associated secondary channels can be configured.

This View allows all the available channel modes to be set. The content for the other settings is dynamically generated and displayed depending on the channel mode selected.

Requirements

Configurator view must have been opened.

Procedure:

1. Open the group for the channel to be configured.

2. Configure the channels (1).

   For detailed information on the channels and channel modes see (→ *Chapter 6.5.5.1, Page 4-390*).

   If templates were defined for channel functions, these can be used directly on the corresponding channel (→ *Chapter 6.5.6.4, Page 4-419*).

6.5.6.2.1 Display of the jack allocation

A simple graphic below the channel settings shows the pin assignment for the primary and secondary channels. Depending on the channel mode set, this illustrates the pins to which the actuators and sensors are to be wired (2, see (→ *Figure 144, Page 4-415*)).

Example 1

A primary channel and the associated secondary channel are configured:

Primary channel 1 with channel mode **VoltageIn**

Secondary channel 17 with channel mode **CurrentOut**

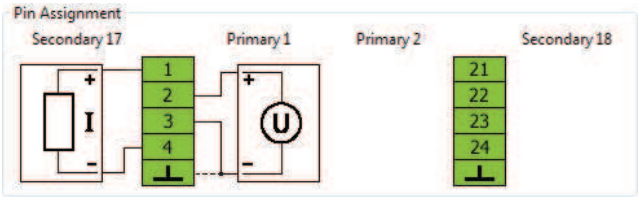

Fig. 145: Representation of the pin assignment for a configured primary and secondary channel (example)

The connection shown as a dotted line must only be implemented for galvanically isolated sensors or undefined (floating) potentials.

Example 2

Both primary channels and the associated secondary channels are configured:

Primary channel 1 with channel mode **CurrentIn**

Secondary channel 17 with channel mode **CurrentOut**

Primary channel 2 with channel mode **CurrentOut**

Secondary channel 18 with channel mode **VoltageIn**

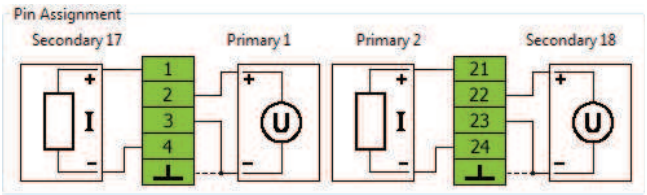

Fig. 146: Representation of the pin assignment for two configured primary and secondary channels (example)

The connection shown as a dotted line must only be implemented for galvanically isolated sensors or undefined (floating) potentials.

6.5.6.3 Dissipation loss management

The modules AIO208 and AIO216 allow the setting of different inputs and outputs. It is therefore necessary to take into account the power dissipation inside the module.

The power dissipation expected is calculated automatically during the configuration and shown in the configurator. A warning is generated if the power dissipation of all the channels of a module exceeds a predefined limit. This is indicated by a warning in the base configuration, entered in the log book and output on the boot console.



The power dissipation values shown are only guide values as they depend on different factors (e.g. external power supply, external loads).

Display in the configurator

The power dissipation values of all channels are shown together in the "Base Configuration" group. The power dissipation values of all channels are added together and shown as the "Actual power dissipation".

The remaining power dissipation budget is calculated and displayed depending on the maximum power dissipation budget.

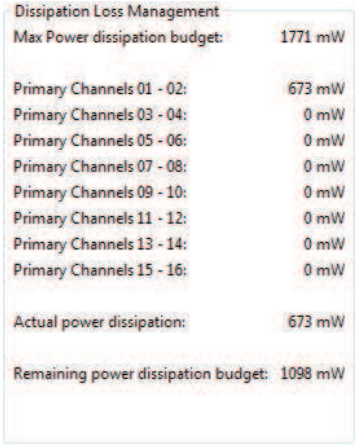

Fig. 147: Dissipation loss management in the "Base Configuration" group

The power dissipation expected for the individual channels is shown in each tab, it depends on the channel mode set.

The total power dissipation of both primary channels and both secondary channels of the selected group is calculated and displayed as a "Total".

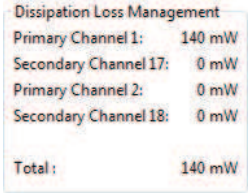

Fig. 148: Dissipation loss management in the "Primary channels XX - YY" group

6.5.6.3.1 Controlling the power dissipation budget (derating parameter)

The "Maximum ambient Temp" and "Maximum altitude" settings are used to control the maximum power dissipation budget.

These 2 settings are optional and must first be activated by enabling the corresponding checkbox. An entry is created in the log book and is output on the boot console if these parameters are changed (deviation from the default setting).

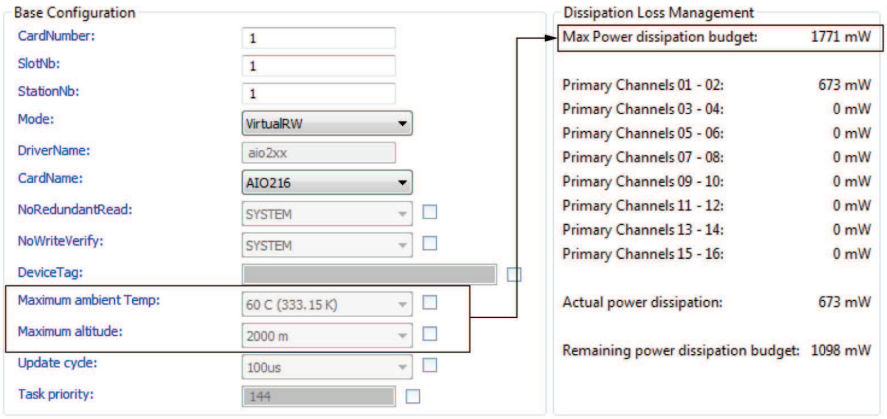

Fig. 149: Parameters that have an effect on the maximum dissipation loss management

6.5.6.4 Working with templates

Creating templates

Individual configurations can be stored as templates in order to simplify channel configuration.

Procedure:

1. Open Configurator View and complete the channel configuration (see (→ *Chapter 6.11.6.2, Page 4-601*))

   – or –

   Open an existing channel configuration.
2. Click the <Save as Template...> button

   ➔ The "Save Channel Template" dialog opens.
3. Select the folder and enter the name for the new template.
4. Confirm with <Finish>.

A template contains a primary and secondary configuration. Configurations requiring two primary channels are exceptions to this (see (→ *Chapter 6.11.5.2.1.3, Page 4-546*)). In this case, two primary and two secondary channels are stored.

If attachments are defined for a channel, these are also copied from the controller to the templates.



All parameters in a template can be edited. A template can therefore be changed after it has been created.

Editing templates

Procedure:

1. Select the "My Templates" folder of the Solution project in the Navigator view.
2. Double-click on the template to be edited.

   ➔ The configurator view opens.
3. Edit the template parameters in the "Channel Configuration" tab.

   A description can also be created in the "Description" tab in addition to the normal configuration.

Loading templates

Templates can be loaded in two different ways:

- On the base configuration page (see (→ *Chapter 6.11.6.1, Page 4-597*)).
- On the channel configuration page (see (→ *Chapter 6.11.6.2, Page 4-601*)).

Procedure:

1. Open Configurator view.
2. Click the <Load from Template...> button

   ➔ The "Load Channel Template" dialog is opened.

3.

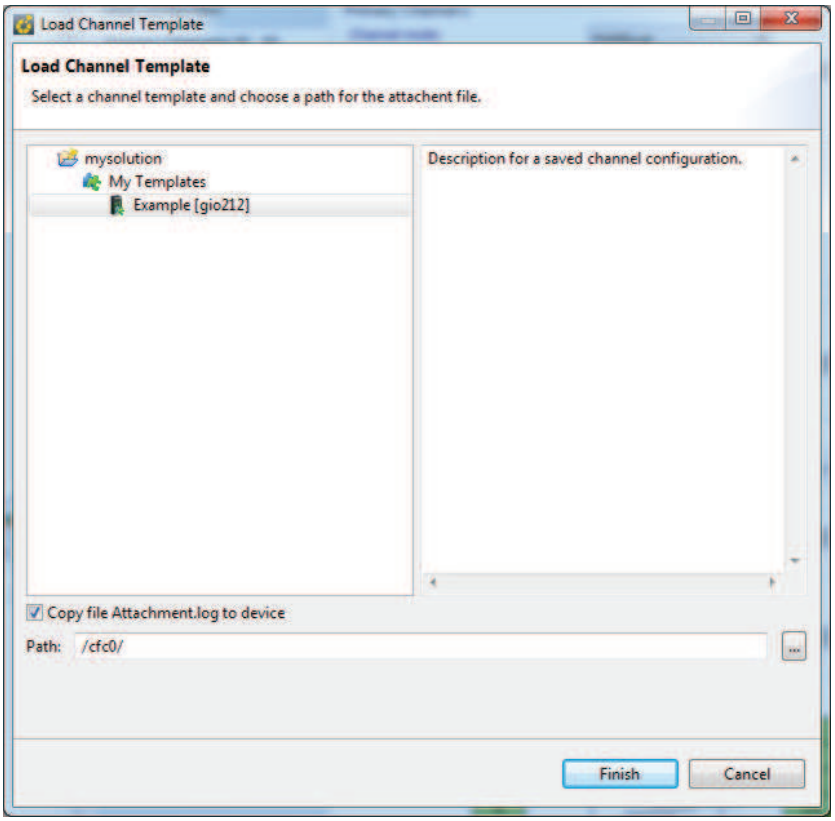

Select the channel template to be imported. Configure an optional path to where the attachment of the selected channel template is to be copied.

4. Confirm with <Finish>.

6.5.6.5 Exporting the PDF

For the modules AIO208 and AIO216, the entry **PDF Export** is shown in "Device Navigator" View in the context menu of the hardware module.

The following information is shown in the PDF:

- Main configuration
- Dissipation loss management
- All channel configurations showing the appropriate pin assignment
- Paths of the attachments

Procedure:

1. Highlight the hardware module in the "Device Navigator" view and select **PDF Export** from the context menu.
   ➔ The "Save as" dialog opens.
2. Select and confirm memory location.
   ➔ The PDF is generated and stored at the selected memory location.



Only the changes stored in the configurator are exported!

6.5.7 Application programming interface (API) – AIO208/AIO216

Description of the programming interface see **API-Documentation**, section **MSys** > **Modules** > **I/O-Drivers**.

6.5.8 Application examples

6.5.8.1 Strain gauge sensors with the AIO208, AIO216 and GIO212 modules

6.5.8.1.1 Connection of a strain gauge bridge in a 4-wire connection

In order to connect a strain gauge sensor (e.g. for weighing cells) in a 4-wire connection, 2 primary channels are required.

- The 1. channel is configured for voltage measuring and supplies the actual measured value of the strain gauge bridge.
- The 2. channel is configured as a voltage output (`0-10V SensorSupply`) and supplies the power for the strain gauge bridge.

  The power supply for the bridge must be selected so that the maximum permissible Common Mode range for voltage measuring is not exceeded.

Wiring diagram

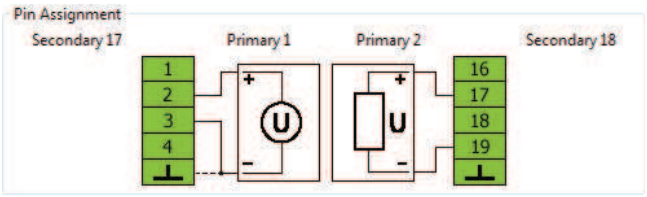

Configuration

Use Device Manager for the configuration.

→ *Chapter 10.4 "Configuring a hardware module", Page 13-269*

Procedure:

1. Double-click the hardware module in navigator view.

   ➔ Configurator view opens.

   The group "Basic configuration" is selected by default.
2. Open group "Primary channels 01 to 02".

3. Configure channels as specified in the tables below.

Settings for Primary channel 1:

Parameter	Value
Channel mode	VoltageIn
Channel name	DMS_Messwert
Measuring range	-+100mV
Enable interpolation	Disabled
Filter	31.2Hz
Sync IO	Disabled
Disable Errors	Disabled

Settings for Primary channel 2:

Parameter	Value
Channel mode	VoltageOut
Channel name	DMS_Brueckenversorgung
Range	0-10V SensorSupply
Sync IO	Disabled
Disable Errors	Disabled

6.5.8.1.2 Calculation example with weighing cell 1-Z6FC3/10KG-1 from HBM

If the weighing cell is connected as shown under (→ *Chapter 6.5.8.1.1, Page 4-422*) to a AIO208, AIO216 or GIO212 module, the measured values correspond to the mass present on the weighing cell.

Characteristics of the strain gauge weighing cell:

- Nominal load: 10 kg
- Gauge factor: 2 mV/V
- Supply voltage of bridge: 5 V (with `DMS_Brueckenversorgung` channel set)

With these characteristics the weighing cell at the nominal load (10 kg) supplies the following voltage value:`2 mV/V * 5 V = 10 mV`

With an ideal strain gauge bridge, the characteristic is a straight line through zero.

This therefore results in further points, such as the following:

```
1 kg -> 1 mV
2 kg -> 2 mV
...
```



This simplified theoretical consideration only applies however to an ideal measuring system. As not only the AIO/GIO channels but also the strain gauge bridges have tolerances (offset, gain), the calibration of the entire measuring system after installation is recommended.

This calculation must be carried out in the application and essentially consists of an adjustment of the offset (taring) and the gain (= gradient of the straight line e-> normalization).

6.5.8.1.3 PLC code example

Wiring diagram

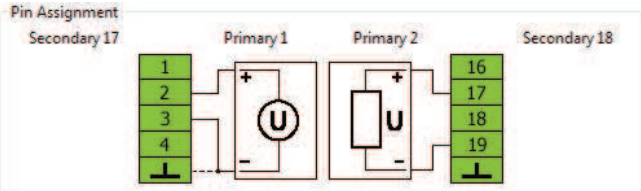

Configuration for code example

Use Device Manager for the configuration.

→ *Chapter 10.4 "Configuring a hardware module", Page 13-269*

Procedure:

1. Double-click the hardware module in navigator view.
   ➔ Configurator view opens.
   The group "Basic configuration" is selected by default.
2. Open group "Primary channels 01 to 02".

3. Configure channels as specified in the tables below.

Settings for Primary channel 1:

Parameter	Value
Channel mode	VoltageIn
Channel name	MeasureValue_DMS_RAW
Measuring range	-+100mV
Enable interpolation	Disabled
Filter	31.2Hz
Sync IO	Disabled
Disable Errors	Disabled
Scale type	LinearR64 2P
Scaling parameters	-100.0,-100.0;100.0,100.0
Scaled channel name	MeasureValue_DMS

Settings for Primary channel 2:

Parameter	Value
Channel mode	VoltageOut
Channel name	Supply_DMS_RAW
Range	0-10V SensorSupply
Sync IO	Disabled
Disable Errors	Disabled
Scale type	LinearR64 2P
Scaling parameters	0.0,0.0;10.0,10.0
Scaled channel name	Supply_DMS

PLC code

```
PROGRAM PLC_PRG
VAR
  ActValue    :  REAL;           (* measured load (kg) *)
  Emax        :  REAL := 10.0;   (* max. measure range of the DMS-Bridge (kg)
  Cn          :  REAL := 2.0;    (* sensitivy of the DMS-Bridge (mV/V) *)
  Offset      :  REAL := -0.1;   (* offset for the DMS-Bridge *)
  DMS_SuppV   :  REAL := 5.0;    (* supply for the DMS-Bridge *)
ENDVAR


(* Supply for DMS *)
Supply_DMS := DMS_SuppV;

(* calculate the DMS Value *)
ActValue := LREAL_TO_REAL(MeasureValue_DMS + Offset) / (Cn * Supply_DMS / 10
```

6.5.8.1.4 Connection of a strain gauge bridge in a 6-wire connection

AIO208, AIO216 or GIO212 modules also offer the possibility to implement a 6-wire measuring system with 3 primary channels. One channel here is used as the voltage supply for the bridge. The two other channels measure the actual strain gauge voltage and also the supply voltage on the bridge. This makes it possible to correct any voltage drops on the supply lines to the bridge.

It is also possible for the voltage supply for the bridge to be provided externally, i.e. not from the measuring module. In this case only two primary channels are required for the 6-wire connection.

NOTICE

Incorrect measured values due to too high voltage values.

▶ Do not exceed the maximum permissible CommonMode range for the voltage measuring.

6.5.9 Overview – representation of the measured values

Overview table see:

→ *Chapter 6.11.9 "Overview – representation of the measured values", Page 4-609*